**Di.Mo.Re.s.r.l.**
Sede Legale: Via Oberdan1/A - 25128 Brescia
Telefono : 030 7283039
Email: info@dimore-strutture.com
Codice Fiscale e Partita IVA 03472670987
REA BS 537054 - Registro Imprese BS,

PROGETTISTA: Ing. Alessandro Poli

COLLABORATORI: Ing. Melani Vidic
Ingg. Luca Tucci - A. Baselli
Ing. Nicola Bettini

# COMUNE DI MUSCOLINE

Provincia di Brescia

COMMITTENTE:
COMUNE DI MUSCOLINE - Via Paolo VI - Muscoline (BS)

# PROGETTO DEFINITIVO - ESECUTIVO

## ADEGUAMENTO SISMICO DELLA SCUOLA PRIMARIA DI MUSCOLINE

OGGETTO:

## FASCICOLO DEI CALCOLI DELLE STRUTTURE

TAVOLA:

d.S.03

DATA:

15/06/2020

AGGIORNAMENTO:

TIMBRO E FIRMA:

| | |
|---|---|
| Doc: | C0256/19 Intervento rinforzo Scuola Primaria Muscoline (BS) |
| Data: | 15/06/2020 |
| N. Pagine: | 531 |

**Committente: Comune di Muscoline (BS)**

**Località: Muscoline (BS)**

**Tipologia prestazione: PROGETTO DEFINITIVO-ESECUTIVO**

# PROGETTO DI ADEGUAMENTO SISMICO SCUOLA PRIMARIA DI MUSCOLINE (BS)

# FASCICOLO DEI CALCOLI


**Progettista strutturale: Ing. A. Poli**

Iscritto all'Ordine Ingegneri Provincia di Brescia al n. 3081 - Direttore Tecnico Di.Mo.Re

| Rev. | Data | Responsabili | Collaboratori |
|---|---|---|---|
| 00 | 15/06/2020 | **Ing. A. Poli** | **Ing. M. Vidic**<br>**Ingg. L.Tucci – A. Baselli**<br>**Ing. N. Bettini** |


***Di.Mo.Re. s.r.l.***
Sede Legale: Via Oberdan 1/A - 25128 Brescia
Capitale Sociale 10.000 euro i.v.
REA BS 537054 - Registro Imprese BS, Codice Fiscale e Partita IVA 03472670987

# INDICE

**1. ANALISI DI VULNERABILITA' ..... 4**
1.1. Valutazione della sicurezza statica ..... 4
1.1.1 Corpo A ..... 4
1.1.2 Corpo B – Allineamento C ..... 6
1.2. Verifica di vulnerabilità sismica – meccanismi locali ..... 9
1.2.1 Corpo A ..... 9
1.2.2 Corpo B ..... 11
1.3. Verifica di vulnerabilità sismica – push over ..... 13
1.3.1 Corpo A ..... 13
1.3.2 Corpo B ..... 90
1.3.3 Allineamento C ..... 158
**2. PROGETTO DI INTERVENTO (ADEGUAMENTO SISMICO) ..... 200**
2.1. Reticolare atrio ..... 200
2.2. Corpo A ..... 265
2.2.1 Intonaco armato ..... 265
2.2.2 Diaframma – catene ..... 343
2.3. Corpo B ..... 344
2.3.1 Intonaco armato e nuovo sistema sismo-resistente ..... 344
2.4. Allineamento C ..... 432
2.4.1 Nuovo sistema sismoresistente ..... 432
2.5. Rinforzo terrazzo ..... 481
2.6. Rinforzo tettoia ..... 496

# 1. ANALISI DI VULNERABILITA'

## 1.1. Valutazione della sicurezza statica

### *1.1.1 Corpo A*

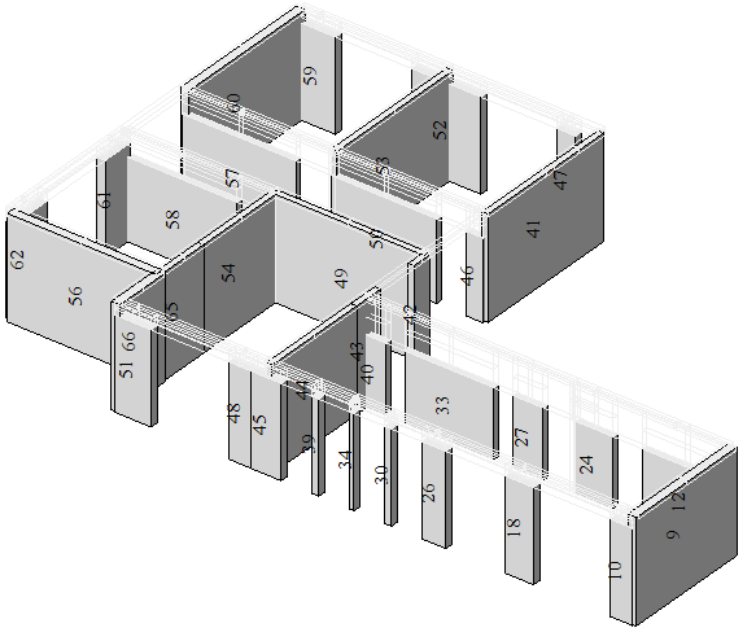


*Figura 1 - Numerazione maschi murari – Corpo A.*

| MURATURA M1 - VERIFICA PRESSO-FLESSIONE | | | |
|---|---|---|---|
| **N El** | **Sforzo normale sollecitante ($N/cm^2$)** | **Indice di sicurezza** | **Verifica** |
| 9 | 11 | 2.78 | VERIFICATO |
| 10 | 32 | 1.95 | VERIFICATO |
| 18 | 36 | 1.72 | VERIFICATO |
| 26 | 33 | 1.88 | VERIFICATO |
| 30 | 55 | 1.13 | VERIFICATO |
| 34 | 69 | 1.02 | VERIFICATO |
| 39 | 59 | 1.06 | VERIFICATO |
| 40 | 23 | 1.39 | VERIFICATO |
| 41 | 13 | 1.90 | VERIFICATO |
| 42 | 49 | 1.26 | VERIFICATO |
| 43 | 36 | 1.72 | VERIFICATO |
| 44 | 16 | 1.53 | VERIFICATO |
| 45 | 24 | 1.33 | VERIFICATO |
| 46 | 57 | 1.17 | VERIFICATO |
| 47 | 58 | 1.08 | VERIFICATO |

| | | | |
|---|---|---|---|
| 48 | 18 | 1.77 | VERIFICATO |
| 50 | 21 | 2.27 | VERIFICATO |
| 51 | 17 | 1.87 | VERIFICATO |
| 52 | 26 | 2.38 | VERIFICATO |
| 54 | 27 | 1.74 | VERIFICATO |
| 56 | 11 | 2.91 | VERIFICATO |
| 57 | 24 | 1.97 | VERIFICATO |
| 58 | 18 | 1.34 | VERIFICATO |
| 59 | 30 | 2.11 | VERIFICATO |
| 60 | 11 | 2.82 | VERIFICATO |
| 61 | 32 | 1.93 | VERIFICATO |
| 62 | 27 | 2.32 | VERIFICATO |
| 65 | 32 | 1.40 | VERIFICATO |
| 66 | 17 | 3.32 | VERIFICATO |

| MURATURA M1 - VERIFICA COEFFICIENTE PARZIALE DI SICUREZZA | | | |
|---|---|---|---|
| **N El** | **Sforzo normale sollecitante ($N/cm^2$)** | **Indice di sicurezza** | **Verifica** |
| 9 | 31 | 8.33 | VERIFICATO |
| 10 | 44 | 5.84 | VERIFICATO |
| 18 | 49 | 5.17 | VERIFICATO |
| 26 | 45 | 5.63 | VERIFICATO |
| 30 | 75 | 3.40 | VERIFICATO |
| 34 | 84 | 3.05 | VERIFICATO |
| 39 | 80 | 3.19 | VERIFICATO |
| 40 | 61 | 4.18 | VERIFICATO |
| 41 | 45 | 5.70 | VERIFICATO |
| 42 | 68 | 3.78 | VERIFICATO |
| 43 | 50 | 5.16 | VERIFICATO |
| 44 | 56 | 4.60 | VERIFICATO |
| 45 | 64 | 3.99 | VERIFICATO |
| 46 | 73 | 3.52 | VERIFICATO |
| 47 | 79 | 3.23 | VERIFICATO |
| 48 | 48 | 5.32 | VERIFICATO |
| 50 | 38 | 6.80 | VERIFICATO |
| 51 | 46 | 5.60 | VERIFICATO |
| 52 | 36 | 7.13 | VERIFICATO |
| 54 | 49 | 5.21 | VERIFICATO |
| 56 | 29 | 8.72 | VERIFICATO |
| 57 | 43 | 5.91 | VERIFICATO |
| 58 | 64 | 4.02 | VERIFICATO |
| 59 | 40 | 6.32 | VERIFICATO |
| 60 | 30 | 8.45 | VERIFICATO |
| 61 | 44 | 5.79 | VERIFICATO |
| 62 | 37 | 6.96 | VERIFICATO |
| 65 | 61 | 4.20 | VERIFICATO |
| 66 | 26 | 9.95 | VERIFICATO |

| MURATURA M1 - VERIFICA ELASTICA | | | |
|---|---|---|---|
| **N El** | **Sforzo normale sollecitante ($N/cm^2$)** | **Indice di sicurezza** | **Verifica** |
| 12 | 22 | 1.61 | VERIFICATO |
| 24 | 58 | 1.18 | VERIFICATO |
| 27 | 50 | 1.39 | VERIFICATO |
| 33 | 33 | 1.38 | VERIFICATO |
| 49 | 13 | 2.60 | VERIFICATO |
| 53 | 19 | 1.78 | VERIFICATO |

| MURATURA M1 - VERIFICA PLASTICA | | | |
|---|---|---|---|
| **N El** | **Sforzo normale sollecitante ($N/cm^2$)** | **Indice di sicurezza** | **Verifica** |
| 12 | 77 | 4.82 | VERIFICATO |
| 24 | 104 | 3.55 | VERIFICATO |
| 27 | 89 | 4.16 | VERIFICATO |
| 33 | 89 | 4.15 | VERIFICATO |
| 49 | 47 | 7.80 | VERIFICATO |
| 53 | 69 | 5.35 | VERIFICATO |

### *1.1.2 Corpo B – Allineamento C*

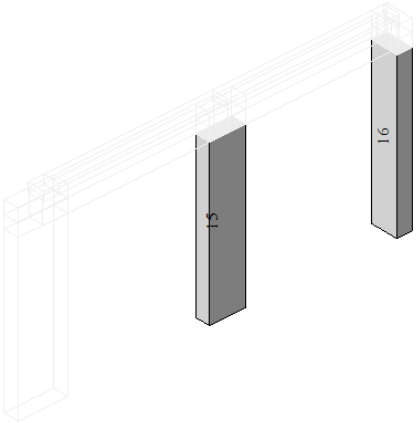


*Figura 2 - Numerazione maschi murari - allineamento C.*

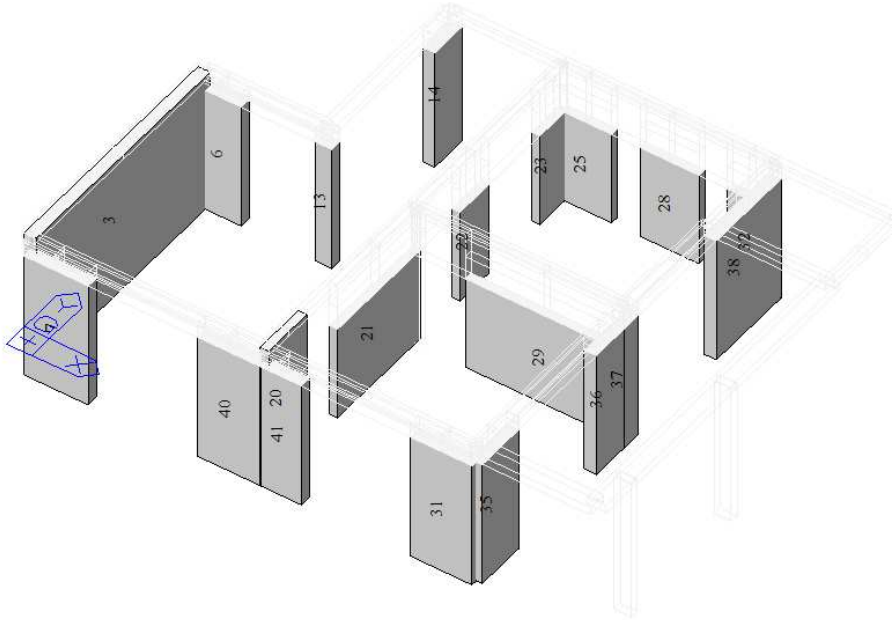


*Figura 3 - Numerazione maschi murari – Copro B .*

| MURATURA M1 - VERIFICA ELASTICA | | | |
|---|---|---|---|
| **N EI** | **Sforzo normale sollecitante ($N/cm^2$)** | **Indice di sicurezza** | **Verifica** |
| 3 | 14 | 2.25 | VERIFICATO |
| 6 | 25 | 2.47 | VERIFICATO |
| 7 | 22 | 2.82 | VERIFICATO |
| 13 | 40 | 1.54 | VERIFICATO |
| 14 | 51 | 1.22 | VERIFICATO |
| 20 | 35 | 1.35 | VERIFICATO |
| 21 | 24 | 2.02 | VERIFICATO |
| 22 | 43 | 1.11 | VERIFICATO |
| 23 | 48 | 1.39 | VERIFICATO |
| 31 | 15 | 4.11 | VERIFICATO |
| 35 | 33 | 1.46 | VERIFICATO |
| 36 | 36 | 1.33 | VERIFICATO |
| 37 | 56 | 1.19 | VERIFICATO |
| 38 | 32 | 1.97 | VERIFICATO |
| 41 | 21 | 1.53 | VERIFICATO |
| 15 | 29 | 1.10 | VERIFICATO |
| 16 | 21 | 1.51 | VERIFICATO |

| MURATURA M1 - VERIFICA PLASTICA | | | |
|---|---|---|---|
| **N EI** | **Sforzo normale sollecitante ($N/cm^2$)** | **Indice di sicurezza** | **Verifica** |
| 3 | 38 | 6.74 | VERIFICATO |
| 6 | 35 | 7.40 | VERIFICATO |
| 7 | 30 | 8.46 | VERIFICATO |

| | | | |
|---|---|---|---|
| 13 | 55 | 4.61 | VERIFICATO |
| 14 | 70 | 3.67 | VERIFICATO |
| 20 | 63 | 4.06 | VERIFICATO |
| 21 | 42 | 6.06 | VERIFICATO |
| 22 | 77 | 3.32 | VERIFICATO |
| 23 | 61 | 4.17 | VERIFICATO |
| 31 | 21 | 12.33 | VERIFICATO |
| 35 | 58 | 4.39 | VERIFICATO |
| 36 | 64 | 3.99 | VERIFICATO |
| 37 | 72 | 3.57 | VERIFICATO |
| 38 | 43 | 5.90 | VERIFICATO |
| 41 | 56 | 4.58 | VERIFICATO |
| 15 | 77 | 3.31 | VERIFICATO |
| 16 | 56 | 4.54 | VERIFICATO |

| MURATURA M1 - VERIFICA ELASTICA | | | |
|---|---|---|---|
| **N El** | **Sforzo normale sollecitante ($N/cm^2$)** | **Indice di sicurezza** | **Verifica** |
| 25 | 30 | 1.14 | VERIFICATO |
| 28 | 30 | 1.15 | VERIFICATO |
| 29 | 16 | 2.17 | VERIFICATO |
| 32 | 38 | 1.21 | VERIFICATO |
| 40 | 13 | 2.67 | VERIFICATO |

| MURATURA M1 - VERIFICA PLASTICA | | | |
|---|---|---|---|
| **N El** | **Sforzo normale sollecitante ($N/cm^2$)** | **Indice di sicurezza** | **Verifica** |
| 25 | 109 | 3.41 | VERIFICATO |
| 28 | 107 | 3.46 | VERIFICATO |
| 29 | 57 | 6.50 | VERIFICATO |
| 32 | 102 | 3.62 | VERIFICATO |
| 40 | 46 | 8.02 | VERIFICATO |

## 1.2. Verifica di vulnerabilità sismica – meccanismi locali

### *1.2.1 Corpo A*

| Elevazione | GEOMETRIA DELLA FACCIATA (*) | | | | | Peso specifico della muratura $\gamma_i$ [kN/m$^3$] | Arretramento della cerniera attorno alla quale avviene il ribaltamento rispetto al lembo esterno della parete [m] |
|---|---|---|---|---|---|---|---|
| | Altezza delle fasce murarie | | Larghezza delle fasce murarie | | | | |
| | Quota del sottofinestra [m] | Quota del soprafinestra [m] | Larghezza della fascia sottofinestra al netto delle aperture [m] | Larghezza della fascia intermedia al netto delle aperture [m] | Larghezza della fascia soprafinestra al netto delle aperture [m] | | |
| 1 | 3.05 | | 3.00 | | | 18.0 | 0.05 |
| 2 | | | | | | | |
| 3 | | | | | | | |
| 4 | | | | | | | |

| CARATTERIZZAZIONE GEOMETRICA DEI MACROELEMENTI | | | | | | | |
|---|---|---|---|---|---|---|---|
| Elevazione | Spessore della parete al piano i-esimo $s_i$ [m] | Altezza di interpiano al piano i-esimo $h_i$ [m] | Braccio orizzontale del carico del solaio al piano i-esimo rispetto alla cerniera cilindrica $d_i$ [m] | Braccio orizzontale dell'azione di archi o volte al piano i-esimo rispetto alla cerniera cilindrica $d_{Vi}$ [m] | Quota del punto di applicazione di azioni trasmesse da archi o volte al piano i-esimo $h_{Vi}$ [m] | Quota del baricentro della parete al piano i-esimo $y_{Gi}$ [m] | Quota del baricentro della parete al piano i-esimo (**) $y_{Gi}$ [m] |
| 1 | 0.36 | 3.05 | 0.31 | | | 1.53 | |
| 2 | | | | | | 0.00 | |
| 3 | | | | | | | |
| 4 | | | | | | 0.00 | |

| AZIONI SUI MACROELEMENTI | | | | | | | |
|---|---|---|---|---|---|---|---|
| Elevazione | Peso proprio della parete al piano i-esimo $W_i$ [kN] | Peso proprio della parete al piano i-esimo (**) $W_i$ [kN] | Carico trasmesso dal solaio al piano i-esimo $P_{Si}$ [kN] | Spinta statica della copertura $P_H$ [kN] | Componente verticale della spinta di archi o volte al piano i-esimo $F_{Vi}$ [kN] | Componente orizzontale della spinta di archi o volte al piano i-esimo $F_{Hi}$ [kN] | Azione del tirante al piano i-esimo $T_i$ [kN] |
| 1 | 59.3 | | 39.9 | | | | |
| 2 | 0.0 | | 0.0 | | | | |
| 3 | 0.0 | | | | | | |
| 4 | 0.0 | | | | | | |

**DATI DI CALCOLO**

| MOMENTO DELLE AZIONI STABILIZZANTI | | | | | |
|---|---|---|---|---|---|
| Ribaltamento delle elevazioni: | Peso proprio delle pareti [kNm] | Carico dei solai [kNm] | Azione di archi o volte [kNm] | Azione dei tiranti [kNm] | |
| 1 | 7.7 | 10.4 | 0.0 | 0.0 | |
| - | 0.0 | 0.0 | 0.0 | 0.0 | |
| - | 0.0 | 0.0 | 0.0 | 0.0 | |
| - | 0.0 | 0.0 | 0.0 | 0.0 | |

| MOMENTO DELLE AZIONI RIBALTANTI | | | | | |
|---|---|---|---|---|---|
| Ribaltamento delle elevazioni: | Inerzia delle pareti [kNm] | Inerzia dei solai [kNm] | Inerzia di archi o volte [kNm] | Spinta statica di archi o volte [kNm] | Spinta statica della copertura [kNm] |
| 1 | 90.4 | 243.1 | 0.0 | 0.0 | 0.0 |
| - | 0.0 | 0.0 | 0.0 | 0.0 | 0.0 |
| - | 0.0 | 0.0 | 0.0 | 0.0 | 0.0 |
| - | 0.0 | 0.0 | 0.0 | 0.0 | 0.0 |

| MOLTIPLI-CATORE $\alpha_0$ | Ribaltamento delle elevazioni: | Valore di $\alpha_0$ | Fattore di Confidenza FC | Massa partecipante M* | Frazione massa partecipante e* | Accelerazione spettrale $a_0$* [m/sec$^2$] |
|---|---|---|---|---|---|---|
| | 1 | **0.054** | 1.35 | 9.005 | 0.891 | 0.442 |
| | - | **N.C.** | | 0.000 | 0.000 | N.C. |
| | - | **N.C.** | | 0.000 | 0.000 | N.C. |
| | - | **N.C.** | | 0.000 | 0.000 | N.C. |

**CALCOLO DELLE PGA PER LA VERIFICA DELLO STATO LIMITE DI SALVAGUARDIA DELLA VITA**
**CIRCOLARE N. 617 DEL 02-02-2009 - ISTRUZIONI PER L'APPLICAZIONE DELLE NTC 14-01-2008CALCOLO DELLE PGA PER LA VERIFICA DELLO STATO LIMITE DI SALVAGUARDIA DELLA VITA**

| PARAMETRI DI CALCOLO | | |
|---|---|---|
| | Fattore di struttura q | 2.00 |
| | Coefficiente di amplificazione topografica $S_T$ | 1.00 |
| | Categoria suolo di fondazione | C |
| | PGA di riferimento $a_g(P_{VR})$ [g] | **0.184** |
| | Fattore di amplificazione massima dello spettro $F_O$ | 2.470 |
| | Periodo di inizio del tratto a velocità costante dello spettro $T_C$* [sec] | 0.273 |
| | Fattore di smorzamento $\eta$ | 1.000 |
| | Altezza della struttura H [m] | 4.35 |
| | Tempo di ritorno allo SLV [anni] | 712 |
| | Coefficiente di amplificazione stratigrafica $S_S$ | 1.427 |
| | Coefficiente $C_{CCoefficiente}$ | 1.612 |
| | Fattore di amplificazione locale del suolo di fondazione S | 1.427 |
| | Numero di piani dell'edificio N | 1 |
| | Coefficiente di partecipazione modale $\gamma$ | 1.000 |
| | Primo periodo di vibrazione dell'intera struttura $T_1$ [sec] | 0.151 |

| Ribaltamento delle elevazioni: | Baricentro delle linee di vincolo Z [m] | $\psi(Z) = Z/H$ | $a_{g(SLV)}$ (C8A.4.9) | $S_e(T_1)$ (C8A.4.10) | |
|---|---|---|---|---|---|
| 1 | | | 0.063 | | |
| - | - | - | - | - | |
| - | - | - | - | - | |
| - | - | - | - | - | |

| PGA-SLV | Ribaltamento delle elevazioni: | $a_{g(SLV)}$ min(C8DA.4.9; C8A.4.10) | $\alpha_{u,\ PGA}$ | TR_PGA$_{SL}$ [anni] | $\alpha_{u,\ TR}$ 1) $(TR_{SLV}/TR_{SLV,RIF})^{1/2.43}$ | $\alpha_{u,\ TR}$ 2) $(TR_{SLV}/TR_{SLV,RIF})$ |
|---|---|---|---|---|---|---|
| | 1 | **0.063** | **0.342** | **62** | **0.366** | **0.087** |
| | - | - | - | - | - | - |
| | - | - | - | - | - | - |
| | - | - | - | - | - | - |

### 1.2.2 Corpo B

**DATI INIZIALI**

| Elevazione | GEOMETRIA DELLA FACCIATA (*) – Altezza delle fasce murarie: Quota del sottofinestra [m] | Altezza delle fasce murarie: Quota del soprafinestra [m] | Larghezza delle fasce murarie: Larghezza della fascia sottofinestra al netto delle aperture [m] | Larghezza della fascia intermedia al netto delle aperture [m] | Larghezza della fascia soprafinestra al netto delle aperture [m] | Peso specifico della muratura $\gamma_i$ [kN/m$^3$] | Arretramento della cerniera attorno alla quale avviene il ribaltamento rispetto al lembo esterno della parete [m] |
|---|---|---|---|---|---|---|---|
| 1 | 3.35 | | 1.80 | | | 12.0 | 0.05 |
| 2 | | | | | | | |
| 3 | | | | | | | |
| 4 | | | | | | | |

**CARATTERIZZAZIONE GEOMETRICA DEI MACROELEMENTI**

| Elevazione | Spessore della parete al piano i-esimo $s_i$ [m] | Altezza di interpiano al piano i-esimo $h_i$ [m] | Braccio orizzontale del carico del solaio al piano i-esimo rispetto alla cerniera cilindrica $d_i$ [m] | Braccio orizzontale dell'azione di archi o volte al piano i-esimo rispetto alla cerniera cilindrica $d_{Vi}$ [m] | Quota del punto di applicazione di azioni trasmesse da archi o volte al piano i-esimo $h_{Vi}$ [m] | Quota del baricentro della parete al piano i-esimo $y_{Gi}$ [m] | Quota del baricentro della parete al piano i-esimo (**) $y_{Gi}$ [m] |
|---|---|---|---|---|---|---|---|
| 1 | 0.36 | 3.35 | 0.31 | | | 1.68 | |
| 2 | | | | | | 0.00 | |
| 3 | | | | | | | |
| 4 | | | | | | 0.00 | |

**AZIONI SUI MACROELEMENTI**

| Elevazione | Peso proprio della parete al piano i-esimo $W_i$ [kN] | Peso proprio della parete al piano i-esimo (**) $W_i$ [kN] | Carico trasmesso dal solaio al piano i-esimo $P_{Si}$ [kN] | Spinta statica della copertura $P_H$ [kN] | Componente verticale della spinta di archi o volte al piano i-esimo $F_{Vi}$ [kN] | Componente orizzontale della spinta di archi o volte al piano i-esimo $F_{Hi}$ [kN] | Azione del tirante al piano i-esimo $T_i$ [kN] |
|---|---|---|---|---|---|---|---|
| 1 | 26.0 | | 39.3 | | | | |
| 2 | 0.0 | | 0.0 | | | | |
| 3 | 0.0 | | | | | | |
| 4 | 0.0 | | | | | | |

**DATI DI CALCOLO**

**MOMENTO DELLE AZIONI STABILIZZANTI**

| Ribaltamento delle elevazioni: | Peso proprio delle pareti [kNm] | Carico dei solai [kNm] | Azione di archi o volte [kNm] | Azione dei tiranti [kNm] |
|---|---|---|---|---|
| 1 | 3.4 | 10.2 | 0.0 | 0.0 |
| - | 0.0 | 0.0 | 0.0 | 0.0 |
| - | 0.0 | 0.0 | 0.0 | 0.0 |
| - | 0.0 | 0.0 | 0.0 | 0.0 |

**MOMENTO DELLE AZIONI RIBALTANTI**

| Ribaltamento delle elevazioni: | Inerzia delle pareti [kNm] | Inerzia dei solai [kNm] | Inerzia di archi o volte [kNm] | Spinta statica di archi o volte [kNm] | Spinta statica della copertura [kNm] |
|---|---|---|---|---|---|
| 1 | 43.6 | 263.0 | 0.0 | 0.0 | 0.0 |
| - | 0.0 | 0.0 | 0.0 | 0.0 | 0.0 |
| - | 0.0 | 0.0 | 0.0 | 0.0 | 0.0 |
| - | 0.0 | 0.0 | 0.0 | 0.0 | 0.0 |

| MOLTIPLICATORE $\alpha_0$ | Ribaltamento delle elevazioni: | Valore di $\alpha_0$ | Fattore di Confidenza FC | Massa partecipante M* | Frazione massa partecipante e* | Accelerazione spettrale $a_0$* [m/sec$^2$] |
|---|---|---|---|---|---|---|
| | 1 | **0.044** | 1.35 | 6.088 | 0.914 | 0.352 |
| | - | **N.C.** | | 0.000 | 0.000 | N.C. |
| | - | **N.C.** | | 0.000 | 0.000 | N.C. |
| | - | **N.C.** | | 0.000 | 0.000 | N.C. |

**CALCOLO DELLE PGA PER LA VERIFICA DELLO STATO LIMITE DI SALVAGUARDIA DELLA VITA**
**CIRCOLARE N. 617 DEL 02-02-2009 - ISTRUZIONI PER L'APPLICAZIONE DELLE NTC 14-01-2008CALCOLO DELLE PGA PER LA VERIFICA DELLO STATO LIMITE DI SALVAGUARDIA DELLA VITA**

| PARAMETRI DI CALCOLO | |
|---|---|
| Fattore di struttura q | 2.00 |
| Coefficiente di amplificazione topografica $S_T$ | 1.00 |
| Categoria suolo di fondazione | C |
| PGA di riferimento $a_g(P_{VR})$ [g] | **0.184** |
| Fattore di amplificazione massima dello spettro $F_O$ | 2.470 |
| Periodo di inizio del tratto a velocità costante dello spettro $T_C$* [sec] | 0.273 |
| Fattore di smorzamento $\eta$ | 1.000 |
| Altezza della struttura H [m] | 4.35 |
| Tempo di ritorno allo SLV [anni] | 712 |
| Coefficiente di amplificazione stratigrafica $S_S$ | 1.427 |
| Coefficiente $C_{CCoefficiente}$ | 1.612 |
| Fattore di amplificazione locale del suolo di fondazione S | 1.427 |
| Numero di piani dell'edificio N | 1 |
| Coefficiente di partecipazione modale $\gamma$ | 1.000 |
| Primo periodo di vibrazione dell'intera struttura $T_1$ [sec] | 0.151 |

| Ribaltamento delle elevazioni: | Baricentro delle linee di vincolo Z [m] | $\psi(Z) = Z/H$ | $a_{g(SLV)}$ (C8A.4.9) | $S_e(T_1)$ (C8A.4.10) | |
|---|---|---|---|---|---|
| 1 | | | 0.050 | | |
| - | - | - | - | - | |
| - | - | - | - | - | |
| - | - | - | - | - | |

| PGA-SLV | Ribaltamento delle elevazioni: | $a_{g(SLV)}$ min(C8DA.4.9; C8A.4.10) | $\alpha_{u,\ PGA}$ | TR_PGA$_{SL}$ [anni] | $\alpha_{u,\ TR}$ 1) $(TR_{SLV}/TR_{SLV,RIF})^{1/2.43}$ | $\alpha_{u,\ TR}$ 2) $(TR_{SLV}/TR_{SLV,RIF})$ |
|---|---|---|---|---|---|---|
| | 1 | **0.050** | **0.272** | **42** | **0.312** | **0.059** |
| | - | - | - | - | - | - |
| | - | - | - | - | - | - |
| | - | - | - | - | - | - |

## 1.3. Verifica di vulnerabilità sismica – push over

### *1.3.1 Corpo A*

```
;---------------------------------------------------------------------------
;  midas Gen Text(MGT) File.
;  Date : 2020/6/15
;---------------------------------------------------------------------------

*VERSION
   8.8.1

*UNIT    ; Unit System
; FORCE, LENGTH, HEAT, TEMPER
   KN   , M, BTU, F

*PROJINFO    ; Project Information
; PROJECT, REVISION, USER, EMAIL, ADDRESS, TEL, FAX, CLIENT, TITLE, ENGINEER, EDATE
    ; One Line per Data
; CHECK1, CDATE1, CHECK2, CDATE2, CHECK3, CDATE3, APPROVE, ADATE, COMMENT
    ; One Line per Data
   USER=Nicola
   ADDRESS=DiMoRe

*STRUCTYPE    ; Structure Type
; iSTYP, iMASS, iSMAS, bMASSOFFSET, bSELFWEIGHT, GRAV, TEMPER, bALIGNBEAM, bALIGNSLAB,
 bROTRIGID
     0, 1, 1, NO, YES, 9.806, 0, NO, NO, YES

*REBAR-MATL-CODE    ; Rebar Material Code
; CONC_CODE, CONC_MDB, SRC_CODE, SRC_MDB
 NTC08(RC), B450C, ASTM(RC), Grade 60

*NODE    ; Nodes
; iNO, X, Y, Z
     1, 1.39999537783176, 28.3112377199097, -1
    15, 16.9499953778329, 28.3112377199095, -1
    18, 16.9499953778329, 22.9499995830372, -1
    24, 1.39999537783176, 22.9499995830378, -1
    65, 23.3999953778318, 28.3112377199097, -1
    66, 23.3999953778318, 19.6001517720915, -1
    67, 16.9499953778329, 19.5922327847465, -1
    69, 29.7499953778321, 26.0112377199091, -1
    73, 29.7499953778321, 19.5999995830378, -1
    75, 16.9499953778329, 16.324109464305, -1
    78, 23.3986127198418, 16.3239572752514, -1
    80, 29.7499953778321, 16.3260418908237, -1
    81, 29.7499953778321, 9.89999958303782, -1
    85, 23.4000223495501, 9.89999958303782, -1
    86, 16.9499953778329, 9.89999958303782, -1
   102, 23.3999953778318, 26.0112377199091, -1
   115, 28.9374953778322, 9.89999958303782, -1
   118, 23.4000223495501, 9.89999958303782, 3.35
   119, 28.9374953778322, 9.89999958303782, 3.35
   120, 17.3124953778321, 16.3245545236711, -1
   121, 21.1618040488368, 16.3239572752514, -1
   122, 27.3374953778319, 16.3239572808237, -1
   123, 17.3124953778321, 16.3245545236711, 3.35
   124, 21.1618040488368, 16.3239572752514, 3.35
   125, 27.3374953778319, 16.3239572808237, 3.35
   132, 13.2999953778315, 22.9499995830378, -1
   134, 3.23749537783205, 22.9499995830378, -1
   135, 20.1749953778323, 19.596192278419, -1
   136, 3.23749537783205, 22.9499995830378, 3.35
   138, 13.2999953778315, 22.9499995830378, 3.35
   139, 16.4749953778315, 22.9499995830372, -1
```

```
140, 16.4749953778315, 22.9499995830372, 3.35
141, 20.1749953778323, 19.596192278419, 3.35
142, 27.3374953778319, 19.5999995830378, -1
143, 27.3374953778319, 19.5999995830378, 3.35
144, 1.82249537783118, 28.3112377199097, -1
145, 6.14999537783177, 28.3112377199097, -1
146, 9.79499537783235, 28.3112377199094, -1
147, 11.7499953778323, 28.3112377199091, -1
148, 13.2999953778315, 28.3112377199097, -1
149, 14.8499953778306, 28.3112377199091, -1
150, 22.6274953778321, 28.3112377199097, -1
151, 26.5749953778319, 26.0112377199091, -1
153, 18.0699953778335, 28.3112377199091, -1
154, 1.82249537783118, 28.3112377199097, 3.35
155, 6.14999537783177, 28.3112377199097, 3.35
156, 9.79499537783235, 28.3112377199094, 3.35
157, 11.7499953778323, 28.3112377199091, 3.35
158, 13.2999953778315, 28.3112377199097, 3.35
159, 14.8499953778306, 28.3112377199091, 3.35
160, 16.9499953778329, 28.3112377199095, 3.35
161, 18.0699953778335, 28.3112377199091, 3.35
162, 22.6274953778321, 28.3112377199097, 3.35
163, 26.5749953778319, 26.0112377199091, 3.35
164, 1.39999537783176, 25.6306186514737, -1
169, 29.7499953778321, 25.1181186514729, -1
170, 29.7499953778321, 20.2874995830372, -1
171, 29.7499953778321, 13.1130207369307, -1
172, 23.3993175346959, 13.1119784291446, -1
173, 16.9499953778329, 13.1120545236714, -1
175, 16.9499953778329, 25.9662377199095, -1
177, 23.3999953778318, 21.6551517720915, -1
189, 16.9499953778329, 13.1120545236714, 3.35
190, 23.3993175346959, 13.1119784291446, 3.35
191, 29.7499953778321, 13.1130207369307, 3.35
193, 16.9499953778329, 20.0086161838916, -1
194, 16.9499953778329, 20.0086161838916, 3.35
195, 23.3999953778318, 21.6551517720915, 3.35
196, 23.3999953778318, 26.0112377199091, 3.35
197, 29.7499953778321, 20.2874995830372, 3.35
198, 1.39999537783176, 25.6306186514737, 3.35
199, 16.9499953778329, 25.9662377199095, 3.35
200, 16.9499953778329, 22.9499995830372, 3.35
201, 29.7499953778321, 25.1181186514729, 3.35
206, 1.39999537783176, 22.9499995830378, 3.35
207, 1.39999537783176, 28.3112377199097, 3.35
208, 16.9499953778329, 9.89999958303782, 3.35
209, 16.9499953778329, 16.324109464305, 3.35
210, 16.9499953778329, 19.5922327847465, 3.35
211, 23.3986127198418, 16.3239572752514, 3.35
212, 29.7499953778321, 16.3260418908237, 3.35
213, 29.7499953778321, 9.89999958303782, 3.35
214, 29.7499953778321, 26.0112377199091, 3.35
215, 29.7499953778321, 19.5999995830378, 3.35
216, 23.3999953778318, 28.3112377199097, 3.35
217, 23.3999953778318, 19.6001517720915, 3.35
241, 16.9499953778329, 12.701041890823, 3.35
242, 16.9499953778329, 11.3277707369302, 3.35
252, 3.69999537783206, 22.9499995830378, 3.35
376, 9.93499537783235, 22.9499995830378, -1
377, 9.93499537783235, 22.9499995830378, 3.35
379, 8.04499537783235, 22.9499995830378, -1
380, 8.04499537783293, 22.9499995830378, 3.35
```

```
396, 7.12499537783352, 22.9499995830378, -1
397, 7.12499537783352, 22.9499995830378, 3.35
460, 18.2799953778329, 9.89999958303782, 3.35
461, 18.2799953778321, 9.89999958303782, -1
462, 23.3999953778318, 27.1612377199094, 3.35
463, 23.3999953778318, 27.1612377199094, -1
464, 23.3999953778318, 24.8012377199091, -1
465, 23.3999953778318, 24.8012377199091, 3.35
477, 3.23749537783205, 22.9499995830378, 1.9
478, 13.2999953778315, 22.9499995830378, 1.9
479, 16.4749953778315, 22.9499995830372, 1.9
480, 9.93499537783235, 22.9499995830378, 1.9
481, 8.04499537783293, 22.9499995830378, 1.9
482, 7.12499537783352, 22.9499995830378, 1.9
483, 3.23749537783205, 22.9499995830378, 2.625
484, 13.2999953778315, 22.9499995830378, 2.625
485, 16.4749953778315, 22.9499995830372, 2.625
486, 9.93499537783235, 22.9499995830378, 2.625
487, 8.04499537783293, 22.9499995830378, 2.625
488, 7.12499537783352, 22.9499995830378, 2.625
489, 5.07749537783205, 22.9499995830378, 2.625
490, 6.32499537783352, 22.9499995830378, 2.625
491, 8.16999537783293, 22.9499995830378, 2.625
492, 9.29499537783235, 22.9499995830378, 2.625
493, 10.5749953778323, 22.9499995830378, 2.625
494, 15.1849953778315, 22.9499995830378, 2.625
495, 11.4149953778315, 22.9499995830378, 2.625
496, 15.9999953778315, 22.9499995830372, 2.625
553, 17.3124953778321, 16.3245545236711, 2.4
554, 21.1618040488368, 16.3239572752514, 2.4
555, 27.3374953778319, 19.5999995830378, 2.4
556, 23.3999953778318, 19.6001517720915, 2.4
557, 17.3124953778321, 16.3245545236711, 2.875
558, 21.1618040488368, 16.3239572752514, 2.875
559, 27.3374953778319, 19.5999995830378, 2.875
560, 23.3999953778318, 19.6001517720915, 2.875
561, 23.5249953778318, 19.6001517720915, 2.875
562, 24.9224953778319, 19.5999995830378, 2.875
563, 18.9268040488368, 16.3239572752514, 2.875
564, 17.6874953778321, 16.3245545236711, 2.875
565, 23.3986130488368, 16.3239572752514, 2.4
566, 23.3986130488368, 16.3239572752514, 2.875
567, 27.3374950488368, 16.3239572812514, 2.4
568, 27.3374950488368, 16.3239572812514, 2.875
569, 23.5236130488368, 16.3239572752514, 2.875
570, 24.9224950488368, 16.3239572812514, 2.875
571, 23.4000223495501, 9.89999958303782, 2.9
572, 28.9374953778322, 9.89999958303782, 2.9
573, 1.82249537783118, 28.3112377199097, 2.9
574, 6.14999537783177, 28.3112377199097, 2.9
575, 9.79499537783235, 28.3112377199094, 2.9
576, 11.7499953778323, 28.3112377199091, 2.9
577, 13.2999953778315, 28.3112377199097, 2.9
578, 14.8499953778306, 28.3112377199091, 2.9
579, 16.9499953778329, 28.3112377199095, 2.9
580, 18.0699953778335, 28.3112377199091, 2.9
581, 22.6274953778321, 28.3112377199097, 2.9
582, 29.7499953778321, 20.2874995830372, 2.9
583, 29.7499953778321, 25.1181186514729, 2.9
584, 18.2799953778329, 9.89999958303782, 2.9
585, 23.4000223495501, 9.89999958303782, 3.125
586, 28.9374953778322, 9.89999958303782, 3.125
```

```
   587, 1.82249537783118, 28.3112377199097, 3.125
   588, 6.14999537783177, 28.3112377199097, 3.125
   589, 9.79499537783235, 28.3112377199094, 3.125
   590, 11.7499953778323, 28.3112377199091, 3.125
   591, 13.2999953778315, 28.3112377199097, 3.125
   592, 14.8499953778306, 28.3112377199091, 3.125
   593, 16.9499953778329, 28.3112377199095, 3.125
   594, 18.0699953778335, 28.3112377199091, 3.125
   595, 22.6274953778321, 28.3112377199097, 3.125
   596, 29.7499953778321, 20.2874995830372, 3.125
   597, 29.7499953778321, 25.1181186514729, 3.125
   598, 18.2799953778329, 9.89999958303782, 3.125
   599, 2.30749537783118, 28.3112377199097, 3.125
   600, 5.55499537783177, 28.3112377199097, 3.125
   601, 6.74499537783177, 28.3112377199097, 3.125
   602, 10.2949953778323, 28.3112377199094, 3.125
   603, 9.29499537783235, 28.3112377199094, 3.125
   604, 11.6049953778323, 28.3112377199091, 3.125
   605, 11.8949953778323, 28.3112377199091, 3.125
   606, 14.9949953778306, 28.3112377199091, 3.125
   607, 14.7049953778306, 28.3112377199091, 3.125
   608, 13.3949953778315, 28.3112377199097, 3.125
   609, 13.2049953778315, 28.3112377199097, 3.125
   610, 21.8524953778321, 28.3112377199097, 3.125
   611, 18.5449953778335, 28.3112377199091, 3.125
   612, 28.1224953778322, 9.89999958303782, 3.125
   613, 21.9250223495501, 9.89999958303782, 3.125
   614, 24.8750223495501, 9.89999958303782, 3.125
   615, 18.6999953778329, 9.89999958303782, 3.125
   616, 29.7499953778321, 24.2231186514729, 3.125
   617, 29.7499953778321, 20.9724995830372, 3.125

*ELEMENT    ; Elements
; iEL, TYPE, iMAT, iPRO, iN1, iN2, ANGLE, iSUB,                      ; Frame  Element
; iEL, TYPE, iMAT, iPRO, iN1, iN2, ANGLE, iSUB, EXVAL, EXVAL2, bLMT ; Comp/Tens Truss
; iEL, TYPE, iMAT, iPRO, iN1, iN2, iN3, iN4, iSUB, iWID , LCAXIS    ; Planar Element
; iEL, TYPE, iMAT, iPRO, iN1, iN2, iN3, iN4, iN5, iN6, iN7, iN8     ; Solid  Element
     9, BEAM  ,    1,   119,   164,   198,    90,     0
    10, BEAM  ,    1,    28,   144,   573,     0,     0
    12, BEAM  ,    3,    22,   134,   477,     0,     0
    18, BEAM  ,    1,    29,   145,   574,     0,     0
    24, BEAM  ,    3,    23,   396,   482,     0,     0
    26, BEAM  ,    1,    30,   146,   575,     0,     0
    27, BEAM  ,    3,    38,   376,   480,     0,     0
    30, BEAM  ,    1,    31,   147,   576,     0,     0
    33, BEAM  ,    3,    24,   132,   478,     0,     0
    34, BEAM  ,    1,    32,   148,   577,     0,     0
    39, BEAM  ,    1,    33,   149,   578,     0,     0
    40, BEAM  ,    1,    25,   139,   479,     0,     0
    41, BEAM  ,    1,   111,   173,   189,    90,     0
    42, BEAM  ,    1,   115,   193,   194,    90,     0
    43, BEAM  ,    1,   121,    18,   200,    90,     0
    44, BEAM  ,    1,   120,   175,   199,    90,     0
    45, BEAM  ,    1,    34,    15,   579,     0,     0
    46, BEAM  ,    1,    14,   120,   553,     0,     0
    47, BEAM  ,    1,    11,   461,   584,     0,     0
    48, BEAM  ,    1,    35,   153,   580,     0,     0
    49, BEAM  ,    3,    26,   135,   141,     0,     0
    50, BEAM  ,    1,    15,   121,   554,     0,     0
    51, BEAM  ,    1,    36,   150,   581,     0,     0
    52, BEAM  ,    1,    12,    85,   571,     0,     0
    53, BEAM  ,    3,   112,   172,   190,    90,     0
```

```
   54, BEAM  ,    1,   117,   177,   195,    90,     0
   55, BEAM  ,    1,   700,   102,   196,    90,     0
   56, BEAM  ,    1,    37,   151,   163,     0,     0
   57, BEAM  ,    1,    16,   122,   567,     0,     0
   58, BEAM  ,    1,    27,   142,   555,     0,     0
   59, BEAM  ,    1,    13,   115,   572,     0,     0
   60, BEAM  ,    1,   113,   171,   191,    90,     0
   61, BEAM  ,    1,   118,   170,   582,    90,     0
   62, BEAM  ,    1,   122,   169,   583,    90,     0
 2001, BEAM  ,    3,   700,    78,   565,     0,     0
 2002, BEAM  ,    1,   700,    66,   556,     0,     0
 2003, BEAM  ,    3,   700,   379,   481,     0,     0
 2006, BEAM  ,    1,   700,    80,   212,     0,     0
 2007, BEAM  ,    1,   700,    73,   215,     0,     0
 2009, BEAM  ,    1,   700,    86,   208,     0,     0
 2010, BEAM  ,    1,   700,    81,   213,     0,     0
 2013, BEAM  ,    1,   700,    75,   209,     0,     0
 2014, BEAM  ,    3,   700,    67,   210,     0,     0
 2015, BEAM  ,    1,   700,    24,   206,     0,     0
 2016, BEAM  ,    1,   700,    69,   214,     0,     0
 2017, BEAM  ,    1,   700,     1,   207,     0,     0
 2018, BEAM  ,    1,   700,    65,   216,     0,     0
 6025, BEAM  ,    6,   701,   208,   460,     0,     0
 6027, BEAM  ,    6,   701,   118,   119,     0,     0
 6028, BEAM  ,    6,   701,   119,   213,     0,     0
 6032, BEAM  ,    6,   702,   208,   242,     0,     0
 6033, BEAM  ,    6,   702,   118,   190,     0,     0
 6034, BEAM  ,    6,   701,   213,   191,     0,     0
 6036, BEAM  ,    6,   702,   242,   241,     0,     0
 6045, BEAM  ,    6,   702,   241,   189,     0,     0
 6047, BEAM  ,    6,   702,   189,   209,     0,     0
 6048, BEAM  ,    6,   702,   190,   211,     0,     0
 6049, BEAM  ,    6,   701,   191,   212,     0,     0
 6050, BEAM  ,    6,   702,   209,   123,     0,     0
 6051, BEAM  ,    6,   702,   123,   124,     0,     0
 6052, BEAM  ,    6,   702,   124,   211,     0,     0
 6053, BEAM  ,    6,   702,   211,   125,     0,     0
 6054, BEAM  ,    6,   702,   125,   212,     0,     0
 6055, BEAM  ,    6,   702,   209,   210,     0,     0
 6056, BEAM  ,    6,   701,   212,   215,     0,     0
 6058, BEAM  ,    6,   702,   210,   141,     0,     0
 6059, BEAM  ,    6,   702,   141,   217,     0,     0
 6060, BEAM  ,    6,   702,   217,   143,     0,     0
 6061, BEAM  ,    6,   702,   143,   215,     0,     0
 6062, BEAM  ,    6,   702,   210,   194,     0,     0
 6063, BEAM  ,    6,   701,   215,   197,     0,     0
 6066, BEAM  ,    6,   702,   217,   195,     0,     0
 6067, BEAM  ,    6,   702,   194,   200,     0,     0
 6070, BEAM  ,    6,   701,   197,   201,     0,     0
 6071, BEAM  ,    6,   702,   206,   136,     0,     0
 6072, BEAM  ,    6,   702,   136,   252,     0,     0
 6073, BEAM  ,    6,   702,   252,   397,     0,     0
 6074, BEAM  ,    6,   702,   397,   380,     0,     0
 6075, BEAM  ,    6,   702,   380,   377,     0,     0
 6076, BEAM  ,    6,   702,   377,   138,     0,     0
 6077, BEAM  ,    6,   702,   138,   140,     0,     0
 6078, BEAM  ,    6,   702,   140,   200,     0,     0
 6079, BEAM  ,    6,   702,   195,   465,     0,     0
 6080, BEAM  ,    6,   701,   206,   198,     0,     0
 6081, BEAM  ,    6,   702,   200,   199,     0,     0
 6082, BEAM  ,    6,   701,   201,   214,     0,     0
 6083, BEAM  ,    6,   701,   196,   163,     0,     0
```

```
6084, BEAM  ,    6,   701,   163,   214,     0,     0
6085, BEAM  ,    6,   701,   198,   207,     0,     0
6086, BEAM  ,    6,   702,   199,   160,     0,     0
6087, BEAM  ,    6,   701,   196,   462,     0,     0
6088, BEAM  ,    6,   701,   207,   154,     0,     0
6089, BEAM  ,    6,   701,   154,   155,     0,     0
6090, BEAM  ,    6,   701,   155,   156,     0,     0
6091, BEAM  ,    6,   701,   156,   157,     0,     0
6092, BEAM  ,    6,   701,   157,   158,     0,     0
6093, BEAM  ,    6,   701,   158,   159,     0,     0
6094, BEAM  ,    6,   701,   159,   160,     0,     0
6095, BEAM  ,    6,   701,   160,   161,     0,     0
6096, BEAM  ,    6,   701,   161,   162,     0,     0
6097, BEAM  ,    6,   701,   162,   216,     0,     0
6109, BEAM  ,    6,   701,   460,   118,     0,     0
6110, BEAM  ,    6,   701,   462,   216,     0,     0
6111, BEAM  ,    1,   116,   463,   462,    90,     0
6112, BEAM  ,    6,   702,   465,   196,     0,     0
6113, BEAM  ,    1,   102,   464,   465,    90,     0
6127, BEAM  ,    4,    22,   477,   483,     0,     0
6128, BEAM  ,    4,    24,   478,   484,     0,     0
6129, BEAM  ,    2,    25,   479,   485,     0,     0
6130, BEAM  ,    4,    38,   480,   486,     0,     0
6131, BEAM  ,    4,   700,   481,   487,     0,     0
6132, BEAM  ,    4,    23,   482,   488,     0,     0
6133, BEAM  ,    4,    22,   483,   136,     0,     0
6134, BEAM  ,    4,    24,   484,   138,     0,     0
6135, BEAM  ,    2,    25,   485,   140,     0,     0
6136, BEAM  ,    4,    38,   486,   377,     0,     0
6137, BEAM  ,    4,   700,   487,   380,     0,     0
6138, BEAM  ,    4,    23,   488,   397,     0,     0
6139, BEAM  ,    4,   710,   483,   489,     0,     0
6140, BEAM  ,    4,   710,   487,   491,     0,     0
6141, BEAM  ,    4,   710,   486,   493,     0,     0
6142, BEAM  ,    4,   710,   484,   494,     0,     0
6143, BEAM  ,    3,   710,   489,   490,     0,     0
6144, BEAM  ,    4,   710,   490,   488,     0,     0
6145, BEAM  ,    3,   710,   491,   492,     0,     0
6146, BEAM  ,    4,   710,   492,   486,     0,     0
6147, BEAM  ,    3,   710,   493,   495,     0,     0
6148, BEAM  ,    3,   710,   494,   496,     0,     0
6149, BEAM  ,    4,   710,   495,   484,     0,     0
6150, BEAM  ,    4,   710,   496,   485,     0,     0
6217, BEAM  ,    2,    14,   553,   557,     0,     0
6218, BEAM  ,    2,    15,   554,   558,     0,     0
6219, BEAM  ,    2,    27,   555,   559,     0,     0
6220, BEAM  ,    2,   700,   556,   560,     0,     0
6221, BEAM  ,    2,    14,   557,   123,     0,     0
6222, BEAM  ,    2,    15,   558,   124,     0,     0
6223, BEAM  ,    2,    27,   559,   143,     0,     0
6224, BEAM  ,    2,   700,   560,   217,     0,     0
6225, BEAM  ,    2,   711,   557,   564,     0,     0
6226, BEAM  ,    2,   711,   560,   561,     0,     0
6227, BEAM  ,    1,   711,   561,   562,     0,     0
6228, BEAM  ,    2,   711,   562,   559,     0,     0
6229, BEAM  ,    2,   711,   563,   558,     0,     0
6230, BEAM  ,    1,   711,   564,   563,     0,     0
6231, BEAM  ,    4,   700,   565,   566,     0,     0
6232, BEAM  ,    4,   700,   566,   211,     0,     0
6233, BEAM  ,    2,    16,   567,   568,     0,     0
6234, BEAM  ,    2,    16,   568,   125,     0,     0
6235, BEAM  ,    4,   711,   566,   569,     0,     0
```

```
  6236, BEAM  ,    1,   711,   569,   570,     0,     0
  6237, BEAM  ,    2,   711,   570,   568,     0,     0
  6238, BEAM  ,    2,    12,   571,   585,     0,     0
  6239, BEAM  ,    2,    13,   572,   586,     0,     0
  6240, BEAM  ,    2,    28,   573,   587,     0,     0
  6241, BEAM  ,    2,    29,   574,   588,     0,     0
  6242, BEAM  ,    2,    30,   575,   589,     0,     0
  6243, BEAM  ,    2,    31,   576,   590,     0,     0
  6244, BEAM  ,    2,    32,   577,   591,     0,     0
  6245, BEAM  ,    2,    33,   578,   592,     0,     0
  6246, BEAM  ,    2,    34,   579,   593,     0,     0
  6247, BEAM  ,    2,    35,   580,   594,     0,     0
  6248, BEAM  ,    2,    36,   581,   595,     0,     0
  6249, BEAM  ,    2,   118,   582,   596,    90,     0
  6250, BEAM  ,    2,   122,   583,   597,    90,     0
  6251, BEAM  ,    2,    11,   584,   598,     0,     0
  6252, BEAM  ,    2,    12,   585,   118,     0,     0
  6253, BEAM  ,    2,    13,   586,   119,     0,     0
  6254, BEAM  ,    2,    28,   587,   154,     0,     0
  6255, BEAM  ,    2,    29,   588,   155,     0,     0
  6256, BEAM  ,    2,    30,   589,   156,     0,     0
  6257, BEAM  ,    2,    31,   590,   157,     0,     0
  6258, BEAM  ,    2,    32,   591,   158,     0,     0
  6259, BEAM  ,    2,    33,   592,   159,     0,     0
  6260, BEAM  ,    2,    34,   593,   160,     0,     0
  6261, BEAM  ,    2,    35,   594,   161,     0,     0
  6262, BEAM  ,    2,    36,   595,   162,     0,     0
  6263, BEAM  ,    2,   118,   596,   197,    90,     0
  6264, BEAM  ,    2,   122,   597,   201,    90,     0
  6265, BEAM  ,    2,    11,   598,   460,     0,     0
  6266, BEAM  ,    2,   712,   598,   615,     0,     0
  6267, BEAM  ,    2,   712,   585,   614,     0,     0
  6268, BEAM  ,    2,   712,   596,   617,     0,     0
  6269, BEAM  ,    2,   712,   587,   599,     0,     0
  6270, BEAM  ,    2,   712,   588,   601,     0,     0
  6271, BEAM  ,    2,   712,   589,   602,     0,     0
  6272, BEAM  ,    2,   712,   590,   605,     0,     0
  6273, BEAM  ,    2,   712,   591,   608,     0,     0
  6274, BEAM  ,    2,   712,   592,   606,     0,     0
  6275, BEAM  ,    2,   712,   594,   611,     0,     0
  6276, BEAM  ,    1,   712,   599,   600,     0,     0
  6277, BEAM  ,    2,   712,   600,   588,     0,     0
  6278, BEAM  ,    1,   712,   601,   603,     0,     0
  6279, BEAM  ,    1,   712,   602,   604,     0,     0
  6280, BEAM  ,    2,   712,   603,   589,     0,     0
  6281, BEAM  ,    2,   712,   604,   590,     0,     0
  6282, BEAM  ,    1,   712,   605,   609,     0,     0
  6283, BEAM  ,    1,   712,   606,   593,     0,     0
  6284, BEAM  ,    2,   712,   607,   592,     0,     0
  6285, BEAM  ,    1,   712,   608,   607,     0,     0
  6286, BEAM  ,    2,   712,   609,   591,     0,     0
  6287, BEAM  ,    2,   712,   610,   595,     0,     0
  6288, BEAM  ,    1,   712,   611,   610,     0,     0
  6289, BEAM  ,    2,   712,   612,   586,     0,     0
  6290, BEAM  ,    2,   712,   613,   585,     0,     0
  6291, BEAM  ,    1,   712,   614,   612,     0,     0
  6292, BEAM  ,    1,   712,   615,   613,     0,     0
  6293, BEAM  ,    2,   712,   616,   597,     0,     0
  6294, BEAM  ,    1,   712,   617,   616,     0,     0
  6295, BEAM  ,    3,   704,   488,   487,     0,     0

*GROUP    ; Group
```

```
; NAME, NODE_LIST, ELEM_LIST, PLANE_TYPE
   Midas     , , , 0
   SPUTTANATI, , , 0
   P2-P3 CA  , , , 0
   Linee sezione (D), , , 0

*BNDR-GROUP    ; Boundary Group
; NAME, AUTOTYPE
 fasce, 0
 pilastrini, 0

*MATERIAL    ; Material
; iMAT, TYPE, MNAME, SPHEAT, HEATCO, PLAST, TUNIT, bMASS, DAMPRATIO, [DATA1]
 ; STEEL, CONC, ALUMINUM, USER
; iMAT, TYPE, MNAME, SPHEAT, HEATCO, PLAST, TUNIT, bMASS, DAMPRATIO, [DATA2], [DATA2]
 ; SRC
; [DATA1] : 1, STANDARD, CODE/PRODUCT, DB, USEELAST, ELAST
; [DATA1] : 2, ELAST, POISN, THERMAL, DEN, MASS
; [DATA1] : 3, Ex, Ey, Ez, Tx, Ty, Tz, Sxy, Sxz, Syz, Pxy, Pxz, Pyz, DEN, MASS
 ; Orthotropic
; [DATA2] : 1, STANDARD, CODE/PRODUCT, DB, USEELAST, ELAST or 2, ELAST, POISN, THERMAL
, DEN, MASS
    1, USER , MA                , 0, 0, , C, NO, 0.05, 2, 1.5000e+006,  0.45, 0.0000e+
000,    18,     0
    2, USER , MA rigid          , 0, 0, , C, NO, 0.05, 2, 1.5000e+008,  0.45, 0.0000e+
000,     9,     0
    3, USER , MB                , 0, 0, , C, NO, 0.05, 2, 4.5000e+006,  0.45, 0.0000e+
000,    12,     0
    4, USER , MB rigid          , 0, 0, , C, NO, 0.05, 2, 4.5000e+008,  0.45, 0.0000e+
000,     6,     0
    5, USER , C16/20rigid       , 0, 0, , C, NO, 0, 2, 2.8607e+009,   0.2, 0.0000e+000
,    25,     0
    6, CONC , C16/20            , 0, 0, , C, NO, 0.05, 1, EN04(RC)   ,            , C1
6/20        , NO, 2.8607e+007

*MATL-COLOR
; iMAT, W_R, W_G, W_B, HF_R, HF_G, HF_B, HE_R, HE_G, HE_B, bBLEND, FACT
    1,   0,   0,   0,  255, 128,  64,    0,   0,   0,  NO, 0.5
    2,   0,   0,   0,  255, 128, 128,    0,   0,   0,  NO, 0.5
    3,   0,   0,   0,    0, 128,   0,    0,   0,   0,  NO, 0.5
    4,   0,   0,   0,    0, 206, 103,    0,   0,   0,  NO, 0.5
    5, 128,   0, 128,  255,   0,   0,    0, 255,   0,  NO, 0.5
    6,   0,   0,   0,  192, 192, 192,    0,   0,   0,  NO, 0.5


*SECTION    ; Section
; iSEC, TYPE, SNAME, [OFFSET], bSD, bWE, SHAPE, [DATA1], [DATA2]                    ;
1st line - DB/USER
; iSEC, TYPE, SNAME, [OFFSET], bSD, bWE, SHAPE, BLT, D1, ..., D8, iCEL              ;
1st line - VALUE
;       AREA, ASy, ASz, Ixx, Iyy, Izz                                               ;
2nd line
;       CyP, CyM, CzP, CzM, QyB, QzB, PERI_OUT, PERI_IN, Cy, Cz                     ;
3rd line
;       Y1, Y2, Y3, Y4, Z1, Z2, Z3, Z4, Zyy, Zzz                                    ;
4th line
; iSEC, TYPE, SNAME, [OFFSET], bSD, bWE, SHAPE, ELAST, DEN, POIS, POIC, SF, THERMAL ;
1st line - SRC
;       D1, D2, [SRC]                                                               ;
2nd line
; iSEC, TYPE, SNAME, [OFFSET], bSD, bWE, SHAPE, 1, DB, NAME1, NAME2, D1, D2         ;
1st line - COMBINED
```

```
; iSEC, TYPE, SNAME, [OFFSET], bSD, bWE, SHAPE, 2, D11, D12, D13, D14, D15, D21, D22,
D23, D24
; iSEC, TYPE, SNAME, [OFFSET2], bSD, bWE, SHAPE, iyVAR, izVAR, STYPE                ;
1st line - TAPERED
;       DB, NAME1, NAME2                                                            ;
2nd line(STYPE=DB)
;       [DIM1], [DIM2]                                                              ;
2nd line(STYPE=USER)
;       D11, D12, D13, D14, D15, D16, D17, D18                                      ;
2nd line(STYPE=VALUE)
;       AREA1, ASy1, ASz1, Ixx1, Iyy1, Izz1                                         ;
3rd line(STYPE=VALUE)
;       CyP1, CyM1, CzP1, CzM1, QyB1, QzB1, PERI_OUT1, PERI_IN1, Cy1, Cz1           ;
4th line(STYPE=VALUE)
;       Y11, Y12, Y13, Y14, Z11, Z12, Z13, Z14, Zyy1, Zyy2                          ;
5th line(STYPE=VALUE)
;       D21, D22, D23, D24, D25, D26, D27, D28                                      ;
6th line(STYPE=VALUE)
;       AREA2, ASy2, ASz2, Ixx2, Iyy2, Izz2                                         ;
7th line(STYPE=VALUE)
;       CyP2, CyM2, CzP2, CzM2, QyB2, QzB2, PERI_OUT2, PERI_IN2, Cy2, Cz2           ;
8th line(STYPE=VALUE)
;       Y21, Y22, Y23, Y24, Z21, Z22, Z23, Z24, Zyy2, Zzz2                          ;
9th line(STYPE=VALUE)
; iSEC, TYPE, SNAME, [OFFSET], bSD, bWE, SHAPE                                      ;
1st line - COMPOSITE-B
;       Hw, tw, B1, Bf1, tf1, B2, Bf2, tf2                                          ;
2nd line
;       [SHAPE-NUM], [STIFF-SHAPE], [STIFF-POS] (1~4)                               ;
3rd line
;       SW, GN, CTC, Bc, Tc, Hh, EsEc, DsDc, Ps, Pc, TsTc, bMulti, Elong, Esh       ;
4th line
; iSEC, TYPE, SNAME, [OFFSET], bSD, bWE, SHAPE                                      ;
1st line - COMPOSITE-I
;       Hw, tw, B1, tf1, B2, tf2                                                    ;
2nd line
;       [SHAPE-NUM], [STIFF-SHAPE], [STIFF-POS] (1~2)                               ;
3rd line
;       SW, GN, CTC, Bc, Tc, Hh, EsEc, DsDc, Ps, Pc, TsTc, bMulti, Elong, Esh       ;
4th line
; iSEC, TYPE, SNAME, [OFFSET], bSD, bWE, SHAPE                                      ;
1st line - COMPOSITE-TUB
;       Hw, tw, B1, Bf1, tf1, B2, Bf2, tf2, Bf3, tfp                                ;
2nd line
;       [SHAPE-NUM], [STIFF-SHAPE], [STIFF-POS] (1~3)                               ;
3rd line
;       SW, GN, CTC, Bc, Tc, Hh, EsEc, DsDc, Ps, Pc, TsTc, bMulti, Elong, Esh       ;
4th line
; [DATA1] : 1, DB, NAME or 2, D1, D2, D3, D4, D5, D6, D7, D8, D9, D10
; [DATA2] : CCSHAPE or iCEL or iN1, iN2
; [SRC]  : 1, DB, NAME1, NAME2 or 2, D1, D2, D3, D4, D5, D6, D7, D8, D9, D10, iN1, iN2

; [DIM1], [DIM2] : D1, D2, D3, D4, D5, D6, D7, D8
; [OFFSET] : OFFSET, iCENT, iREF, iHORZ, HUSER, iVERT, VUSER
; [OFFSET2]: OFFSET, iCENT, iREF, iHORZ, HUSERI, HUSERJ, iVERT, VUSERI, VUSERJ
; [SHAPE-NUM]: SHAPE-NUM, POS, STIFF-NUM1, STIFF-NUM2, STIFF-NUM3, STIFF-NUM4
; [STIFF-SHAPE]: SHAPE-NUM, for(SHAPE-NUM) { NAME, SIZE1~8 }
; [STIFF-POS]: STIFF-NUM, for(STIFF-NUM) { SPACING, iSHAPE, bCALC }
    1, DBUSER    , L0_X1             , CC, 0, 0, 0, 0, 0, 0, YES, NO, SB , 2, 1.93, 0.
36, 0, 0, 0, 0, 0, 0, 0, 0
    2, DBUSER    , L0_X2             , CC, 0, 0, 0, 0, 0, 0, YES, NO, SB , 2, 0.65, 0.
36, 0, 0, 0, 0, 0, 0, 0, 0
```

```
    3, DBUSER    , L0_X2bis          , CC, 0, 0, 0, 0, 0, 0, YES, NO, SB , 2, 1.225, 0
.36, 0, 0, 0, 0, 0, 0, 0, 0
    4, DBUSER    , L0_X3             , CC, 0, 0, 0, 0, 0, 0, YES, NO, SB , 2, 1.83, 0.
36, 0, 0, 0, 0, 0, 0, 0, 0
    5, DBUSER    , L0_X4             , CC, 0, 0, 0, 0, 0, 0, YES, NO, SB , 2, 1.25, 0.
36, 0, 0, 0, 0, 0, 0, 0, 0
    6, DBUSER    , L0_X5             , CC, 0, 0, 0, 0, 0, 0, YES, NO, SB , 2, 0.47, 0.
36, 0, 0, 0, 0, 0, 0, 0, 0
    7, DBUSER    , L0_X6             , CC, 0, 0, 0, 0, 0, 0, YES, NO, SB , 2, 4.68, 0.
25, 0, 0, 0, 0, 0, 0, 0, 0
    8, DBUSER    , L0_X7             , CC, 0, 0, 0, 0, 0, 0, YES, NO, SB , 2, 1.53, 0.
25, 0, 0, 0, 0, 0, 0, 0, 0
    9, DBUSER    , L0_X8             , CC, 0, 0, 0, 0, 0, 0, YES, NO, SB , 2, 1.75, 0.
25, 0, 0, 0, 0, 0, 0, 0, 0
   10, DBUSER    , L0_X9             , CC, 0, 0, 0, 0, 0, 0, YES, NO, SB , 2, 1.33, 0.
25, 0, 0, 0, 0, 0, 0, 0, 0
   11, DBUSER    , L0_X10            , CC, 0, 0, 0, 0, 0, 0, YES, NO, SB , 2, 0.78, 0.
36, 0, 0, 0, 0, 0, 0, 0, 0
   12, DBUSER    , L0_X11            , CC, 0, 0, 0, 0, 0, 0, YES, NO, SB , 2, 2.95, 0.
36, 0, 0, 0, 0, 0, 0, 0, 0
   13, DBUSER    , L0_X12            , CC, 0, 0, 0, 0, 0, 0, YES, NO, SB , 2, 1.63, 0.
36, 0, 0, 0, 0, 0, 0, 0, 0
   14, DBUSER    , L0_X13            , CC, 0, 0, 0, 0, 0, 0, YES, NO, SB , 2, 0.75, 0.
25, 0, 0, 0, 0, 0, 0, 0, 0
   15, DBUSER    , L0_X14            , CC, 0, 0, 0, 0, 0, 0, YES, NO, SB , 2, 4.47, 0.
25, 0, 0, 0, 0, 0, 0, 0, 0
   16, DBUSER    , L0_X15            , CC, 0, 0, 0, 0, 0, 0, YES, NO, SB , 2, 4.83, 0.
25, 0, 0, 0, 0, 0, 0, 0, 0
   17, DBUSER    , L0_X16            , CC, 0, 0, 0, 0, 0, 0, YES, NO, SB , 2, 0.3, 0.3
6, 0, 0, 0, 0, 0, 0, 0, 0
   18, DBUSER    , L0_X17            , CC, 0, 0, 0, 0, 0, 0, YES, NO, SB , 2, 0.5, 0.3
6, 0, 0, 0, 0, 0, 0, 0, 0
   19, DBUSER    , L0_X18            , CC, 0, 0, 0, 0, 0, 0, YES, NO, SB , 2, 0.65, 0.
36, 0, 0, 0, 0, 0, 0, 0, 0
   22, DBUSER    , L0_X21            , CC, 0, 0, 0, 0, 0, 0, YES, NO, SB , 2, 3.68, 0.
25, 0, 0, 0, 0, 0, 0, 0, 0
   23, DBUSER    , L0_X22            , CC, 0, 0, 0, 0, 0, 0, YES, NO, SB , 2, 1.6, 0.2
5, 0, 0, 0, 0, 0, 0, 0, 0
   24, DBUSER    , L0_X23            , CC, 0, 0, 0, 0, 0, 0, YES, NO, SB , 2, 3.77, 0.
25, 0, 0, 0, 0, 0, 0, 0, 0
   25, DBUSER    , L0_X24            , CC, 0, 0, 0, 0, 0, 0, YES, NO, SB , 2, 0.95, 0.
25, 0, 0, 0, 0, 0, 0, 0, 0
   26, DBUSER    , L0_X25            , CC, 0, 0, 0, 0, 0, 0, YES, NO, SB , 2, 6.45, 0.
25, 0, 0, 0, 0, 0, 0, 0, 0
   27, DBUSER    , L0_X26            , CC, 0, 0, 0, 0, 0, 0, YES, NO, SB , 2, 4.83, 0.
25, 0, 0, 0, 0, 0, 0, 0, 0
   28, DBUSER    , L0_X27            , CC, 0, 0, 0, 0, 0, 0, YES, NO, SB , 2, 0.97, 0.
36, 0, 0, 0, 0, 0, 0, 0, 0
   29, DBUSER    , L0_X28            , CC, 0, 0, 0, 0, 0, 0, YES, NO, SB , 2, 1.19, 0.
36, 0, 0, 0, 0, 0, 0, 0, 0
   30, DBUSER    , L0_X29            , CC, 0, 0, 0, 0, 0, 0, YES, NO, SB , 2, 1, 0.36,
 0, 0, 0, 0, 0, 0, 0, 0
   31, DBUSER    , L0_X30            , CC, 0, 0, 0, 0, 0, 0, YES, NO, SB , 2, 0.29, 0.
36, 0, 0, 0, 0, 0, 0, 0, 0
   32, DBUSER    , L0_X31            , CC, 0, 0, 0, 0, 0, 0, YES, NO, SB , 2, 0.19, 0.
36, 0, 0, 0, 0, 0, 0, 0, 0
   33, DBUSER    , L0_X32            , CC, 0, 0, 0, 0, 0, 0, YES, NO, SB , 2, 0.29, 0.
36, 0, 0, 0, 0, 0, 0, 0, 0
   34, DBUSER    , L0_X33            , CC, 0, 0, 0, 0, 0, 0, YES, NO, SB , 2, 1.29, 0.
36, 0, 0, 0, 0, 0, 0, 0, 0
   35, DBUSER    , L0_X33bis         , CC, 0, 0, 0, 0, 0, 0, YES, NO, SB , 2, 0.95, 0.
36, 0, 0, 0, 0, 0, 0, 0, 0
```

```
   36, DBUSER    , L0_X34            , CC, 0, 0, 0, 0, 0, 0, YES, NO, SB , 2, 1.55, 0.
36, 0, 0, 0, 0, 0, 0, 0, 0
   37, DBUSER    , L0_X35            , CC, 0, 0, 0, 0, 0, 0, YES, NO, SB , 2, 6.35, 0.
36, 0, 0, 0, 0, 0, 0, 0, 0
   38, DBUSER    , L0_X22bis         , CC, 0, 0, 0, 0, 0, 0, YES, NO, SB , 2, 1.28, 0.
25, 0, 0, 0, 0, 0, 0, 0, 0
  100, DBUSER    , L0_Y01            , CC, 0, 0, 0, 0, 0, 0, YES, NO, SB , 2, 7.4, 0.3
6, 0, 0, 0, 0, 0, 0, 0, 0
  101, DBUSER    , L0_Y02            , CC, 0, 0, 0, 0, 0, 0, YES, NO, SB , 2, 1.62, 0.
25, 0, 0, 0, 0, 0, 0, 0, 0
  102, DBUSER    , L0_Y02bis         , CC, 0, 0, 0, 0, 0, 0, YES, NO, SB , 2, 2.18, 0.
25, 0, 0, 0, 0, 0, 0, 0, 0
  103, DBUSER    , L0_Y02tris        , CC, 0, 0, 0, 0, 0, 0, YES, NO, SB , 2, 3.55, 0.
25, 0, 0, 0, 0, 0, 0, 0, 0
  104, DBUSER    , L0_Y03            , CC, 0, 0, 0, 0, 0, 0, YES, NO, SB , 2, 1.54, 0.
36, 0, 0, 0, 0, 0, 0, 0, 0
  105, DBUSER    , L0_Y04            , CC, 0, 0, 0, 0, 0, 0, YES, NO, SB , 2, 1.2, 0.3
6, 0, 0, 0, 0, 0, 0, 0, 0
  106, DBUSER    , L0_Y04bis         , CC, 0, 0, 0, 0, 0, 0, YES, NO, SB , 2, 0.59, 0.
36, 0, 0, 0, 0, 0, 0, 0, 0
  107, DBUSER    , L0_Y05            , CC, 0, 0, 0, 0, 0, 0, YES, NO, SB , 2, 1.25, 0.
25, 0, 0, 0, 0, 0, 0, 0, 0
  108, DBUSER    , L0_Y06            , CC, 0, 0, 0, 0, 0, 0, YES, NO, SB , 2, 1.15, 0.
36, 0, 0, 0, 0, 0, 0, 0, 0
  109, DBUSER    , L0_Y07            , CC, 0, 0, 0, 0, 0, 0, YES, NO, SB , 2, 1.18, 0.
25, 0, 0, 0, 0, 0, 0, 0, 0
  110, DBUSER    , L0_Y08            , CC, 0, 0, 0, 0, 0, 0, YES, NO, SB , 2, 2.75, 0.
36, 0, 0, 0, 0, 0, 0, 0, 0
  111, DBUSER    , L0_Y09            , CC, 0, 0, 0, 0, 0, 0, YES, NO, SB , 2, 6.43, 0.
25, 0, 0, 0, 0, 0, 0, 0, 0
  112, DBUSER    , L0_Y10            , CC, 0, 0, 0, 0, 0, 0, YES, NO, SB , 2, 6.43, 0.
25, 0, 0, 0, 0, 0, 0, 0, 0
  113, DBUSER    , L0_Y11            , CC, 0, 0, 0, 0, 0, 0, YES, NO, SB , 2, 6.43, 0.
36, 0, 0, 0, 0, 0, 0, 0, 0
  114, DBUSER    , L0 Y12            , CC, 0, 0, 0, 0, 0, 0, YES, NO, SB , 2, 0.84, 0.
36, 0, 0, 0, 0, 0, 0, 0, 0
  115, DBUSER    , L0_Y13            , CC, 0, 0, 0, 0, 0, 0, YES, NO, SB , 2, 0.83, 0.
25, 0, 0, 0, 0, 0, 0, 0, 0
  116, DBUSER    , L0_Y14            , CC, 0, 0, 0, 0, 0, 0, YES, NO, SB , 2, 2.55, 0.
36, 0, 0, 0, 0, 0, 0, 0, 0
  117, DBUSER    , L0 Y14bis         , CC, 0, 0, 0, 0, 0, 0, YES, NO, SB , 2, 4.11, 0.
25, 0, 0, 0, 0, 0, 0, 0, 0
  118, DBUSER    , L0_Y15            , CC, 0, 0, 0, 0, 0, 0, YES, NO, SB , 2, 1.37, 0.
36, 0, 0, 0, 0, 0, 0, 0, 0
  119, DBUSER    , L0_Y16            , CC, 0, 0, 0, 0, 0, 0, YES, NO, SB , 2, 5.61, 0.
36, 0, 0, 0, 0, 0, 0, 0, 0
  120, DBUSER    , L0_Y17            , CC, 0, 0, 0, 0, 0, 0, YES, NO, SB , 2, 4.69, 0.
25, 0, 0, 0, 0, 0, 0, 0, 0
  121, DBUSER    , L0_Y17bis         , CC, 0, 0, 0, 0, 0, 0, YES, NO, SB , 2, 1.35, 0.
25, 0, 0, 0, 0, 0, 0, 0, 0
  122, DBUSER    , L0_Y18            , CC, 0, 0, 0, 0, 0, 0, YES, NO, SB , 2, 1.79, 0.
36, 0, 0, 0, 0, 0, 0, 0, 0
  700, DBUSER    , Pilastro fitt     , CC, 0, 0, 0, 0, 0, 0, YES, NO, SB , 2, 0.248, 0
.248, 0, 0, 0, 0, 0, 0, 0, 0
  701, DBUSER    , cordolo 40x21     , CC, 0, 0, 0, 0, 0, 0, YES, NO, SB , 2, 0.21, 0.
4, 0, 0, 0, 0, 0, 0, 0, 0
  702, DBUSER    , cordolo 30x21     , CC, 0, 0, 0, 0, 0, 0, YES, NO, SB , 2, 0.21, 0.
3, 0, 0, 0, 0, 0, 0, 0, 0
  703, DBUSER    , cordolo RIGID     , CC, 0, 0, 0, 0, 0, 0, YES, NO, SB , 2, 0.2, 0.4
, 0, 0, 0, 0, 0, 0, 0, 0
  704, DBUSER    , cordolo fitt      , CC, 0, 0, 0, 0, 0, 0, YES, NO, SB , 2, 0.2, 0.2
5, 0, 0, 0, 0, 0, 0, 0, 0
```

```
  707, DBUSER    , Pilastro 50x25    , CC, 0, 0, 0, 0, 0, 0, YES, NO, SB , 2, 0.5, 0.2
5, 0, 0, 0, 0, 0, 0, 0, 0
  708, DBUSER    , Trave             , CC, 0, 0, 0, 0, 0, 0, YES, NO, SB , 2, 0.25, 0.
55, 0, 0, 0, 0, 0, 0, 0, 0
  709, DBUSER    , Fascia 0.60x0.36  , CC, 0, 0, 0, 0, 0, 0, YES, NO, SB , 2, 0.6, 0.3
6, 0, 0, 0, 0, 0, 0, 0, 0
  710, DBUSER    , Fascia 1.45x0.25  , CC, 0, 0, 0, 0, 0, 0, YES, NO, SB , 2, 1.45, 0.
25, 0, 0, 0, 0, 0, 0, 0, 0
  711, DBUSER    , Fascia 0.95x0.25  , CC, 0, 0, 0, 0, 0, 0, YES, NO, SB , 2, 0.95, 0.
25, 0, 0, 0, 0, 0, 0, 0, 0
  712, DBUSER    , Fascia 0.45x0.36  , CC, 0, 0, 0, 0, 0, 0, YES, NO, SB , 2, 0.45, 0.
36, 0, 0, 0, 0, 0, 0, 0, 0
 1000, DBUSER    , LINE              , CC, 0, 0, 0, 0, 0, 0, YES, NO, SB , 2, 0.01, 0.
01, 0, 0, 0, 0, 0, 0, 0, 0

*SECT-COLOR
; iSEC, W_R, W_G, W_B, HF_R, HF_G, HF_B, HE_R, HE_G, HE_B, bBLEND, FACT
    1, 128,   0, 128,  255,   0,   0,    0, 255,   0,  NO, 0.5
    2, 128,   0, 128,  255,   0,   0,    0, 255,   0,  NO, 0.5
    3, 128,   0, 128,  255,   0,   0,    0, 255,   0,  NO, 0.5
    4, 128,   0, 128,  255,   0,   0,    0, 255,   0,  NO, 0.5
    5, 128,   0, 128,  255,   0,   0,    0, 255,   0,  NO, 0.5
    6, 128,   0, 128,  255,   0,   0,    0, 255,   0,  NO, 0.5
    7, 128,   0, 128,  255,   0,   0,    0, 255,   0,  NO, 0.5
    8, 128,   0, 128,  255,   0,   0,    0, 255,   0,  NO, 0.5
    9, 128,   0, 128,  255,   0,   0,    0, 255,   0,  NO, 0.5
   10, 128,   0, 128,  255,   0,   0,    0, 255,   0,  NO, 0.5
   11, 128,   0, 128,  255,   0,   0,    0, 255,   0,  NO, 0.5
   12, 128,   0, 128,  255,   0,   0,    0, 255,   0,  NO, 0.5
   13, 128,   0, 128,  255,   0,   0,    0, 255,   0,  NO, 0.5
   14, 128,   0, 128,  255,   0,   0,    0, 255,   0,  NO, 0.5
   15, 128,   0, 128,  255,   0,   0,    0, 255,   0,  NO, 0.5
   16, 128,   0, 128,  255,   0,   0,    0, 255,   0,  NO, 0.5
   17, 128,   0, 128,  255,   0,   0,    0, 255,   0,  NO, 0.5
   18, 128,   0, 128,  255,   0,   0,    0, 255,   0,  NO, 0.5
   19, 128,   0, 128,  255,   0,   0,    0, 255,   0,  NO, 0.5
   22, 128,   0, 128,  255,   0,   0,    0, 255,   0,  NO, 0.5
   23, 128,   0, 128,  255,   0,   0,    0, 255,   0,  NO, 0.5
   24, 128,   0, 128,  255,   0,   0,    0, 255,   0,  NO, 0.5
   25, 128,   0, 128,  255,   0,   0,    0, 255,   0,  NO, 0.5
   26, 128,   0, 128,  255,   0,   0,    0, 255,   0,  NO, 0.5
   27, 128,   0, 128,  255,   0,   0,    0, 255,   0,  NO, 0.5
   28, 128,   0, 128,  255,   0,   0,    0, 255,   0,  NO, 0.5
   29, 128,   0, 128,  255,   0,   0,    0, 255,   0,  NO, 0.5
   30, 128,   0, 128,  255,   0,   0,    0, 255,   0,  NO, 0.5
   31, 128,   0, 128,  255,   0,   0,    0, 255,   0,  NO, 0.5
   32, 128,   0, 128,  255,   0,   0,    0, 255,   0,  NO, 0.5
   33, 128,   0, 128,  255,   0,   0,    0, 255,   0,  NO, 0.5
   34, 128,   0, 128,  255,   0,   0,    0, 255,   0,  NO, 0.5
   35, 128,   0, 128,  255,   0,   0,    0, 255,   0,  NO, 0.5
   36, 128,   0, 128,  255,   0,   0,    0, 255,   0,  NO, 0.5
   37, 128,   0, 128,  255,   0,   0,    0, 255,   0,  NO, 0.5
   38, 128,   0, 128,  255,   0,   0,    0, 255,   0,  NO, 0.5
  100, 128,   0, 128,  255,   0,   0,    0, 255,   0,  NO, 0.5
  101, 128,   0, 128,  255,   0,   0,    0, 255,   0,  NO, 0.5
  102, 128,   0, 128,  255,   0,   0,    0, 255,   0,  NO, 0.5
  103, 128,   0, 128,  255,   0,   0,    0, 255,   0,  NO, 0.5
  104, 128,   0, 128,  255,   0,   0,    0, 255,   0,  NO, 0.5
  105, 128,   0, 128,  255,   0,   0,    0, 255,   0,  NO, 0.5
  106, 128,   0, 128,  255,   0,   0,    0, 255,   0,  NO, 0.5
  107, 128,   0, 128,  255,   0,   0,    0, 255,   0,  NO, 0.5
  108, 128,   0, 128,  255,   0,   0,    0, 255,   0,  NO, 0.5
```

```
  109, 128,   0, 128,  255,   0,   0,    0, 255,   0,  NO, 0.5
  110, 128,   0, 128,  255,   0,   0,    0, 255,   0,  NO, 0.5
  111, 128,   0, 128,  255,   0,   0,    0, 255,   0,  NO, 0.5
  112, 128,   0, 128,  255,   0,   0,    0, 255,   0,  NO, 0.5
  113, 128,   0, 128,  255,   0,   0,    0, 255,   0,  NO, 0.5
  114, 128,   0, 128,  255,   0,   0,    0, 255,   0,  NO, 0.5
  115, 128,   0, 128,  255,   0,   0,    0, 255,   0,  NO, 0.5
  116, 128,   0, 128,  255,   0,   0,    0, 255,   0,  NO, 0.5
  117, 128,   0, 128,  255,   0,   0,    0, 255,   0,  NO, 0.5
  118, 128,   0, 128,  255,   0,   0,    0, 255,   0,  NO, 0.5
  119, 128,   0, 128,  255,   0,   0,    0, 255,   0,  NO, 0.5
  120, 128,   0, 128,  255,   0,   0,    0, 255,   0,  NO, 0.5
  121, 128,   0, 128,  255,   0,   0,    0, 255,   0,  NO, 0.5
  122, 128,   0, 128,  255,   0,   0,    0, 255,   0,  NO, 0.5
  700, 128,   0, 128,  255,   0,   0,    0, 255,   0,  NO, 0.5
  701, 128,   0, 128,  255,   0,   0,    0, 255,   0,  NO, 0.5
  702, 128,   0, 128,  255,   0,   0,    0, 255,   0,  NO, 0.5
  703, 128,   0, 128,  255,   0,   0,    0, 255,   0,  NO, 0.5
  704, 128,   0, 128,  255,   0,   0,    0, 255,   0,  NO, 0.5
  707, 128,   0, 128,  255,   0,   0,    0, 255,   0,  NO, 0.5
  708, 128,   0, 128,  255,   0,   0,    0, 255,   0,  NO, 0.5
  709, 128,   0, 128,  255,   0,   0,    0, 255,   0,  NO, 0.5
  710, 128,   0, 128,  255,   0,   0,    0, 255,   0,  NO, 0.5
  711, 128,   0, 128,  255,   0,   0,    0, 255,   0,  NO, 0.5
  712, 128,   0, 128,  255,   0,   0,    0, 255,   0,  NO, 0.5
 1000, 128,   0, 128,  255,   0,   0,    0, 255,   0,  NO, 0.5

*SECT-SCALE    ; Section Stiffness Scale Factor
; iSEC, AREA_SF, ASY_SF, ASZ_SF, IXX_SF, IYY_SF, IZZ_SF, WGT_SF, GROUP, iPart ; line 1
  703, 1, 100, 100, 1, 100, 100, 1, , 1
  704, 1, 1, 1, 1, 1, 1, 0.001, , 1

*DGN-SECT
; iSEC, TYPE, SNAME, [OFFSET], bSD, bWE, SHAPE, [DATA1], [DATA2]                    ;
1st line - DB/USER
; iSEC, TYPE, SNAME, [OFFSET], bSD, bWE, SHAPE, BLT, D1, ..., D8, iCEL              ;
1st line - VALUE
;       AREA, ASy, ASz, Ixx, Iyy, Izz                                               ;
2nd line
;       CyP, CyM, CzP, CzM, QyB, QzB, PERI_OUT, PERI_IN, Cy, Cz                     ;
3rd line
;       Y1, Y2, Y3, Y4, Z1, Z2, Z3, Z4, Zyy, Zzz                                    ;
4th line
; iSEC, TYPE, SNAME, [OFFSET], bSD, bWE, SHAPE, ELAST, DEN, POIS, POIC, SF, THERMAL ;
1st line - SRC
;       D1, D2, [SRC]                                                               ;
2nd line
; iSEC, TYPE, SNAME, [OFFSET], bSD, bWE, SHAPE, 1, DB, NAME1, NAME2, D1, D2         ;
1st line - COMBINED
; iSEC, TYPE, SNAME, [OFFSET], bSD, bWE, SHAPE, 2, D11, D12, D13, D14, D15, D21, D22,
D23, D24
; iSEC, TYPE, SNAME, [OFFSET2], bSD, bWE, SHAPE, iyVAR, izVAR, STYPE                ;
1st line - TAPERED
;       DB, NAME1, NAME2                                                            ;
2nd line(STYPE=DB)
;       [DIM1], [DIM2]                                                              ;
2nd line(STYPE=USER)
;       D11, D12, D13, D14, D15, D16, D17, D18                                      ;
2nd line(STYPE=VALUE)
;       AREA1, ASy1, ASz1, Ixx1, Iyy1, Izz1                                         ;
3rd line(STYPE=VALUE)
;       CyP1, CyM1, CzP1, CzM1, QyB1, QzB1, PERI_OUT1, PERI_IN1, Cy1, Cz1           ;
```

```
4th line(STYPE=VALUE)
;       Y11, Y12, Y13, Y14, Z11, Z12, Z13, Z14, Zyy1, Zyy2                          ;
5th line(STYPE=VALUE)
;       D21, D22, D23, D24, D25, D26, D27, D28                                      ;
6th line(STYPE=VALUE)
;       AREA2, ASy2, ASz2, Ixx2, Iyy2, Izz2                                         ;
7th line(STYPE=VALUE)
;       CyP2, CyM2, CzP2, CzM2, QyB2, QzB2, PERI_OUT2, PERI_IN2, Cy2, Cz2           ;
8th line(STYPE=VALUE)
;       Y21, Y22, Y23, Y24, Z21, Z22, Z23, Z24, Zyy2, Zzz2                          ;
9th line(STYPE=VALUE)
; iSEC, TYPE, SNAME, [OFFSET], bSD, bWE, SHAPE                                      ;
1st line - COMPOSITE-B
;       Hw, tw, B1, Bf1, tf1, B2, Bf2, tf2                                          ;
2nd line
;       [SHAPE-NUM], [STIFF-SHAPE], [STIFF-POS] (1~4)                               ;
3rd line
;       SW, GN, CTC, Bc, Tc, Hh, EsEc, DsDc, Ps, Pc, TsTc, bMulti, Elong, Esh       ;
4th line
; iSEC, TYPE, SNAME, [OFFSET], bSD, bWE, SHAPE                                      ;
1st line - COMPOSITE-I
;       Hw, tw, B1, tf1, B2, tf2                                                    ;
2nd line
;       [SHAPE-NUM], [STIFF-SHAPE], [STIFF-POS] (1~2)                               ;
3rd line
;       SW, GN, CTC, Bc, Tc, Hh, EsEc, DsDc, Ps, Pc, TsTc, bMulti, Elong, Esh       ;
4th line
; iSEC, TYPE, SNAME, [OFFSET], bSD, bWE, SHAPE                                      ;
1st line - COMPOSITE-TUB
;       Hw, tw, B1, Bf1, tf1, B2, Bf2, tf2, Bf3, tfp                                ;
2nd line
;       [SHAPE-NUM], [STIFF-SHAPE], [STIFF-POS] (1~3)                               ;
3rd line
;       SW, GN, CTC, Bc, Tc, Hh, EsEc, DsDc, Ps, Pc, TsTc, bMulti, Elong, Esh       ;
4th line
; [DATA1] : 1, DB, NAME or 2, D1, D2, D3, D4, D5, D6, D7, D8, D9, D10
; [DATA2] : CCSHAPE or iCEL or iN1, iN2
; [SRC]  : 1, DB, NAME1, NAME2 or 2, D1, D2, D3, D4, D5, D6, D7, D8, D9, D10, iN1, iN2

; [DIM1], [DIM2] : D1, D2, D3, D4, D5, D6, D7, D8
; [OFFSET] : OFFSET, iCENT, iREF, iHORZ, HUSER, iVERT, VUSER
; [OFFSET2]: OFFSET, iCENT, iREF, iHORZ, HUSERI, HUSERJ, iVERT, VUSERI, VUSERJ
; [SHAPE-NUM]: SHAPE-NUM, POS, STIFF-NUM1, STIFF-NUM2, STIFF-NUM3, STIFF-NUM4
; [STIFF-SHAPE]: SHAPE-NUM, for(SHAPE-NUM) { NAME, SIZE1~8 }
; [STIFF-POS]: STIFF-NUM, for(STIFF-NUM) { SPACING, iSHAPE, bCALC }
    1, DBUSER    , L0_X1             , CC, 0, 0, 0, 0, 0, 0, YES, NO, SB , 2, 1.93, 0.
36, 0, 0, 0, 0, 0, 0, 0, 0
    2, DBUSER    , L0_X2             , CC, 0, 0, 0, 0, 0, 0, YES, NO, SB , 2, 0.65, 0.
36, 0, 0, 0, 0, 0, 0, 0, 0
    3, DBUSER    , L0_X2bis          , CC, 0, 0, 0, 0, 0, 0, YES, NO, SB , 2, 1.225, 0
.36, 0, 0, 0, 0, 0, 0, 0, 0
    4, DBUSER    , L0_X3             , CC, 0, 0, 0, 0, 0, 0, YES, NO, SB , 2, 1.83, 0.
36, 0, 0, 0, 0, 0, 0, 0, 0
    5, DBUSER    , L0_X4             , CC, 0, 0, 0, 0, 0, 0, YES, NO, SB , 2, 1.25, 0.
36, 0, 0, 0, 0, 0, 0, 0, 0
    6, DBUSER    , L0_X5             , CC, 0, 0, 0, 0, 0, 0, YES, NO, SB , 2, 0.47, 0.
36, 0, 0, 0, 0, 0, 0, 0, 0
    7, DBUSER    , L0_X6             , CC, 0, 0, 0, 0, 0, 0, YES, NO, SB , 2, 4.68, 0.
25, 0, 0, 0, 0, 0, 0, 0, 0
    8, DBUSER    , L0_X7             , CC, 0, 0, 0, 0, 0, 0, YES, NO, SB , 2, 1.53, 0.
25, 0, 0, 0, 0, 0, 0, 0, 0
    9, DBUSER    , L0_X8             , CC, 0, 0, 0, 0, 0, 0, YES, NO, SB , 2, 1.75, 0.
```

```
25, 0, 0, 0, 0, 0, 0, 0, 0
   10, DBUSER    , L0_X9            , CC, 0, 0, 0, 0, 0, 0, YES, NO, SB , 2, 1.33, 0.
25, 0, 0, 0, 0, 0, 0, 0, 0
   11, DBUSER    , L0_X10           , CC, 0, 0, 0, 0, 0, 0, YES, NO, SB , 2, 0.78, 0.
36, 0, 0, 0, 0, 0, 0, 0, 0
   12, DBUSER    , L0_X11           , CC, 0, 0, 0, 0, 0, 0, YES, NO, SB , 2, 2.95, 0.
36, 0, 0, 0, 0, 0, 0, 0, 0
   13, DBUSER    , L0_X12           , CC, 0, 0, 0, 0, 0, 0, YES, NO, SB , 2, 1.63, 0.
36, 0, 0, 0, 0, 0, 0, 0, 0
   14, DBUSER    , L0_X13           , CC, 0, 0, 0, 0, 0, 0, YES, NO, SB , 2, 0.75, 0.
25, 0, 0, 0, 0, 0, 0, 0, 0
   15, DBUSER    , L0_X14           , CC, 0, 0, 0, 0, 0, 0, YES, NO, SB , 2, 4.47, 0.
25, 0, 0, 0, 0, 0, 0, 0, 0
   16, DBUSER    , L0_X15           , CC, 0, 0, 0, 0, 0, 0, YES, NO, SB , 2, 4.83, 0.
25, 0, 0, 0, 0, 0, 0, 0, 0
   17, DBUSER    , L0_X16           , CC, 0, 0, 0, 0, 0, 0, YES, NO, SB , 2, 0.3, 0.3
6, 0, 0, 0, 0, 0, 0, 0, 0
   18, DBUSER    , L0_X17           , CC, 0, 0, 0, 0, 0, 0, YES, NO, SB , 2, 0.5, 0.3
6, 0, 0, 0, 0, 0, 0, 0, 0
   19, DBUSER    , L0_X18           , CC, 0, 0, 0, 0, 0, 0, YES, NO, SB , 2, 0.65, 0.
36, 0, 0, 0, 0, 0, 0, 0, 0
   22, DBUSER    , L0_X21           , CC, 0, 0, 0, 0, 0, 0, YES, NO, SB , 2, 3.68, 0.
25, 0, 0, 0, 0, 0, 0, 0, 0
   23, DBUSER    , L0_X22           , CC, 0, 0, 0, 0, 0, 0, YES, NO, SB , 2, 1.6, 0.2
5, 0, 0, 0, 0, 0, 0, 0, 0
   24, DBUSER    , L0_X23           , CC, 0, 0, 0, 0, 0, 0, YES, NO, SB , 2, 3.77, 0.
25, 0, 0, 0, 0, 0, 0, 0, 0
   25, DBUSER    , L0_X24           , CC, 0, 0, 0, 0, 0, 0, YES, NO, SB , 2, 0.95, 0.
25, 0, 0, 0, 0, 0, 0, 0, 0
   26, DBUSER    , L0_X25           , CC, 0, 0, 0, 0, 0, 0, YES, NO, SB , 2, 6.45, 0.
25, 0, 0, 0, 0, 0, 0, 0, 0
   27, DBUSER    , L0_X26           , CC, 0, 0, 0, 0, 0, 0, YES, NO, SB , 2, 4.83, 0.
25, 0, 0, 0, 0, 0, 0, 0, 0
   28, DBUSER    , L0_X27           , CC, 0, 0, 0, 0, 0, 0, YES, NO, SB , 2, 0.97, 0.
36, 0, 0, 0, 0, 0, 0, 0, 0
   29, DBUSER    , L0_X28           , CC, 0, 0, 0, 0, 0, 0, YES, NO, SB , 2, 1.19, 0.
36, 0, 0, 0, 0, 0, 0, 0, 0
   30, DBUSER    , L0_X29           , CC, 0, 0, 0, 0, 0, 0, YES, NO, SB , 2, 1, 0.36,
 0, 0, 0, 0, 0, 0, 0, 0
   31, DBUSER    , L0_X30           , CC, 0, 0, 0, 0, 0, 0, YES, NO, SB , 2, 0.29, 0.
36, 0, 0, 0, 0, 0, 0, 0, 0
   32, DBUSER    , L0_X31           , CC, 0, 0, 0, 0, 0, 0, YES, NO, SB , 2, 0.19, 0.
36, 0, 0, 0, 0, 0, 0, 0, 0
   33, DBUSER    , L0_X32           , CC, 0, 0, 0, 0, 0, 0, YES, NO, SB , 2, 0.29, 0.
36, 0, 0, 0, 0, 0, 0, 0, 0
   34, DBUSER    , L0_X33           , CC, 0, 0, 0, 0, 0, 0, YES, NO, SB , 2, 1.29, 0.
36, 0, 0, 0, 0, 0, 0, 0, 0
   35, DBUSER    , L0_X33bis        , CC, 0, 0, 0, 0, 0, 0, YES, NO, SB , 2, 0.95, 0.
36, 0, 0, 0, 0, 0, 0, 0, 0
   36, DBUSER    , L0_X34           , CC, 0, 0, 0, 0, 0, 0, YES, NO, SB , 2, 1.55, 0.
36, 0, 0, 0, 0, 0, 0, 0, 0
   37, DBUSER    , L0_X35           , CC, 0, 0, 0, 0, 0, 0, YES, NO, SB , 2, 6.35, 0.
36, 0, 0, 0, 0, 0, 0, 0, 0
   38, DBUSER    , L0_X22bis        , CC, 0, 0, 0, 0, 0, 0, YES, NO, SB , 2, 1.28, 0.
25, 0, 0, 0, 0, 0, 0, 0, 0
  100, DBUSER    , L0_Y01           , CC, 0, 0, 0, 0, 0, 0, YES, NO, SB , 2, 7.4, 0.3
6, 0, 0, 0, 0, 0, 0, 0, 0
  101, DBUSER    , L0_Y02           , CC, 0, 0, 0, 0, 0, 0, YES, NO, SB , 2, 1.62, 0.
25, 0, 0, 0, 0, 0, 0, 0, 0
  102, DBUSER    , L0_Y02bis        , CC, 0, 0, 0, 0, 0, 0, YES, NO, SB , 2, 2.18, 0.
25, 0, 0, 0, 0, 0, 0, 0, 0
  103, DBUSER    , L0_Y02tris       , CC, 0, 0, 0, 0, 0, 0, YES, NO, SB , 2, 3.55, 0.
```

```
25, 0, 0, 0, 0, 0, 0, 0, 0
  104, DBUSER    , L0_Y03            , CC, 0, 0, 0, 0, 0, 0, YES, NO, SB , 2, 1.54, 0.
36, 0, 0, 0, 0, 0, 0, 0, 0
  105, DBUSER    , L0_Y04            , CC, 0, 0, 0, 0, 0, 0, YES, NO, SB , 2, 1.2, 0.3
6, 0, 0, 0, 0, 0, 0, 0, 0
  106, DBUSER    , L0_Y04bis         , CC, 0, 0, 0, 0, 0, 0, YES, NO, SB , 2, 0.59, 0.
36, 0, 0, 0, 0, 0, 0, 0, 0
  107, DBUSER    , L0_Y05            , CC, 0, 0, 0, 0, 0, 0, YES, NO, SB , 2, 1.25, 0.
25, 0, 0, 0, 0, 0, 0, 0, 0
  108, DBUSER    , L0_Y06            , CC, 0, 0, 0, 0, 0, 0, YES, NO, SB , 2, 1.15, 0.
36, 0, 0, 0, 0, 0, 0, 0, 0
  109, DBUSER    , L0_Y07            , CC, 0, 0, 0, 0, 0, 0, YES, NO, SB , 2, 1.18, 0.
25, 0, 0, 0, 0, 0, 0, 0, 0
  110, DBUSER    , L0_Y08            , CC, 0, 0, 0, 0, 0, 0, YES, NO, SB , 2, 2.75, 0.
36, 0, 0, 0, 0, 0, 0, 0, 0
  111, DBUSER    , L0_Y09            , CC, 0, 0, 0, 0, 0, 0, YES, NO, SB , 2, 6.43, 0.
25, 0, 0, 0, 0, 0, 0, 0, 0
  112, DBUSER    , L0_Y10            , CC, 0, 0, 0, 0, 0, 0, YES, NO, SB , 2, 6.43, 0.
25, 0, 0, 0, 0, 0, 0, 0, 0
  113, DBUSER    , L0_Y11            , CC, 0, 0, 0, 0, 0, 0, YES, NO, SB , 2, 6.43, 0.
36, 0, 0, 0, 0, 0, 0, 0, 0
  114, DBUSER    , L0_Y12            , CC, 0, 0, 0, 0, 0, 0, YES, NO, SB , 2, 0.84, 0.
36, 0, 0, 0, 0, 0, 0, 0, 0
  115, DBUSER    , L0_Y13            , CC, 0, 0, 0, 0, 0, 0, YES, NO, SB , 2, 0.83, 0.
25, 0, 0, 0, 0, 0, 0, 0, 0
  116, DBUSER    , L0_Y14            , CC, 0, 0, 0, 0, 0, 0, YES, NO, SB , 2, 2.55, 0.
36, 0, 0, 0, 0, 0, 0, 0, 0
  117, DBUSER    , L0_Y14bis         , CC, 0, 0, 0, 0, 0, 0, YES, NO, SB , 2, 4.11, 0.
25, 0, 0, 0, 0, 0, 0, 0, 0
  118, DBUSER    , L0_Y15            , CC, 0, 0, 0, 0, 0, 0, YES, NO, SB , 2, 1.37, 0.
36, 0, 0, 0, 0, 0, 0, 0, 0
  119, DBUSER    , L0_Y16            , CC, 0, 0, 0, 0, 0, 0, YES, NO, SB , 2, 5.61, 0.
36, 0, 0, 0, 0, 0, 0, 0, 0
  120, DBUSER    , L0_Y17            , CC, 0, 0, 0, 0, 0, 0, YES, NO, SB , 2, 4.69, 0.
25, 0, 0, 0, 0, 0, 0, 0, 0
  121, DBUSER    , L0_Y17bis         , CC, 0, 0, 0, 0, 0, 0, YES, NO, SB , 2, 1.35, 0.
25, 0, 0, 0, 0, 0, 0, 0, 0
  122, DBUSER    , L0_Y18            , CC, 0, 0, 0, 0, 0, 0, YES, NO, SB , 2, 1.79, 0.
36, 0, 0, 0, 0, 0, 0, 0, 0
  700, DBUSER    , Pilastro fitt     , CC, 0, 0, 0, 0, 0, 0, YES, NO, SB , 2, 0.248, 0
.248, 0, 0, 0, 0, 0, 0, 0, 0
  701, DBUSER    , cordolo 40x21     , CC, 0, 0, 0, 0, 0, 0, YES, NO, SB , 2, 0.21, 0.
4, 0, 0, 0, 0, 0, 0, 0, 0
  702, DBUSER    , cordolo 30x21     , CC, 0, 0, 0, 0, 0, 0, YES, NO, SB , 2, 0.21, 0.
3, 0, 0, 0, 0, 0, 0, 0, 0
  703, DBUSER    , cordolo RIGID     , CC, 0, 0, 0, 0, 0, 0, YES, NO, SB , 2, 0.2, 0.4
, 0, 0, 0, 0, 0, 0, 0, 0
  704, DBUSER    , cordolo fitt      , CC, 0, 0, 0, 0, 0, 0, YES, NO, SB , 2, 0.2, 0.2
5, 0, 0, 0, 0, 0, 0, 0, 0
  707, DBUSER    , Pilastro 50x25    , CC, 0, 0, 0, 0, 0, 0, YES, NO, SB , 2, 0.5, 0.2
5, 0, 0, 0, 0, 0, 0, 0, 0
  708, DBUSER    , Trave             , CC, 0, 0, 0, 0, 0, 0, YES, NO, SB , 2, 0.25, 0.
55, 0, 0, 0, 0, 0, 0, 0, 0
  709, DBUSER    , Fascia 0.60x0.36  , CC, 0, 0, 0, 0, 0, 0, YES, NO, SB , 2, 0.6, 0.3
6, 0, 0, 0, 0, 0, 0, 0, 0
  710, DBUSER    , Fascia 1.45x0.25  , CC, 0, 0, 0, 0, 0, 0, YES, NO, SB , 2, 1.45, 0.
25, 0, 0, 0, 0, 0, 0, 0, 0
  711, DBUSER    , Fascia 0.95x0.25  , CC, 0, 0, 0, 0, 0, 0, YES, NO, SB , 2, 0.95, 0.
25, 0, 0, 0, 0, 0, 0, 0, 0
  712, DBUSER    , Fascia 0.45x0.36  , CC, 0, 0, 0, 0, 0, 0, YES, NO, SB , 2, 0.45, 0.
36, 0, 0, 0, 0, 0, 0, 0, 0
 1000, DBUSER    , LINE              , CC, 0, 0, 0, 0, 0, 0, YES, NO, SB , 2, 0.01, 0.
```

```
01, 0, 0, 0, 0, 0, 0, 0, 0

*STLDCASE    ; Static Load Cases
; LCNAME, LCTYPE, DESC
   PP   , D ,
   G1+G2 copertura A, D ,
   G1+G2 copertura B, D ,
   Q sottotetto, L ,
   sporto gronda, D ,
   Q neve, L ,
   SISMA X, E ,
   SISMA Y, E ,
   travi, D ,
   parapetto, D ,
   muro , D ,


*STORY    ; Story
;  NAME=NAME, LEVEL, bFLDIAP, WINDWX, WINDWY, WINDCX, WINDCY, ECCX, ECCY, IECCX, IECCY
, TAFX, TAFY, WTAFX, WTAFY, AreaPosNum ; line 1
;       AreaPosX1, AreaPosY1, AreaPosZ1, ...
                                        ; from line 2
   NAME=1F, -1, NO , 28.35, 18.4112, 15.575, 19.1056, 1.4175, 0.920562, 0, 0, 1, 1, 4.
2525, 2.76169, 0
   NAME=Roof, 3.35, YES, 28.35, 18.4112, 15.575, 19.1056, 1.4175, 0.920562, 0, 0, 1, 1
, 4.2525, 2.76169, 0

*STORY-CHANGED-INFO    ; Story Changed Information
; iCHANGEDINFO
 0

*STORY-ECCEN    ; Story Eccentricity
; bIncludeEccSeis, bIncludeEccWind, EccSeis, EccWind
 YES, YES, 5, 15

*DGN-CONC    ; Concrete Design Code
; CODE=CODE, RHOC, RHOR, RHOW, MRF, SHR-RATIO { , METHOD, A1, A2, A2_COLM, bSCWB }
 ; line 1
; [ACI318-89]     : bSPECIAL, PHI-B, PHI-T, PHIC1, PHI-C2, PHI-V
 ; line 2
; [ACI318-95]     : bSPECIAL, PHI-B, PHI-T, PHIC1, PHI-C2, PHI-V
 ; line 2
; [ACI318-99]     : bSPECIAL, PHI-B, PHI-T, PHIC1, PHI-C2, PHI-V
 ; line 2
; [ACI318-02]     : bSPECIAL, PHI-B, PHI-T, PHIC1, PHI-C2, PHI-V, TLF, SLF, TSLCB
 ; line 2
; [ACI318-05]     : bSPECIAL, PHI-B, PHI-T, PHIC1, PHI-C2, PHI-V, TLF, SLF, TSLCB
 ; line 2
; [ACI318-08]     : bSPECIAL, PHI-B, PHI-T, PHIC1, PHI-C2, PHI-V, TLF, SLF, TSLCB, SPW
ALL, BNDR-MTHD, CD, IE, FRMTYPE, 2NDGRUP, RHOS, bTOR, TRFT; line 2
; [ACI318-11]     : bCHEKCBEAM, bSPECIAL, PHI-B, PHI-T, PHIC1, PHI-C2, PHI-V, TLF, SLF
, TSLCB, SPWALL, BNDR-MTHD, CD, IE, FRMTYPE, 2NDGRUP, RHOS, bTOR, TRFT; line 2
; [ACI318-14]     : bCHEKCBEAM, bSPECIAL, PHI-B, PHI-T, PHIC1, PHI-C2, PHI-V, TLF, SLF
, TSLCB, SPWALL, BNDR-MTHD, CD, IE, FRMTYPE, 2NDGRUP, RHOS, bTOR, TRFT, bBC-JOINT; lin
e 2
; [ACI318M-14]    : bCHEKCBEAM, bSPECIAL, PHI-B, PHI-T, PHIC1, PHI-C2, PHI-V, TLF, SLF
, TSLCB, SPWALL, BNDR-MTHD, CD, IE, FRMTYPE, 2NDGRUP, RHOS, bTOR, TRFT, bBC-JOINT; lin
e 2
; [NSR-10]        : bCHEKCBEAM, bSPECIAL, PHI-B, PHI-T, PHIC1, PHI-C2, PHI-V, TLF, SLF
, TSLCB, SPWALL, BNDR-MTHD, CD, IE, FRMTYPE, 2NDGRUP, RHOS, bBC-JOINT; line 2
; [AIK-USD94]     : bSPECIAL, PHI-B, PHI-T, PHIC1, PHI-C2, PHI-V
 ; line 2
```

```
; [TWN-USD92]      : bSPECIAL, PHI-B, PHI-T, PHIC1, PHI-C2, PHI-V, bTOR, TRFT, SCWB
 ; line 2
; [TWN-USD100]     : bSPECIAL, PHI-B, PHI-T, PHIC1, PHI-C2, PHI-V, bTOR, TRFT, SCWB
 ; line 2
; [KCI-USD99]      : bSPECIAL, PHI-B, PHI-T, PHIC1, PHI-C2, PHI-V, TLF, SLF, TSLCB
 ; line 2
; [KCI-USD03]      : bSPECIAL, PHI-B, PHI-T, PHIC1, PHI-C2, PHI-V, TLF, SLF, TSLCB
 ; line 2
; [KCI-USD07]      : bSPECIAL, PHI-B, PHI-T, PHIC1, PHI-C2, PHI-V, TLF, SLF, TSLCB, SPW
ALL, BNDR-MTHD, CD, IE, FRMTYPE, 2NDGRUP, bTOR, TRFT; line 2
; [KCI-USD12]      : bSPECIAL, PHI-B, PHI-T, PHIC1, PHI-C2, PHI-V, TLF, SLF, TSLCB, SPW
ALL, BNDR-MTHD, CD, IE, EXPOSURE, FRMTYPE, 2NDGRUP, bTOR, TRFT; line 2
; [BS8110-97]      : GAMMA-MC, GAMMA-MS, GAMMA-MV
 ; line 2
; [EUROCODE2]      : GAMMA-CF, GAMMA-CA, GAMMA-SF, GAMMA-SA, iSCODE
 ; line 2
; [EUROCODE2:04]   : GAMMA-CF, GAMMA-CA, GAMMA-SF, GAMMA-SA, ALPHACC, iSCODE,
 ; line 2
;                    bRULE, WEAK-FACT, iDUC, GAMMA-RD-B, GAMMA-RD-C, S-GRUP
 ; line 2
;                    FRAMETYPE, AUA1, SPLCK, SOILFACTOR, TB, TC, TD, AGR, I, DAMPINGRAT
, BCJOINT, NTC2008, UF, GAMMA-RD-W, GAMMA-RD-J ; line 2
;                    STRUT-ANG, bBEHAVIOR-FACT, BEHAVIOR-FACT-VALUE, iNTC, bVCWALL, bVC
COLM, dPHIEF, bAUTOA, bAUTOC, A, B, C, bTOR    ; line 2
;                    bSHELL, dSHELLHORIZ, DSHELLVERT    ; line 2
; [EUROCODE2-2:05]: GAMMA-CF, GAMMA-CA, GAMMA-SF, GAMMA-SA, GAMMA_CL, GAMMA_SL, ALPHAC
C, iSCODE, STRUT-ANG,; line 2
;                    bSHELL, dSHELLHORIZ, DSHELLVERT    ; line 2
; [IS456:2000]     : bSPECIAL, GAMMA-C, GAMMA-S, FOS, SubRex
 ; line 2
; [GB50010-02]     : bSPECIAL, GAMMA-C, GAMMA-S, KIND, iSlabType
 ; line 2
; [GB50010-10]     : bSPECIAL, GAMMA-C, GAMMA-S, KIND, iSlabType, bTOR, TRFT
 ; line 2
; [CSA-A23.3-94]   : bSPECIAL, PHI-C, PHI-S, PHI-M
 ; line 2
; [AIK-WSD2K]      : bSPECIAL
 ; line 2
; [AIJ-WSD99]      : bSPECIAL, KIND
 ; line 2
; [AASHTO-LRFD12] : bSPECIAL, PHI-B, PHI-T, PHI-C1, PHI-C2, PHI-V, KIND
 ; line 2
; [AASHTO-LRFD02] : bSPECIAL, PHI-B, PHI-T, PHI-C1, PHI-C2, PHI-V, KIND
 ; line 2
; [AASHTO-LFD96]  : bSPECIAL, PHI-B, PHI-T, PHI-C1, PHI-C2, PHI-V
 ; line 2
; [KSCE-USD05]     : bSPECIAL, PHI-B, PHI-T, PHI-C1, PHI-C2, PHI-V
 ; line 2
; [KSCE-USD96]     : bSPECIAL, PHI-B, PHI-T, PHI-C1, PHI-C2, PHI-V
 ; line 2
; [KSCE-RAIL-USE04] : bSPECIAL, PHI-B, PHI-T, PHI-C1, PHI-C2, PHI-V
 ; line 2
; [TWN-BRG-LSD90] : bSPECIAL, PHI-B, PHI-T, PHI-C1, PHI-C2, PHI-V
 ; line 2
; [JTJ023-85]      : GAMMA-C, GAMMA-S, KIND
 ; line 2
; [CSA-S6-00]      : bSPECIAL, PHI-C, PHI-S, KIND
 ; line 2
; [CSA-S6-14]      : bSPECIAL, PHI-C, PHI-S, KIND
 ; line 2
; [IRC:21-2000]    : GAMMA-C, GAMMA-S
 ; line 2
```

```
; [SNiP 2.05.03-84*]  : nBRIDGE, bmb7mb8, mb7mb8Type, mb7, mb8, bmb9, mb9Type, mb9
 ; line 2
; [SP 35.13330.2011]  : nBRIDGE, bmb7mb8, mb7mb8Type, mb7, mb8, bmb9, mb9Type, mb9
 ; line 2
; Member Check    : bBEAM, bCOLM, bBRCE, bWALL, bSLAB, bMAT, bRBEAM, bRCOLM, bRBRCE, b
RWALL, bRSLAB, bRMAT, bSBEAM, bCANTIL, bUNDER-BM/COLM
   CODE=Eurocode2:04, 0, 0, 0, 1, 0, , , , ,
   1.5, 1.2, 1.15, 1, 0.85, 0, NO, 1.3, 0, 1.2, 1.3, , 0, 1.1, 0, 1.2, 0.15, 0.5, 2, 0
.08, 1, 5, NO, 0, YES, 0.6, 1.2, 1.2, 45, NO, 1.5, 2, NO, NO, 2.14, NO, YES, 0.7, 1.1,
 1, NO, NO, 0, 0
   YES, YES, YES, YES, YES, YES, YES, YES, YES, YES, YES, YES, YES, YES, YES, 0

*CONSTRAINT    ; Supports
; NODE_LIST, CONST(Dx,Dy,Dz,Rx,Ry,Rz), GROUP
   1 15 18 24 65to67 69 73 75 78 80 81 85 86 102 115 120to122 132 134 , 111111,
   135 139 142to175by11 144to151 169to173 177 193 376 379 396 461 463 , 111111,
   464, 111111,

*REBAR-COLUMN    ; Modify Column Rebar Data
; iSEC, iSUBSEC, HOOP, RBNAME, bUseCornerRB, CornerRBNAME, iNQRB, iNROW, DO, SRBNAME,
SPACE, iSRBN1, iSRBN2, iBHJRN, SRBNAME_C, SPACE_C, iSRBN1_C, iSRBN2_C, bSameRebar
  707,    0, TIED, P14, NO, P14, 6, 3, 0.03, P8, 0.25, 2, 2, 0, P8, 0.25, 2, 2, YES

*FRAME-RLS    ; Beam End Release
; ELEM_LIST, bVALUE, FLAG-i, Fxi, Fyi, Fzi, Mxi, Myi, Mzi        ; 1st line
;                    FLAG-j, Fxj, Fyj, Fzj, Mxj, Myj, Mzj, GROUP ; 2nd line
     9,  NO, 000001, 0, 0, 0, 0, 0, 0
             000000, 0, 0, 0, 0, 0, 0,
    10,  NO, 000001, 0, 0, 0, 0, 0, 0
             000000, 0, 0, 0, 0, 0, 0,
    12,  NO, 000001, 0, 0, 0, 0, 0, 0
             000000, 0, 0, 0, 0, 0, 0,
    18,  NO, 000001, 0, 0, 0, 0, 0, 0
             000000, 0, 0, 0, 0, 0, 0,
    24,  NO, 000001, 0, 0, 0, 0, 0, 0
             000000, 0, 0, 0, 0, 0, 0,
    26,  NO, 000001, 0, 0, 0, 0, 0, 0
             000000, 0, 0, 0, 0, 0, 0,
    27,  NO, 000001, 0, 0, 0, 0, 0, 0
             000000, 0, 0, 0, 0, 0, 0,
    30,  NO, 000001, 0, 0, 0, 0, 0, 0
             000000, 0, 0, 0, 0, 0, 0,
    33,  NO, 000001, 0, 0, 0, 0, 0, 0
             000000, 0, 0, 0, 0, 0, 0,
    34,  NO, 000001, 0, 0, 0, 0, 0, 0
             000000, 0, 0, 0, 0, 0, 0,
    39,  NO, 000001, 0, 0, 0, 0, 0, 0
             000000, 0, 0, 0, 0, 0, 0,
    40,  NO, 000001, 0, 0, 0, 0, 0, 0
             000000, 0, 0, 0, 0, 0, 0,
    41,  NO, 000001, 0, 0, 0, 0, 0, 0
             000000, 0, 0, 0, 0, 0, 0,
    42,  NO, 000001, 0, 0, 0, 0, 0, 0
             000000, 0, 0, 0, 0, 0, 0,
    43,  NO, 000001, 0, 0, 0, 0, 0, 0
             000000, 0, 0, 0, 0, 0, 0,
    44,  NO, 000001, 0, 0, 0, 0, 0, 0
             000000, 0, 0, 0, 0, 0, 0,
    45,  NO, 000001, 0, 0, 0, 0, 0, 0
             000000, 0, 0, 0, 0, 0, 0,
    46,  NO, 000001, 0, 0, 0, 0, 0, 0
             000000, 0, 0, 0, 0, 0, 0,
```

```
   47,  NO, 000001, 0, 0, 0, 0, 0, 0
            000000, 0, 0, 0, 0, 0, 0,
   48,  NO, 000001, 0, 0, 0, 0, 0, 0
            000000, 0, 0, 0, 0, 0, 0,
   49,  NO, 000001, 0, 0, 0, 0, 0, 0
            000000, 0, 0, 0, 0, 0, 0,
   50,  NO, 000001, 0, 0, 0, 0, 0, 0
            000000, 0, 0, 0, 0, 0, 0,
   51,  NO, 000001, 0, 0, 0, 0, 0, 0
            000000, 0, 0, 0, 0, 0, 0,
   52,  NO, 000001, 0, 0, 0, 0, 0, 0
            000000, 0, 0, 0, 0, 0, 0,
   53,  NO, 000001, 0, 0, 0, 0, 0, 0
            000000, 0, 0, 0, 0, 0, 0,
   54,  NO, 000001, 0, 0, 0, 0, 0, 0
            000000, 0, 0, 0, 0, 0, 0,
   55,  NO, 000011, 0, 0, 0, 0, 0, 0
            000011, 0, 0, 0, 0, 0, 0,
   56,  NO, 000001, 0, 0, 0, 0, 0, 0
            000000, 0, 0, 0, 0, 0, 0,
   57,  NO, 000001, 0, 0, 0, 0, 0, 0
            000000, 0, 0, 0, 0, 0, 0,
   58,  NO, 000001, 0, 0, 0, 0, 0, 0
            000000, 0, 0, 0, 0, 0, 0,
   59,  NO, 000001, 0, 0, 0, 0, 0, 0
            000000, 0, 0, 0, 0, 0, 0,
   60,  NO, 000001, 0, 0, 0, 0, 0, 0
            000000, 0, 0, 0, 0, 0, 0,
   61,  NO, 000001, 0, 0, 0, 0, 0, 0
            000000, 0, 0, 0, 0, 0, 0,
   62,  NO, 000001, 0, 0, 0, 0, 0, 0
            000000, 0, 0, 0, 0, 0, 0,
 2001,  NO, 000011, 0, 0, 0, 0, 0, 0
            000000, 0, 0, 0, 0, 0, 0,
 2002,  NO, 000011, 0, 0, 0, 0, 0, 0
            000000, 0, 0, 0, 0, 0, 0,
 2003,  NO, 000011, 0, 0, 0, 0, 0, 0
            000000, 0, 0, 0, 0, 0, 0,
 2006,  NO, 000011, 0, 0, 0, 0, 0, 0
            000011, 0, 0, 0, 0, 0, 0,
 2007,  NO, 000011, 0, 0, 0, 0, 0, 0
            000011, 0, 0, 0, 0, 0, 0,
 2009,  NO, 000011, 0, 0, 0, 0, 0, 0
            000011, 0, 0, 0, 0, 0, 0,
 2010,  NO, 000011, 0, 0, 0, 0, 0, 0
            000011, 0, 0, 0, 0, 0, 0,
 2013,  NO, 000011, 0, 0, 0, 0, 0, 0
            000011, 0, 0, 0, 0, 0, 0,
 2014,  NO, 000011, 0, 0, 0, 0, 0, 0
            000011, 0, 0, 0, 0, 0, 0,
 2015,  NO, 000011, 0, 0, 0, 0, 0, 0
            000011, 0, 0, 0, 0, 0, 0,
 2016,  NO, 000011, 0, 0, 0, 0, 0, 0
            000011, 0, 0, 0, 0, 0, 0,
 2017,  NO, 000011, 0, 0, 0, 0, 0, 0
            000011, 0, 0, 0, 0, 0, 0,
 2018,  NO, 000011, 0, 0, 0, 0, 0, 0
            000011, 0, 0, 0, 0, 0, 0,
 6025,  NO, 000010, 0, 0, 0, 0, 0, 0
            000010, 0, 0, 0, 0, 0, 0,
 6027,  NO, 000010, 0, 0, 0, 0, 0, 0
            000010, 0, 0, 0, 0, 0, 0,
```

```
6028,  NO, 000010, 0, 0, 0, 0, 0, 0
           000011, 0, 0, 0, 0, 0, 0,
6032,  NO, 000010, 0, 0, 0, 0, 0, 0
           000000, 0, 0, 0, 0, 0, 0,
6033,  NO, 000010, 0, 0, 0, 0, 0, 0
           000010, 0, 0, 0, 0, 0, 0,
6034,  NO, 000011, 0, 0, 0, 0, 0, 0
           000010, 0, 0, 0, 0, 0, 0,
6045,  NO, 000000, 0, 0, 0, 0, 0, 0
           000010, 0, 0, 0, 0, 0, 0,
6047,  NO, 000010, 0, 0, 0, 0, 0, 0
           000010, 0, 0, 0, 0, 0, 0,
6048,  NO, 000010, 0, 0, 0, 0, 0, 0
           000011, 0, 0, 0, 0, 0, 0,
6049,  NO, 000010, 0, 0, 0, 0, 0, 0
           000010, 0, 0, 0, 0, 0, 0,
6050,  NO, 000010, 0, 0, 0, 0, 0, 0
           000010, 0, 0, 0, 0, 0, 0,
6051,  NO, 000010, 0, 0, 0, 0, 0, 0
           000010, 0, 0, 0, 0, 0, 0,
6052,  NO, 000010, 0, 0, 0, 0, 0, 0
           000010, 0, 0, 0, 0, 0, 0,
6053,  NO, 000010, 0, 0, 0, 0, 0, 0
           000010, 0, 0, 0, 0, 0, 0,
6054,  NO, 000010, 0, 0, 0, 0, 0, 0
           000010, 0, 0, 0, 0, 0, 0,
6055,  NO, 000010, 0, 0, 0, 0, 0, 0
           000010, 0, 0, 0, 0, 0, 0,
6056,  NO, 000010, 0, 0, 0, 0, 0, 0
           000010, 0, 0, 0, 0, 0, 0,
6058,  NO, 000010, 0, 0, 0, 0, 0, 0
           000010, 0, 0, 0, 0, 0, 0,
6059,  NO, 000010, 0, 0, 0, 0, 0, 0
           000011, 0, 0, 0, 0, 0, 0,
6060,  NO, 000010, 0, 0, 0, 0, 0, 0
           000010, 0, 0, 0, 0, 0, 0,
6061,  NO, 000010, 0, 0, 0, 0, 0, 0
           000010, 0, 0, 0, 0, 0, 0,
6062,  NO, 000010, 0, 0, 0, 0, 0, 0
           000010, 0, 0, 0, 0, 0, 0,
6063,  NO, 000010, 0, 0, 0, 0, 0, 0
           000010, 0, 0, 0, 0, 0, 0,
6066,  NO, 000010, 0, 0, 0, 0, 0, 0
           000010, 0, 0, 0, 0, 0, 0,
6067,  NO, 000010, 0, 0, 0, 0, 0, 0
           000010, 0, 0, 0, 0, 0, 0,
6070,  NO, 000010, 0, 0, 0, 0, 0, 0
           000010, 0, 0, 0, 0, 0, 0,
6071,  NO, 000010, 0, 0, 0, 0, 0, 0
           000010, 0, 0, 0, 0, 0, 0,
6072,  NO, 000010, 0, 0, 0, 0, 0, 0
           000000, 0, 0, 0, 0, 0, 0,
6073,  NO, 000000, 0, 0, 0, 0, 0, 0
           000010, 0, 0, 0, 0, 0, 0,
6074,  NO, 000010, 0, 0, 0, 0, 0, 0
           000000, 0, 0, 0, 0, 0, 0,
6075,  NO, 000000, 0, 0, 0, 0, 0, 0
           000010, 0, 0, 0, 0, 0, 0,
6076,  NO, 000010, 0, 0, 0, 0, 0, 0
           000010, 0, 0, 0, 0, 0, 0,
6077,  NO, 000010, 0, 0, 0, 0, 0, 0
           000010, 0, 0, 0, 0, 0, 0,
```

```
  6078,  NO, 000010, 0, 0, 0, 0, 0, 0
             000010, 0, 0, 0, 0, 0, 0,
  6079,  NO, 000010, 0, 0, 0, 0, 0, 0
             000010, 0, 0, 0, 0, 0, 0,
  6080,  NO, 000010, 0, 0, 0, 0, 0, 0
             000010, 0, 0, 0, 0, 0, 0,
  6081,  NO, 000010, 0, 0, 0, 0, 0, 0
             000010, 0, 0, 0, 0, 0, 0,
  6082,  NO, 000010, 0, 0, 0, 0, 0, 0
             000011, 0, 0, 0, 0, 0, 0,
  6083,  NO, 000010, 0, 0, 0, 0, 0, 0
             000010, 0, 0, 0, 0, 0, 0,
  6084,  NO, 000010, 0, 0, 0, 0, 0, 0
             000011, 0, 0, 0, 0, 0, 0,
  6085,  NO, 000010, 0, 0, 0, 0, 0, 0
             000011, 0, 0, 0, 0, 0, 0,
  6086,  NO, 000010, 0, 0, 0, 0, 0, 0
             000010, 0, 0, 0, 0, 0, 0,
  6087,  NO, 000010, 0, 0, 0, 0, 0, 0
             000010, 0, 0, 0, 0, 0, 0,
  6088,  NO, 000011, 0, 0, 0, 0, 0, 0
             000010, 0, 0, 0, 0, 0, 0,
  6089,  NO, 000010, 0, 0, 0, 0, 0, 0
             000010, 0, 0, 0, 0, 0, 0,
  6090,  NO, 000010, 0, 0, 0, 0, 0, 0
             000010, 0, 0, 0, 0, 0, 0,
  6091,  NO, 000010, 0, 0, 0, 0, 0, 0
             000010, 0, 0, 0, 0, 0, 0,
  6092,  NO, 000010, 0, 0, 0, 0, 0, 0
             000010, 0, 0, 0, 0, 0, 0,
  6093,  NO, 000010, 0, 0, 0, 0, 0, 0
             000010, 0, 0, 0, 0, 0, 0,
  6094,  NO, 000010, 0, 0, 0, 0, 0, 0
             000010, 0, 0, 0, 0, 0, 0,
  6095,  NO, 000010, 0, 0, 0, 0, 0, 0
             000010, 0, 0, 0, 0, 0, 0,
  6096,  NO, 000010, 0, 0, 0, 0, 0, 0
             000010, 0, 0, 0, 0, 0, 0,
  6097,  NO, 000010, 0, 0, 0, 0, 0, 0
             000011, 0, 0, 0, 0, 0, 0,
  6109,  NO, 000010, 0, 0, 0, 0, 0, 0
             000010, 0, 0, 0, 0, 0, 0,
  6110,  NO, 000010, 0, 0, 0, 0, 0, 0
             000010, 0, 0, 0, 0, 0, 0,
  6111,  NO, 000001, 0, 0, 0, 0, 0, 0
             000000, 0, 0, 0, 0, 0, 0,
  6112,  NO, 000010, 0, 0, 0, 0, 0, 0
             000010, 0, 0, 0, 0, 0, 0,
  6113,  NO, 000001, 0, 0, 0, 0, 0, 0
             000000, 0, 0, 0, 0, 0, 0,
  6137,  NO, 000000, 0, 0, 0, 0, 0, 0
             000011, 0, 0, 0, 0, 0, 0,
  6224,  NO, 000000, 0, 0, 0, 0, 0, 0
             000011, 0, 0, 0, 0, 0, 0,
  6232,  NO, 000000, 0, 0, 0, 0, 0, 0
             000011, 0, 0, 0, 0, 0, 0,
  6295,  NO, 000011, 0, 0, 0, 0, 0, 0
             000011, 0, 0, 0, 0, 0, 0,

*LOADTOMASS    ; Load to Mass
; DIR, bNODAL, bBEAM, bFLOOR, bPRES, GRAV
; LCNAME1, FACTOR1, LCNAME2, FACTOR2, ...   ; from line 1
```

```
   XY, YES, YES, YES, YES, 9.806
   PP, 1, G1+G2 copertura A, 3.7, Q sottotetto, 0.3, sporto gronda, 2, travi, 3
   parapetto, 1.5, muro, 4.6, G1+G2 copertura B, 1.5

*USE-STLD, PP

*SELFWEIGHT    ; Self Weight
; X, Y, Z, GROUP
0, 0, -1,

; End of data for load case [PP] -------------------------

*USE-STLD, G1+G2 copertura A

*BEAMLOAD    ; Element Beam Loads
; ELEM_LIST, CMD, TYPE, DIR, bPROJ, [ECCEN], [VALUE], GROUP
; ELEM_LIST, CMD, TYPE, TYPE, DIR, VX, VY, VZ, bPROJ, [ECCEN], [VALUE], GROUP
; [VALUE]       : D1, P1, D2, P2, D3, P3, D4, P4
; [ECCEN]       : bECCEN, ECCDIR, I-END, J-END, bJ-END
; [ADDITIONAL]  : bADDITIONAL, ADDITIONAL_I-END, ADDITIONAL_J-END, bADDITIONAL_J-END
  6025, BEAM   , UNILOAD, GZ, NO , NO, aDir[1], , , , 0.648496, -3.21, 1, -3.21, 0, 0,
 0, 0, , NO, 0, 0, NO,
  6025, BEAM   , UNILOAD, GZ, NO , NO, aDir[1], , , , 0, -3.21, 0.648496, -3.21, 0, 0,
 0, 0, , NO, 0, 0, NO,
  6027, BEAM   , UNILOAD, GZ, NO , NO, aDir[1], , , , 0, -3.21, 1, -3.21, 0, 0, 0, 0,
, NO, 0, 0, NO,
  6028, BEAM   , UNILOAD, GZ, NO , NO, aDir[1], , , , 0, -3.21, 1, -3.21, 0, 0, 0, 0,
, NO, 0, 0, NO,
  6032, BEAM   , UNILOAD, GZ, NO , NO, aDir[1], , , , 0, -1.8, 1, -1.8, 0, 0, 0, 0, ,
NO, 0, 0, NO,
  6036, BEAM   , UNILOAD, GZ, NO , NO, aDir[1], , , , 0, -1.8, 1, -1.8, 0, 0, 0, 0, ,
NO, 0, 0, NO,
  6050, BEAM   , UNILOAD, GZ, NO , NO, aDir[1], , , , 0, -1.64, 1, -1.64, 0, 0, 0, 0,
, NO, 0, 0, NO,
  6050, BEAM   , UNILOAD, GZ, NO , NO, aDir[1], , , , 0, -3.21, 1, -3.21, 0, 0, 0, 0,
, NO, 0, 0, NO,
  6051, BEAM   , UNILOAD, GZ, NO , NO, aDir[1], , , , 0, -1.64, 1, -1.64, 0, 0, 0, 0,
, NO, 0, 0, NO,
  6051, BEAM   , UNILOAD, GZ, NO , NO, aDir[1], , , , 0, -3.21, 1, -3.21, 0, 0, 0, 0,
, NO, 0, 0, NO,
  6052, BEAM   , UNILOAD, GZ, NO , NO, aDir[1], , , , 0, -1.64, 1, -1.64, 0, 0, 0, 0,
, NO, 0, 0, NO,
  6052, BEAM   , UNILOAD, GZ, NO , NO, aDir[1], , , , 0, -3.21, 1, -3.21, 0, 0, 0, 0,
, NO, 0, 0, NO,
  6053, BEAM   , UNILOAD, GZ, NO , NO, aDir[1], , , , 0, -1.64, 1, -1.64, 0, 0, 0, 0,
, NO, 0, 0, NO,
  6053, BEAM   , UNILOAD, GZ, NO , NO, aDir[1], , , , 0, -3.21, 1, -3.21, 0, 0, 0, 0,
, NO, 0, 0, NO,
  6054, BEAM   , UNILOAD, GZ, NO , NO, aDir[1], , , , 0, -1.64, 1, -1.64, 0, 0, 0, 0,
, NO, 0, 0, NO,
  6054, BEAM   , UNILOAD, GZ, NO , NO, aDir[1], , , , 0, -3.21, 1, -3.21, 0, 0, 0, 0,
, NO, 0, 0, NO,
  6058, BEAM   , UNILOAD, GZ, NO , NO, aDir[1], , , , 0, -1.64, 1, -1.64, 0, 0, 0, 0,
, NO, 0, 0, NO,
  6059, BEAM   , UNILOAD, GZ, NO , NO, aDir[1], , , , 0, -1.64, 1, -1.64, 0, 0, 0, 0,
, NO, 0, 0, NO,
  6060, BEAM   , UNILOAD, GZ, NO , NO, aDir[1], , , , 0, -1.64, 1, -1.64, 0, 0, 0, 0,
, NO, 0, 0, NO,
  6061, BEAM   , UNILOAD, GZ, NO , NO, aDir[1], , , , 0, -1.64, 1, -1.64, 0, 0, 0, 0,
, NO, 0, 0, NO,
  6062, BEAM   , UNILOAD, GZ, NO , NO, aDir[1], , , , 0, -3.225, 1, -3.225, 0, 0, 0, 0
, , NO, 0, 0, NO,
```

```
  6063, BEAM   , UNILOAD, GZ, NO , NO, aDir[1], , , , 0, -3.175, 1, -3.175, 0, 0, 0, 0
, , NO, 0, 0, NO,
  6066, BEAM   , UNILOAD, GZ, NO , NO, aDir[1], , , , 0, -3.175, 1, -3.175, 0, 0, 0, 0
, , NO, 0, 0, NO,
  6066, BEAM   , UNILOAD, GZ, NO , NO, aDir[1], , , , 0, -3.225, 1, -3.225, 0, 0, 0, 0
, , NO, 0, 0, NO,
  6067, BEAM   , UNILOAD, GZ, NO , NO, aDir[1], , , , 0, -3.225, 1, -3.225, 0, 0, 0, 0
, , NO, 0, 0, NO,
  6070, BEAM   , UNILOAD, GZ, NO , NO, aDir[1], , , , 0, -3.175, 1, -3.175, 0, 0, 0, 0
, , NO, 0, 0, NO,
  6071, BEAM   , UNILOAD, GZ, NO , NO, aDir[1], , , , 0, -1.175, 1, -1.175, 0, 0, 0, 0
, , NO, 0, 0, NO,
  6071, BEAM   , UNILOAD, GZ, NO , NO, aDir[1], , , , 0, -2.68, 1, -2.68, 0, 0, 0, 0,
, NO, 0, 0, NO,
  6072, BEAM   , UNILOAD, GZ, NO , NO, aDir[1], , , , 0, -1.175, 1, -1.175, 0, 0, 0, 0
, , NO, 0, 0, NO,
  6072, BEAM   , UNILOAD, GZ, NO , NO, aDir[1], , , , 0, -2.68, 1, -2.68, 0, 0, 0, 0,
, NO, 0, 0, NO,
  6073, BEAM   , UNILOAD, GZ, NO , NO, aDir[1], , , , 0, -2.68, 1, -2.68, 0, 0, 0, 0,
, NO, 0, 0, NO,
  6074, BEAM   , UNILOAD, GZ, NO , NO, aDir[1], , , , 0, -2.68, 1, -2.68, 0, 0, 0, 0,
, NO, 0, 0, NO,
  6075, BEAM   , UNILOAD, GZ, NO , NO, aDir[1], , , , 0, -2.68, 1, -2.68, 0, 0, 0, 0,
, NO, 0, 0, NO,
  6076, BEAM   , UNILOAD, GZ, NO , NO, aDir[1], , , , 0, -2.68, 1, -2.68, 0, 0, 0, 0,
, NO, 0, 0, NO,
  6077, BEAM   , UNILOAD, GZ, NO , NO, aDir[1], , , , 0, -2.68, 1, -2.68, 0, 0, 0, 0,
, NO, 0, 0, NO,
  6078, BEAM   , UNILOAD, GZ, NO , NO, aDir[1], , , , 0, -2.68, 1, -2.68, 0, 0, 0, 0,
, NO, 0, 0, NO,
  6079, BEAM   , UNILOAD, GZ, NO , NO, aDir[1], , , , 0, -3.225, 1, -3.225, 0, 0, 0, 0
, , NO, 0, 0, NO,
  6079, BEAM   , UNILOAD, GZ, NO , NO, aDir[1], , , , 0, -3.175, 1, -3.175, 0, 0, 0, 0
, , NO, 0, 0, NO,
  6081, BEAM   , UNILOAD, GZ, NO , NO, aDir[1], , , , 0, -3.225, 1, -3.225, 0, 0, 0, 0
, , NO, 0, 0, NO,
  6082, BEAM   , UNILOAD, GZ, NO , NO, aDir[1], , , , 0, -3.175, 1, -3.175, 0, 0, 0, 0
, , NO, 0, 0, NO,
  6086, BEAM   , UNILOAD, GZ, NO , NO, aDir[1], , , , 0, -3.225, 1, -3.225, 0, 0, 0, 0
, , NO, 0, 0, NO,
  6087, BEAM   , UNILOAD, GZ, NO , NO, aDir[1], , , , 0, -3.225, 1, -3.225, 0, 0, 0, 0
, , NO, 0, 0, NO,
  6088, BEAM   , UNILOAD, GZ, NO , NO, aDir[1], , , , 0, -2.68, 1, -2.68, 0, 0, 0, 0,
, NO, 0, 0, NO,
  6089, BEAM   , UNILOAD, GZ, NO , NO, aDir[1], , , , 0, -2.68, 1, -2.68, 0, 0, 0, 0,
, NO, 0, 0, NO,
  6090, BEAM   , UNILOAD, GZ, NO , NO, aDir[1], , , , 0, -2.68, 1, -2.68, 0, 0, 0, 0,
, NO, 0, 0, NO,
  6091, BEAM   , UNILOAD, GZ, NO , NO, aDir[1], , , , 0, -2.68, 1, -2.68, 0, 0, 0, 0,
, NO, 0, 0, NO,
  6092, BEAM   , UNILOAD, GZ, NO , NO, aDir[1], , , , 0, -2.68, 1, -2.68, 0, 0, 0, 0,
, NO, 0, 0, NO,
  6093, BEAM   , UNILOAD, GZ, NO , NO, aDir[1], , , , 0, -2.68, 1, -2.68, 0, 0, 0, 0,
, NO, 0, 0, NO,
  6094, BEAM   , UNILOAD, GZ, NO , NO, aDir[1], , , , 0, -2.68, 1, -2.68, 0, 0, 0, 0,
, NO, 0, 0, NO,
  6109, BEAM   , UNILOAD, GZ, NO , NO, aDir[1], , , , 0, -3.21, 1, -3.21, 0, 0, 0, 0,
, NO, 0, 0, NO,
  6110, BEAM   , UNILOAD, GZ, NO , NO, aDir[1], , , , 0, -3.225, 1, -3.225, 0, 0, 0, 0
, , NO, 0, 0, NO,
  6112, BEAM   , UNILOAD, GZ, NO , NO, aDir[1], , , , 0, -3.225, 1, -3.225, 0, 0, 0, 0
, , NO, 0, 0, NO,
```

```
  6112, BEAM   , UNILOAD, GZ, NO , NO, aDir[1], , , , 0, -3.175, 1, -3.175, 0, 0, 0, 0
, , NO, 0, 0, NO,

; End of data for load case [G1+G2 copertura A] -------------------------

*USE-STLD, G1+G2 copertura B

*BEAMLOAD    ; Element Beam Loads
; ELEM_LIST, CMD, TYPE, DIR, bPROJ, [ECCEN], [VALUE], GROUP
; ELEM_LIST, CMD, TYPE, TYPE, DIR, VX, VY, VZ, bPROJ, [ECCEN], [VALUE], GROUP
; [VALUE]       : D1, P1, D2, P2, D3, P3, D4, P4
; [ECCEN]       : bECCEN, ECCDIR, I-END, J-END, bJ-END
; [ADDITIONAL]  : bADDITIONAL, ADDITIONAL_I-END, ADDITIONAL_J-END, bADDITIONAL_J-END
  6073, BEAM   , UNILOAD, GZ, NO , NO, aDir[1], , , , 0, -5.125, 1, -5.125, 0, 0, 0, 0
, , NO, 0, 0, NO,
  6074, BEAM   , UNILOAD, GZ, NO , NO, aDir[1], , , , 0, -5.125, 1, -5.125, 0, 0, 0, 0
, , NO, 0, 0, NO,
  6075, BEAM   , UNILOAD, GZ, NO , NO, aDir[1], , , , 0, -5.125, 1, -5.125, 0, 0, 0, 0
, , NO, 0, 0, NO,
  6076, BEAM   , UNILOAD, GZ, NO , NO, aDir[1], , , , 0, -5.125, 1, -5.125, 0, 0, 0, 0
, , NO, 0, 0, NO,
  6077, BEAM   , UNILOAD, GZ, NO , NO, aDir[1], , , , 0, -5.125, 1, -5.125, 0, 0, 0, 0
, , NO, 0, 0, NO,
  6078, BEAM   , UNILOAD, GZ, NO , NO, aDir[1], , , , 0, -5.125, 1, -5.125, 0, 0, 0, 0
, , NO, 0, 0, NO,

; End of data for load case [G1+G2 copertura B] -------------------------

*USE-STLD, sporto gronda

*BEAMLOAD    ; Element Beam Loads
; ELEM_LIST, CMD, TYPE, DIR, bPROJ, [ECCEN], [VALUE], GROUP
; ELEM_LIST, CMD, TYPE, TYPE, DIR, VX, VY, VZ, bPROJ, [ECCEN], [VALUE], GROUP
; [VALUE]       : D1, P1, D2, P2, D3, P3, D4, P4
; [ECCEN]       : bECCEN, ECCDIR, I-END, J-END, bJ-END
; [ADDITIONAL]  : bADDITIONAL, ADDITIONAL_I-END, ADDITIONAL_J-END, bADDITIONAL_J-END
  6025, BEAM   , UNILOAD, GZ, NO , NO, aDir[1], , , , 0, -1, 0.648496, -1, 0, 0, 0, 0,
 , NO, 0, 0, NO,
  6025, BEAM   , UNILOAD, GZ, NO , NO, aDir[1], , , , 0.648496, -1, 1, -1, 0, 0, 0, 0,
 , NO, 0, 0, NO,
  6027, BEAM   , UNILOAD, GZ, NO , NO, aDir[1], , , , 0, -1, 1, -1, 0, 0, 0, 0, , NO,
0, 0, NO,
  6028, BEAM   , UNILOAD, GZ, NO , NO, aDir[1], , , , 0, -1, 1, -1, 0, 0, 0, 0, , NO,
0, 0, NO,
  6063, BEAM   , UNILOAD, GZ, NO , NO, aDir[1], , , , 0, -1, 1, -1, 0, 0, 0, 0, , NO,
0, 0, NO,
  6070, BEAM   , UNILOAD, GZ, NO , NO, aDir[1], , , , 0, -1, 1, -1, 0, 0, 0, 0, , NO,
0, 0, NO,
  6082, BEAM   , UNILOAD, GZ, NO , NO, aDir[1], , , , 0, -1, 1, -1, 0, 0, 0, 0, , NO,
0, 0, NO,
  6088, BEAM   , UNILOAD, GZ, NO , NO, aDir[1], , , , 0, -1, 1, -1, 0, 0, 0, 0, , NO,
0, 0, NO,
  6089, BEAM   , UNILOAD, GZ, NO , NO, aDir[1], , , , 0, -1, 1, -1, 0, 0, 0, 0, , NO,
0, 0, NO,
  6090, BEAM   , UNILOAD, GZ, NO , NO, aDir[1], , , , 0, -1, 1, -1, 0, 0, 0, 0, , NO,
0, 0, NO,
  6091, BEAM   , UNILOAD, GZ, NO , NO, aDir[1], , , , 0, -1, 1, -1, 0, 0, 0, 0, , NO,
0, 0, NO,
  6092, BEAM   , UNILOAD, GZ, NO , NO, aDir[1], , , , 0, -1, 1, -1, 0, 0, 0, 0, , NO,
0, 0, NO,
  6093, BEAM   , UNILOAD, GZ, NO , NO, aDir[1], , , , 0, -1, 1, -1, 0, 0, 0, 0, , NO,
0, 0, NO,
```

```
  6094, BEAM   , UNILOAD, GZ, NO , NO, aDir[1], , , , 0, -1, 1, -1, 0, 0, 0, 0, , NO,
0, 0, NO,
  6095, BEAM   , UNILOAD, GZ, NO , NO, aDir[1], , , , 0, -1, 1, -1, 0, 0, 0, 0, , NO,
0, 0, NO,
  6096, BEAM   , UNILOAD, GZ, NO , NO, aDir[1], , , , 0, -1, 1, -1, 0, 0, 0, 0, , NO,
0, 0, NO,
  6097, BEAM   , UNILOAD, GZ, NO , NO, aDir[1], , , , 0, -1, 1, -1, 0, 0, 0, 0, , NO,
0, 0, NO,
  6109, BEAM   , UNILOAD, GZ, NO , NO, aDir[1], , , , 0, -1, 1, -1, 0, 0, 0, 0, , NO,
0, 0, NO,

; End of data for load case [sporto gronda] -------------------------

*USE-STLD, Q neve

*BEAMLOAD    ; Element Beam Loads
; ELEM_LIST, CMD, TYPE, DIR, bPROJ, [ECCEN], [VALUE], GROUP
; ELEM_LIST, CMD, TYPE, TYPE, DIR, VX, VY, VZ, bPROJ, [ECCEN], [VALUE], GROUP
; [VALUE]       : D1, P1, D2, P2, D3, P3, D4, P4
; [ECCEN]       : bECCEN, ECCDIR, I-END, J-END, bJ-END
; [ADDITIONAL]  : bADDITIONAL, ADDITIONAL_I-END, ADDITIONAL_J-END, bADDITIONAL_J-END
  6025, BEAM   , UNILOAD, GZ, NO , NO, aDir[1], , , , 0.648496, -3.21, 1, -3.21, 0, 0,
 0, 0, , NO, 0, 0, NO,
  6025, BEAM   , UNILOAD, GZ, NO , NO, aDir[1], , , , 0, -3.21, 0.648496, -3.21, 0, 0,
 0, 0, , NO, 0, 0, NO,
  6027, BEAM   , UNILOAD, GZ, NO , NO, aDir[1], , , , 0, -3.21, 1, -3.21, 0, 0, 0, 0,
, NO, 0, 0, NO,
  6028, BEAM   , UNILOAD, GZ, NO , NO, aDir[1], , , , 0, -3.21, 1, -3.21, 0, 0, 0, 0,
, NO, 0, 0, NO,
  6032, BEAM   , UNILOAD, GZ, NO , NO, aDir[1], , , , 0, -1.8, 1, -1.8, 0, 0, 0, 0, ,
NO, 0, 0, NO,
  6036, BEAM   , UNILOAD, GZ, NO , NO, aDir[1], , , , 0, -1.8, 1, -1.8, 0, 0, 0, 0, ,
NO, 0, 0, NO,
  6050, BEAM   , UNILOAD, GZ, NO , NO, aDir[1], , , , 0, -1.64, 1, -1.64, 0, 0, 0, 0,
, NO, 0, 0, NO,
  6050, BEAM   , UNILOAD, GZ, NO , NO, aDir[1], , , , 0, -3.21, 1, -3.21, 0, 0, 0, 0,
, NO, 0, 0, NO,
  6051, BEAM   , UNILOAD, GZ, NO , NO, aDir[1], , , , 0, -1.64, 1, -1.64, 0, 0, 0, 0,
, NO, 0, 0, NO,
  6051, BEAM   , UNILOAD, GZ, NO , NO, aDir[1], , , , 0, -3.21, 1, -3.21, 0, 0, 0, 0,
, NO, 0, 0, NO,
  6052, BEAM   , UNILOAD, GZ, NO , NO, aDir[1], , , , 0, -1.64, 1, -1.64, 0, 0, 0, 0,
, NO, 0, 0, NO,
  6052, BEAM   , UNILOAD, GZ, NO , NO, aDir[1], , , , 0, -3.21, 1, -3.21, 0, 0, 0, 0,
, NO, 0, 0, NO,
  6053, BEAM   , UNILOAD, GZ, NO , NO, aDir[1], , , , 0, -3.21, 1, -3.21, 0, 0, 0, 0,
, NO, 0, 0, NO,
  6053, BEAM   , UNILOAD, GZ, NO , NO, aDir[1], , , , 0, -1.64, 1, -1.64, 0, 0, 0, 0,
, NO, 0, 0, NO,
  6054, BEAM   , UNILOAD, GZ, NO , NO, aDir[1], , , , 0, -1.64, 1, -1.64, 0, 0, 0, 0,
, NO, 0, 0, NO,
  6054, BEAM   , UNILOAD, GZ, NO , NO, aDir[1], , , , 0, -3.21, 1, -3.21, 0, 0, 0, 0,
, NO, 0, 0, NO,
  6058, BEAM   , UNILOAD, GZ, NO , NO, aDir[1], , , , 0, -1.64, 1, -1.64, 0, 0, 0, 0,
, NO, 0, 0, NO,
  6059, BEAM   , UNILOAD, GZ, NO , NO, aDir[1], , , , 0, -1.64, 1, -1.64, 0, 0, 0, 0,
, NO, 0, 0, NO,
  6060, BEAM   , UNILOAD, GZ, NO , NO, aDir[1], , , , 0, -1.64, 1, -1.64, 0, 0, 0, 0,
, NO, 0, 0, NO,
  6061, BEAM   , UNILOAD, GZ, NO , NO, aDir[1], , , , 0, -1.64, 1, -1.64, 0, 0, 0, 0,
, NO, 0, 0, NO,
  6062, BEAM   , UNILOAD, GZ, NO , NO, aDir[1], , , , 0, -3.225, 1, -3.225, 0, 0, 0, 0
```

```
, , NO, 0, 0, NO,
  6063, BEAM   , UNILOAD, GZ, NO , NO, aDir[1], , , , 0, -3.175, 1, -3.175, 0, 0, 0, 0
, , NO, 0, 0, NO,
  6066, BEAM   , UNILOAD, GZ, NO , NO, aDir[1], , , , 0, -3.175, 1, -3.175, 0, 0, 0, 0
, , NO, 0, 0, NO,
  6066, BEAM   , UNILOAD, GZ, NO , NO, aDir[1], , , , 0, -3.225, 1, -3.225, 0, 0, 0, 0
, , NO, 0, 0, NO,
  6067, BEAM   , UNILOAD, GZ, NO , NO, aDir[1], , , , 0, -3.225, 1, -3.225, 0, 0, 0, 0
, , NO, 0, 0, NO,
  6070, BEAM   , UNILOAD, GZ, NO , NO, aDir[1], , , , 0, -3.175, 1, -3.175, 0, 0, 0, 0
, , NO, 0, 0, NO,
  6071, BEAM   , UNILOAD, GZ, NO , NO, aDir[1], , , , 0, -1.175, 1, -1.175, 0, 0, 0, 0
, , NO, 0, 0, NO,
  6071, BEAM   , UNILOAD, GZ, NO , NO, aDir[1], , , , 0, -2.68, 1, -2.68, 0, 0, 0, 0,
, NO, 0, 0, NO,
  6072, BEAM   , UNILOAD, GZ, NO , NO, aDir[1], , , , 0, -1.175, 1, -1.175, 0, 0, 0, 0
, , NO, 0, 0, NO,
  6072, BEAM   , UNILOAD, GZ, NO , NO, aDir[1], , , , 0, -2.68, 1, -2.68, 0, 0, 0, 0,
, NO, 0, 0, NO,
  6073, BEAM   , UNILOAD, GZ, NO , NO, aDir[1], , , , 0, -2.68, 1, -2.68, 0, 0, 0, 0,
, NO, 0, 0, NO,
  6073, BEAM   , UNILOAD, GZ, NO , NO, aDir[1], , , , 0, -5.125, 1, -5.125, 0, 0, 0, 0
, , NO, 0, 0, NO,
  6074, BEAM   , UNILOAD, GZ, NO , NO, aDir[1], , , , 0, -2.68, 1, -2.68, 0, 0, 0, 0,
, NO, 0, 0, NO,
  6074, BEAM   , UNILOAD, GZ, NO , NO, aDir[1], , , , 0, -5.125, 1, -5.125, 0, 0, 0, 0
, , NO, 0, 0, NO,
  6075, BEAM   , UNILOAD, GZ, NO , NO, aDir[1], , , , 0, -2.68, 1, -2.68, 0, 0, 0, 0,
, NO, 0, 0, NO,
  6075, BEAM   , UNILOAD, GZ, NO , NO, aDir[1], , , , 0, -5.125, 1, -5.125, 0, 0, 0, 0
, , NO, 0, 0, NO,
  6076, BEAM   , UNILOAD, GZ, NO , NO, aDir[1], , , , 0, -5.125, 1, -5.125, 0, 0, 0, 0
, , NO, 0, 0, NO,
  6076, BEAM   , UNILOAD, GZ, NO , NO, aDir[1], , , , 0, -2.68, 1, -2.68, 0, 0, 0, 0,
, NO, 0, 0, NO,
  6077, BEAM   , UNILOAD, GZ, NO , NO, aDir[1], , , , 0, -2.68, 1, -2.68, 0, 0, 0, 0,
, NO, 0, 0, NO,
  6077, BEAM   , UNILOAD, GZ, NO , NO, aDir[1], , , , 0, -5.125, 1, -5.125, 0, 0, 0, 0
, , NO, 0, 0, NO,
  6078, BEAM   , UNILOAD, GZ, NO , NO, aDir[1], , , , 0, -2.68, 1, -2.68, 0, 0, 0, 0,
, NO, 0, 0, NO,
  6078, BEAM   , UNILOAD, GZ, NO , NO, aDir[1], , , , 0, -5.125, 1, -5.125, 0, 0, 0, 0
, , NO, 0, 0, NO,
  6079, BEAM   , UNILOAD, GZ, NO , NO, aDir[1], , , , 0, -3.225, 1, -3.225, 0, 0, 0, 0
, , NO, 0, 0, NO,
  6079, BEAM   , UNILOAD, GZ, NO , NO, aDir[1], , , , 0, -3.175, 1, -3.175, 0, 0, 0, 0
, , NO, 0, 0, NO,
  6081, BEAM   , UNILOAD, GZ, NO , NO, aDir[1], , , , 0, -3.225, 1, -3.225, 0, 0, 0, 0
, , NO, 0, 0, NO,
  6082, BEAM   , UNILOAD, GZ, NO , NO, aDir[1], , , , 0, -3.175, 1, -3.175, 0, 0, 0, 0
, , NO, 0, 0, NO,
  6086, BEAM   , UNILOAD, GZ, NO , NO, aDir[1], , , , 0, -3.225, 1, -3.225, 0, 0, 0, 0
, , NO, 0, 0, NO,
  6087, BEAM   , UNILOAD, GZ, NO , NO, aDir[1], , , , 0, -3.225, 1, -3.225, 0, 0, 0, 0
, , NO, 0, 0, NO,
  6088, BEAM   , UNILOAD, GZ, NO , NO, aDir[1], , , , 0, -2.68, 1, -2.68, 0, 0, 0, 0,
, NO, 0, 0, NO,
  6089, BEAM   , UNILOAD, GZ, NO , NO, aDir[1], , , , 0, -2.68, 1, -2.68, 0, 0, 0, 0,
, NO, 0, 0, NO,
  6090, BEAM   , UNILOAD, GZ, NO , NO, aDir[1], , , , 0, -2.68, 1, -2.68, 0, 0, 0, 0,
, NO, 0, 0, NO,
  6091, BEAM   , UNILOAD, GZ, NO , NO, aDir[1], , , , 0, -2.68, 1, -2.68, 0, 0, 0, 0,
```

```
, NO, 0, 0, NO,
  6092, BEAM   , UNILOAD, GZ, NO , NO, aDir[1], , , , 0, -2.68, 1, -2.68, 0, 0, 0, 0,
, NO, 0, 0, NO,
  6093, BEAM   , UNILOAD, GZ, NO , NO, aDir[1], , , , 0, -2.68, 1, -2.68, 0, 0, 0, 0,
, NO, 0, 0, NO,
  6094, BEAM   , UNILOAD, GZ, NO , NO, aDir[1], , , , 0, -2.68, 1, -2.68, 0, 0, 0, 0,
, NO, 0, 0, NO,
  6109, BEAM   , UNILOAD, GZ, NO , NO, aDir[1], , , , 0, -3.21, 1, -3.21, 0, 0, 0, 0,
, NO, 0, 0, NO,
  6110, BEAM   , UNILOAD, GZ, NO , NO, aDir[1], , , , 0, -3.225, 1, -3.225, 0, 0, 0, 0
, , NO, 0, 0, NO,
  6112, BEAM   , UNILOAD, GZ, NO , NO, aDir[1], , , , 0, -3.225, 1, -3.225, 0, 0, 0, 0
, , NO, 0, 0, NO,
  6112, BEAM   , UNILOAD, GZ, NO , NO, aDir[1], , , , 0, -3.175, 1, -3.175, 0, 0, 0, 0
, , NO, 0, 0, NO,

; End of data for load case [Q neve] -------------------------

*USE-STLD, SISMA X

*SEIS    ; Static Seismic Loads
; CODE=CODE, SFX, SFY, ECCX, ECCY, bACC, bINH, DESC, SFZR
   ; line 1
; [KS1992]   : SPT, EA, IF, PAX, PAY, PCX, PCY, RMFX, RMFY
   ; line 2
; [UBC1991]  : SPT, ZF, IF, PAX, PAY, PCX, PCY, NCX, NCY
   ; line 2
; [UBC1997]  : SPT, ZF, SST, CD, IF, PX, PY, NCX, NCY, PAX, PAY
   ; line 2
; [ATC306]   : SPC, EPV, PAX, PAY, PCX, PCY, RMFX, RMFY
   ; line 2
; [KS2000]   : SPT, EA, IF, PAX, PAY, PCX, PCY, RMFX, RMFY
   ; line 2
; [JIS]      : SPT, EA, SF, PAX, PAY, PCX, PCY, RMFX, RMFY, [JIS-AI]
   ; line 2
; [IBC2000]  : SDC, SC, MS, M1, IF, PX, PY, PCX, PCY, RMFX, RMFY
   ; line 2
; [EURO1996] : S, QO, KD, KR, KW, ALPHA, FPX, FPY
   ; line 2
; [CH2002]   : NSC, SFI, SC, ST, DR, EQ, bMM, FPX, FPY
   ; line 2
; [CHSH2003] : SFI, SC, ST, DR, EQ, bMM, FPX, FPY
   ; line 2
; [NBC1995]  : ZVR, AZ, VZ, IF, FF, PAX, PAY, PCX, PCY, FMFX, FMFY
   ; line 2
; [IS2002]   : SZ, ST, IF, DAMP, FPX, FPY, RFX, RFY
   ; line 2
; [TAIWAN99] : SZ, ST, IF, SMF, PM, PAX, PAY, PApX, PApY, PFX, PFY, RMFX, RMFY
   ; line 2
; [KBC2005]  : RA, SZ(Sds), SC(Sd1), SUG, bCPR, IF, iP, PAX, PAY, PApX, PApY, RMFX, RM
FY ; line 2
; [TAIWAN06] : SZ, Sds, Sd1, Sms, Sm1,Nda, Ndv,Nma, Nmv, ST, Fda, Fdv, Fma, Fmv, SubZ,

;  Sds_t, Sms_t, Td0_t, Tm0_t, IF, ALPHA, PM, PAX, PAY, PApX, PApY, PFX, PFY, RMFX, RM
FY ; line 2
; [EURO2004] : iGR, iSPE, S, TB, TC, TD, AG, Q, LBF, IF, FPX, FPY,
   ; line 2
; [JIS-AI]   : bUSER, STORY1, XDIR1, YDIR1, STORY2, XDIR2, YDIR2, ...
; [KBC2009]  : SZ, ZF, SC, CU, FA, Fv, SDS, SD1, SUG, IF, ip, PAX, PAY, PApX, PApY, RM
FX, RMFY
; [TAIWAN11] : SZ, Sds, Sd1, Sms, Sm1,Nda, Ndv,Nma, Nmv, ST, Fda, Fdv, Fma, Fmv, SubZ,
```

```
;  Sds_t, Sms_t, Td0_t, Tm0_t, IF, ALPHA, PM, PAX, PAY, PApX, PApY, PFX, PFY, RMFX, RM
FY ; line 2
; [NTC2008]  : iGR, iSPE, S, TB, TC, TD, AG, Q, AMPF, Tc*, FPX, FPY,
   ; line 2
; [CH2010]   : NSC, SFI, SC, ST, DR, EQ, bMM, FPX, FPY
   ; line 2
; [IBC2009]  : SC, Ss, S1, Fa, Fv, Sds, Sd1, Cu, TL, OC, IF, iP, PAX, PAY, PApX, PApY,
 RMFX, RMFY ; line 2
; [IBC2012]  : SC, Ss, S1, Fa, Fv, Sds, Sd1, Cu, TL, RC, IF, iP, PAX, PAY, PApX, PApY,
 RMFX, RMFY ; line 2
; [NTC2012]  : iGR, iSPE, S, TB, TC, TD, AG, Q, AMPF, Tc*, FPX, FPY,
   ; line 2
; [P100_2013]: iSPE, TB, TC, TD, AG, Q, IF, FPX, FPY
   ; line 2
; [IS1893_2016]: Zone, Soil, IF, Damp, Peri.X, Peri.Y, RsRdFact_X, RsRdFact_Y
   ; line 2
; [NTC2018]  : iGR, iSPE, S, TB, TC, TD, AG, Q, AMPF, Tc*, FPX, FPY,
   ; line 2
; SSTORY1, ESTORY1, ADDX1, ADDY1, ...
   ; from line 3
   CODE=NTC2018, 1, 0, POS, POS, NO, NO, , 0
        2, 4, 1.427, 0.147, 0.44, 2.336, 0.184, 1, 2.47, 0.273, 0, 0

; End of data for load case [SISMA X] -------------------------

*USE-STLD, SISMA Y

*SEIS    ; Static Seismic Loads
; CODE=CODE, SFX, SFY, ECCX, ECCY, bACC, bINH, DESC, SFZR
   ; line 1
; [KS1992]   : SPT, EA, IF, PAX, PAY, PCX, PCY, RMFX, RMFY
   ; line 2
; [UBC1991]  : SPT, ZF, IF, PAX, PAY, PCX, PCY, NCX, NCY
   ; line 2
; [UBC1997]  : SPT, ZF, SST, CD, IF, PX, PY, NCX, NCY, PAX, PAY
   ; line 2
; [ATC306]   : SPC, EPV, PAX, PAY, PCX, PCY, RMFX, RMFY
   ; line 2
; [KS2000]   : SPT, EA, IF, PAX, PAY, PCX, PCY, RMFX, RMFY
   ; line 2
; [JIS]      : SPT, EA, SF, PAX, PAY, PCX, PCY, RMFX, RMFY, [JIS-AI]
   ; line 2
; [IBC2000]  : SDC, SC, MS, M1, IF, PX, PY, PCX, PCY, RMFX, RMFY
   ; line 2
; [EURO1996] : S, QO, KD, KR, KW, ALPHA, FPX, FPY
   ; line 2
; [CH2002]   : NSC, SFI, SC, ST, DR, EQ, bMM, FPX, FPY
   ; line 2
; [CHSH2003] : SFI, SC, ST, DR, EQ, bMM, FPX, FPY
   ; line 2
; [NBC1995]  : ZVR, AZ, VZ, IF, FF, PAX, PAY, PCX, PCY, FMFX, FMFY
   ; line 2
; [IS2002]   : SZ, ST, IF, DAMP, FPX, FPY, RFX, RFY
   ; line 2
; [TAIWAN99] : SZ, ST, IF, SMF, PM, PAX, PAY, PApX, PApY, PFX, PFY, RMFX, RMFY
   ; line 2
; [KBC2005]  : RA, SZ(Sds), SC(Sd1), SUG, bCPR, IF, iP, PAX, PAY, PApX, PApY, RMFX, RM
FY ; line 2
; [TAIWAN06] : SZ, Sds, Sd1, Sms, Sm1,Nda, Ndv,Nma, Nmv, ST, Fda, Fdv, Fma, Fmv, SubZ,

;  Sds_t, Sms_t, Td0_t, Tm0_t, IF, ALPHA, PM, PAX, PAY, PApX, PApY, PFX, PFY, RMFX, RM
FY ; line 2
```

```
; [EURO2004] : iGR, iSPE, S, TB, TC, TD, AG, Q, LBF, IF, FPX, FPY,
   ; line 2
; [JIS-AI]   : bUSER, STORY1, XDIR1, YDIR1, STORY2, XDIR2, YDIR2, ...
; [KBC2009]  : SZ, ZF, SC, CU, FA, Fv, SDS, SD1, SUG, IF, ip, PAX, PAY, PApX, PApY, RM
FX, RMFY
; [TAIWAN11] : SZ, Sds, Sd1, Sms, Sm1,Nda, Ndv,Nma, Nmv, ST, Fda, Fdv, Fma, Fmv, SubZ,

;  Sds_t, Sms_t, Td0_t, Tm0_t, IF, ALPHA, PM, PAX, PAY, PApX, PApY, PFX, PFY, RMFX, RM
FY ; line 2
; [NTC2008]  : iGR, iSPE, S, TB, TC, TD, AG, Q, AMPF, Tc*, FPX, FPY,
   ; line 2
; [CH2010]   : NSC, SFI, SC, ST, DR, EQ, bMM, FPX, FPY
   ; line 2
; [IBC2009]  : SC, Ss, S1, Fa, Fv, Sds, Sd1, Cu, TL, OC, IF, iP, PAX, PAY, PApX, PApY,
 RMFX, RMFY ; line 2
; [IBC2012]  : SC, Ss, S1, Fa, Fv, Sds, Sd1, Cu, TL, RC, IF, iP, PAX, PAY, PApX, PApY,
 RMFX, RMFY ; line 2
; [NTC2012]  : iGR, iSPE, S, TB, TC, TD, AG, Q, AMPF, Tc*, FPX, FPY,
   ; line 2
; [P100_2013]: iSPE, TB, TC, TD, AG, Q, IF, FPX, FPY
   ; line 2
; [IS1893_2016]: Zone, Soil, IF, Damp, Peri.X, Peri.Y, RsRdFact_X, RsRdFact_Y
   ; line 2
; [NTC2018]  : iGR, iSPE, S, TB, TC, TD, AG, Q, AMPF, Tc*, FPX, FPY,
   ; line 2
; SSTORY1, ESTORY1, ADDX1, ADDY1, ...
   ; from line 3
   CODE=NTC2018, 0, 1, POS, POS, NO, NO, , 0
        2, 4, 1.427, 0.147, 0.44, 2.336, 0.184, 1, 2.47, 0.273, 0, 0

; End of data for load case [SISMA Y] -------------------------

*USE-STLD, travi

*BEAMLOAD    ; Element Beam Loads
; ELEM_LIST, CMD, TYPE, DIR, bPROJ, [ECCEN], [VALUE], GROUP
; ELEM_LIST, CMD, TYPE, TYPE, DIR, VX, VY, VZ, bPROJ, [ECCEN], [VALUE], GROUP
; [VALUE]       : D1, P1, D2, P2, D3, P3, D4, P4
; [ECCEN]       : bECCEN, ECCDIR, I-END, J-END, bJ-END
; [ADDITIONAL]  : bADDITIONAL, ADDITIONAL_I-END, ADDITIONAL_J-END, bADDITIONAL_J-END
  6045, BEAM   , UNILOAD, GZ, NO , NO, aDir[1], , , , 0, -1, 1, -1, 0, 0, 0, 0, , NO,
0, 0, NO,
  6047, BEAM   , UNILOAD, GZ, NO , NO, aDir[1], , , , 0, -1, 1, -1, 0, 0, 0, 0, , NO,
0, 0, NO,
  6055, BEAM   , UNILOAD, GZ, NO , NO, aDir[1], , , , 0, -1, 1, -1, 0, 0, 0, 0, , NO,
0, 0, NO,
  6062, BEAM   , UNILOAD, GZ, NO , NO, aDir[1], , , , 0, -1, 1, -1, 0, 0, 0, 0, , NO,
0, 0, NO,
  6067, BEAM   , UNILOAD, GZ, NO , NO, aDir[1], , , , 0, -1, 1, -1, 0, 0, 0, 0, , NO,
0, 0, NO,
  6073, BEAM   , UNILOAD, GZ, NO , NO, aDir[1], , , , 0, -1, 1, -1, 0, 0, 0, 0, , NO,
0, 0, NO,
  6074, BEAM   , UNILOAD, GZ, NO , NO, aDir[1], , , , 0, -1, 1, -1, 0, 0, 0, 0, , NO,
0, 0, NO,
  6075, BEAM   , UNILOAD, GZ, NO , NO, aDir[1], , , , 0, -1, 1, -1, 0, 0, 0, 0, , NO,
0, 0, NO,
  6076, BEAM   , UNILOAD, GZ, NO , NO, aDir[1], , , , 0, -1, 1, -1, 0, 0, 0, 0, , NO,
0, 0, NO,
  6077, BEAM   , UNILOAD, GZ, NO , NO, aDir[1], , , , 0, -1, 1, -1, 0, 0, 0, 0, , NO,
0, 0, NO,
  6078, BEAM   , UNILOAD, GZ, NO , NO, aDir[1], , , , 0, -1, 1, -1, 0, 0, 0, 0, , NO,
0, 0, NO,
```

```
; End of data for load case [travi] -------------------------

*USE-STLD, parapetto

*BEAMLOAD    ; Element Beam Loads
; ELEM_LIST, CMD, TYPE, DIR, bPROJ, [ECCEN], [VALUE], GROUP
; ELEM_LIST, CMD, TYPE, TYPE, DIR, VX, VY, VZ, bPROJ, [ECCEN], [VALUE], GROUP
; [VALUE]       : D1, P1, D2, P2, D3, P3, D4, P4
; [ECCEN]       : bECCEN, ECCDIR, I-END, J-END, bJ-END
; [ADDITIONAL]  : bADDITIONAL, ADDITIONAL_I-END, ADDITIONAL_J-END, bADDITIONAL_J-END
  6025, BEAM   , UNILOAD, GZ, NO , NO, aDir[1], , , , 0, -1, 0.648496, -1, 0, 0, 0, 0,
 , NO, 0, 0, NO,
  6025, BEAM   , UNILOAD, GZ, NO , NO, aDir[1], , , , 0.648496, -1, 1, -1, 0, 0, 0, 0,
 , NO, 0, 0, NO,
  6027, BEAM   , UNILOAD, GZ, NO , NO, aDir[1], , , , 0, -1, 1, -1, 0, 0, 0, 0, , NO,
0, 0, NO,
  6028, BEAM   , UNILOAD, GZ, NO , NO, aDir[1], , , , 0, -1, 1, -1, 0, 0, 0, 0, , NO,
0, 0, NO,
  6032, BEAM   , UNILOAD, GZ, NO , NO, aDir[1], , , , 0, -1, 1, -1, 0, 0, 0, 0, , NO,
0, 0, NO,
  6034, BEAM   , UNILOAD, GZ, NO , NO, aDir[1], , , , 0, -1, 1, -1, 0, 0, 0, 0, , NO,
0, 0, NO,
  6036, BEAM   , UNILOAD, GZ, NO , NO, aDir[1], , , , 0, -1, 1, -1, 0, 0, 0, 0, , NO,
0, 0, NO,
  6045, BEAM   , UNILOAD, GZ, NO , NO, aDir[1], , , , 0, -1, 1, -1, 0, 0, 0, 0, , NO,
0, 0, NO,
  6049, BEAM   , UNILOAD, GZ, NO , NO, aDir[1], , , , 0, -1, 1, -1, 0, 0, 0, 0, , NO,
0, 0, NO,
  6056, BEAM   , UNILOAD, GZ, NO , NO, aDir[1], , , , 0, -1, 1, -1, 0, 0, 0, 0, , NO,
0, 0, NO,
  6063, BEAM   , UNILOAD, GZ, NO , NO, aDir[1], , , , 0, -1, 1, -1, 0, 0, 0, 0, , NO,
0, 0, NO,
  6070, BEAM   , UNILOAD, GZ, NO , NO, aDir[1], , , , 0, -1, 1, -1, 0, 0, 0, 0, , NO,
0, 0, NO,
  6080, BEAM   , UNILOAD, GZ, NO , NO, aDir[1], , , , 0, -1, 1, -1, 0, 0, 0, 0, , NO,
0, 0, NO,
  6082, BEAM   , UNILOAD, GZ, NO , NO, aDir[1], , , , 0, -1, 1, -1, 0, 0, 0, 0, , NO,
0, 0, NO,
  6083, BEAM   , UNILOAD, GZ, NO , NO, aDir[1], , , , 0, -1, 1, -1, 0, 0, 0, 0, , NO,
0, 0, NO,
  6084, BEAM   , UNILOAD, GZ, NO , NO, aDir[1], , , , 0, -1, 1, -1, 0, 0, 0, 0, , NO,
0, 0, NO,
  6085, BEAM   , UNILOAD, GZ, NO , NO, aDir[1], , , , 0, -1, 1, -1, 0, 0, 0, 0, , NO,
0, 0, NO,
  6087, BEAM   , UNILOAD, GZ, NO , NO, aDir[1], , , , 0, -1, 1, -1, 0, 0, 0, 0, , NO,
0, 0, NO,
  6088, BEAM   , UNILOAD, GZ, NO , NO, aDir[1], , , , 0, -1, 1, -1, 0, 0, 0, 0, , NO,
0, 0, NO,
  6089, BEAM   , UNILOAD, GZ, NO , NO, aDir[1], , , , 0, -1, 1, -1, 0, 0, 0, 0, , NO,
0, 0, NO,
  6090, BEAM   , UNILOAD, GZ, NO , NO, aDir[1], , , , 0, -1, 1, -1, 0, 0, 0, 0, , NO,
0, 0, NO,
  6091, BEAM   , UNILOAD, GZ, NO , NO, aDir[1], , , , 0, -1, 1, -1, 0, 0, 0, 0, , NO,
0, 0, NO,
  6092, BEAM   , UNILOAD, GZ, NO , NO, aDir[1], , , , 0, -1, 1, -1, 0, 0, 0, 0, , NO,
0, 0, NO,
  6093, BEAM   , UNILOAD, GZ, NO , NO, aDir[1], , , , 0, -1, 1, -1, 0, 0, 0, 0, , NO,
0, 0, NO,
  6094, BEAM   , UNILOAD, GZ, NO , NO, aDir[1], , , , 0, -1, 1, -1, 0, 0, 0, 0, , NO,
0, 0, NO,
  6095, BEAM   , UNILOAD, GZ, NO , NO, aDir[1], , , , 0, -1, 1, -1, 0, 0, 0, 0, , NO,
```

```
0, 0, NO,
  6096, BEAM   , UNILOAD, GZ, NO , NO, aDir[1], , , , 0, -1, 1, -1, 0, 0, 0, 0, , NO,
0, 0, NO,
  6097, BEAM   , UNILOAD, GZ, NO , NO, aDir[1], , , , 0, -1, 1, -1, 0, 0, 0, 0, , NO,
0, 0, NO,
  6109, BEAM   , UNILOAD, GZ, NO , NO, aDir[1], , , , 0, -1, 1, -1, 0, 0, 0, 0, , NO,
0, 0, NO,
  6110, BEAM   , UNILOAD, GZ, NO , NO, aDir[1], , , , 0, -1, 1, -1, 0, 0, 0, 0, , NO,
0, 0, NO,

; End of data for load case [parapetto] -------------------------

*USE-STLD, muro

*BEAMLOAD    ; Element Beam Loads
; ELEM_LIST, CMD, TYPE, DIR, bPROJ, [ECCEN], [VALUE], GROUP
; ELEM_LIST, CMD, TYPE, TYPE, DIR, VX, VY, VZ, bPROJ, [ECCEN], [VALUE], GROUP
; [VALUE]       : D1, P1, D2, P2, D3, P3, D4, P4
; [ECCEN]       : bECCEN, ECCDIR, I-END, J-END, bJ-END
; [ADDITIONAL]  : bADDITIONAL, ADDITIONAL_I-END, ADDITIONAL_J-END, bADDITIONAL_J-END
  6073, BEAM   , UNILOAD, GZ, NO , NO, aDir[1], , , , 0, -1, 1, -1, 0, 0, 0, 0, , NO,
0, 0, NO,
  6074, BEAM   , UNILOAD, GZ, NO , NO, aDir[1], , , , 0, -1, 1, -1, 0, 0, 0, 0, , NO,
0, 0, NO,
  6075, BEAM   , UNILOAD, GZ, NO , NO, aDir[1], , , , 0, -1, 1, -1, 0, 0, 0, 0, , NO,
0, 0, NO,
  6076, BEAM   , UNILOAD, GZ, NO , NO, aDir[1], , , , 0, -1, 1, -1, 0, 0, 0, 0, , NO,
0, 0, NO,
  6077, BEAM   , UNILOAD, GZ, NO , NO, aDir[1], , , , 0, -1, 1, -1, 0, 0, 0, 0, , NO,
0, 0, NO,
  6078, BEAM   , UNILOAD, GZ, NO , NO, aDir[1], , , , 0, -1, 1, -1, 0, 0, 0, 0, , NO,
0, 0, NO,

; End of data for load case [muro] -------------------------

*SFUNCTION    ; Spectrum Function
; FUNC=NAME, iTYPE, iMETHOD, SCALE/MAX, GRAV, DRATIO, DESC, RMF      ; line 1
;   SPEC_CODE, [CODE_DATA]                                            ; line 2
;      PERIOD1, VALUE1, PERIOD2, VALUE2, ...                          ; from line 3
;[CODE_DATA] : NSC, SFI, SC, EQ, TG, DP, MaxEQ
        ; CH2001
;[CODE_DATA] : NSC, SFI, SC, EQ, TG, DP, MaxEQ, nLForce              ; CH2010
;[CODE_DATA] : SFI, SC, EQ, TG, DP, MaxEQ                            ; CHSH2003
;[CODE_DATA] : DIV, SC, SFI, EQ, TG, G                               ; GB50111_2006
;[CODE_DATA] : BT, ZM, ST, SI, SC, TG, CI, CS, CD, EPA, SMAX, PERIOD ; JTG/T B02-01-20
08
;[CODE_DATA] : iSPE, SParam, TB, TC, TD, AG, Q, IF, FPX, FPY         ; P100-1(2013)
   FUNC=Muscoline_T1_C_q=1__CU III, 1, 0, 1, 9.806, 0.05, , 1.000000
   USER
          0.000000,         0.263,   0.007000,         0.282
          0.015000,         0.301,   0.022000,          0.32
          0.029000,          0.34,   0.037000,         0.359
          0.044000,         0.378,   0.051000,         0.398
          0.059000,         0.417,   0.066000,         0.436
          0.073000,         0.456,   0.081000,         0.475
          0.088000,         0.494,   0.095000,         0.513
          0.103000,         0.533,   0.110000,         0.552
          0.117000,         0.571,   0.125000,         0.591
          0.132000,          0.61,   0.139000,         0.629
          0.147000,         0.648,   0.161000,         0.648
          0.176000,         0.648,   0.191000,         0.648
          0.206000,         0.648,   0.220000,         0.648
```

```
          0.235000,         0.648,   0.250000,         0.648
          0.264000,         0.648,   0.279000,         0.648
          0.294000,         0.648,   0.308000,         0.648
          0.323000,         0.648,   0.338000,         0.648
          0.352000,         0.648,   0.367000,         0.648
          0.382000,         0.648,   0.396000,         0.648
          0.411000,         0.648,   0.426000,         0.648
          0.440000,         0.648,   0.535000,         0.534
          0.630000,         0.453,   0.725000,         0.394
          0.820000,         0.349,   0.914000,         0.312
          1.009000,         0.283,   1.104000,         0.259
          1.199000,         0.238,   1.293000,         0.221
          1.388000,         0.206,   1.483000,         0.193
          1.578000,         0.181,   1.672000,         0.171
          1.767000,         0.162,   1.862000,         0.153
          1.957000,         0.146,   2.051000,         0.139
          2.146000,         0.133,   2.241000,         0.127
          2.336000,         0.122,   2.419000,         0.114
          2.502000,         0.107,   2.585000,           0.1
          2.669000,         0.094,   2.752000,         0.088
          2.835000,         0.083,   2.918000,         0.078
          3.001000,         0.074,   3.085000,          0.07
          3.168000,         0.066,   3.251000,         0.063
          3.334000,          0.06,   3.418000,         0.057
          3.501000,         0.054,   3.584000,         0.052
          3.667000,          0.05,   3.750000,         0.047
          3.834000,         0.045,   3.917000,         0.043
          4.000000,         0.042

*SPLDCASE    ; Spectrum Load Cases
; NAME=NAME, DIR, ANGLE, SCALE, PMFT, bDAMP, bECC, INTERP, DESC,       ; line 1
;      COMTYPE, bADDSIGN, iSIGNTYPE, bMODE, bASA, iMAJ                 ; line 2
;      FUNC1, FUNC2, FUNC3, ...                                        ; line 3
;      bUSE1, dFACTOR1, bUSE2, dFACTOR2, ..., bUSEn, dFACTORn          ; line 4      (
bMODE=YES)
;      bCDR, [DR-DC]                                                   ; line 5      (
bDAMP=YES)
;      SMETHOD, bAUTO, ECC, bCONSGL, bTORMOMENT                        ; line 6      (
bECC=YES)
;      STORY1, ECC1, STORY2, ECC2, ..., STORYn, ECCn                   ; from line 7 (
bECC=YES)
; [DR-DC] : iMDTYPE, DALL, iMODE1, DAMPING1, iMODE2, DAMPING2, ...     ; iMDTYPE=1
;         : iMDTYPE, iCOEF, bMASSP, MASSC, bSTIFFP, STIFFC             ; iMDTYPE=2, iC
OEF=1
;         : iMDTYPE, iCOEF, iCALC, bMASSP, FP1, DR1, bSTIFFP, FP2, DR2 ; iMDTYPE=2, iC
OEF=2
;         : iMDTYPE                                                    ; iMDTYPE=3
   NAME=sisma_x, XY, 0, 1, 1, NO, YES, LOG,
        CQC, YES, 0, YES, NO, 0
        Muscoline_T1_C_q=1__CU III
        YES, 1,YES, 1,YES, 1,YES, 1,YES, 1,YES, 1,YES, 1,YES, 1,YES, 1,YES, 1,YES, 1,YES, 1
        0, YES, 5, YES, NO
        Roof, 0.920562, 1F, 0.920562

   NAME=sisma_y, XY, 90, 1, 1, NO, YES, LOG,
        CQC, YES, 0, YES, NO, 0
        Muscoline_T1_C_q=1__CU III
        YES, 1,YES, 1,YES, 1,YES, 1,YES, 1,YES, 1,YES, 1,YES, 1,YES, 1,YES, 1,YES, 1,YES, 1
        0, YES, 5, YES, NO
        Roof, 1.4175, 1F, 1.4175
```

```
*PUSHOVER-CTRL    ; Pushover Global Control
; GEOM, bPERMIT, STEP, iMAX, bDISP, bFORCE, bENERGY, DNORM, FNORM, ENORM, bSTOP, bBEAM
, bWALL, METHOD, bAXIS, bAXISBEAM, bAXISWALL, bAXISTRUSS, SUPPORT, ELASTIC, bSUPPORT,
bSUPPORTUPLIFT, bSUPPORTCOLLAPSE, ; 1st line : Analysis Option
; NODECONNECTIVITY, nBEAMy, nBEAMz, bWALL, nWALLy, nWALLz, dR, WSize, bMEMB, nRCCODE,
bUseRef, bGraph, bCurve ; 1st line(2) : Analysis Option
; bSYMMETRIC, a1(+), a1(-), a2(+), a2(-)                                ; 2nd line : De
fault Stiffness Ratio(Trilinear)
; bSYMMETRIC, a1(+), a1(-)                                              ; 3rd line : De
fault Stiffness Ratio(Bilinear)
; BM_POS, bBUCKLING, bCR_AIJ, bIgnoreElem                               ; 4th line
; BM_POS, bBUCKLING, bCR_AIJ, 1, CF, WAL, bBTL, BTL, bERTH, ERTH, bSBR, SBR, GRP ; 4th
 line (Eurocode)
; BM_POS, bBUCKLING, bCR_AIJ, 2, bAXIAL_AIJ                             ; 4th line (AIJ
)
; LCNAME1, FACT1, LCNAME2, FACT2, ...                                   ; from line 5th
 line  : Initial Load
; LCTYPE1, LCTYPE2, ...                                                 ; Last line
       : Initial Load
   0, YES, 10, 10, YES, NO, NO, 0.001, 0.001, 0.001, NO, YES, NO, 0, NO, YES, NO, NO,
0, 1, NO, NO, NO, 1, 15, 15, NO, EQUAL, 20, 10, 0.4, NO, 0, NO, YES, YES
   YES, 0.1, 0.1, 0.05, 0.05
   YES, 0.05, 0.05
   I, NO, YES, YES, 1, 1, 1.6, NO, 1.6, NO, 0.85, NO, 0.575,
   PP, 1, G1+G2 copertura A, 3.7, G1+G2 copertura B, 1.5, Q sottotetto, 0.3
   sporto gronda, 2, travi, 3, parapetto, 1.5, muro, 4.6
   1, 1, 1, 1, 1, 1, 1, 1
*HINGE-TYPE    ; Pushover Hinge Type/Properties
; NAME=NAME, DESC                                                                        ;
1st line
; ELEM_TYP, WALL_TYP, MAT_TYP, DEFINITION, INTERACTION, bHINGELENGTH, INTEGRATION   ;
2nd line (ELEM_TYP=WALL)
; ELEM_TYP, MAT_TYP, DEFINITION, INTERACTION , bHINGELENGTH, INTEGRATION            ;
2nd line
; HINGE_TYPE, PROP, FIBER, FIBER_AUTO, AUTO_R, R, AUTO_OUTPL, OUTPL                 ;
3rd line
; bFx, HLOC[NSECT], [DISTR], [RAT_I], [RAT_J], SKCV, [M_PROP]   ; 4rd line
; bFy, HLOC[NSECT], [DISTR], [RAT_I], [RAT_J], SKCV, [M_PROP]   ; 5th line
; bFz, HLOC[NSECT], [DISTR], [RAT_I], [RAT_J], SKCV, [M_PROP]   ; 6th line
; bMx, HLOC[NSECT], [DISTR], [RAT_I], [RAT_J], SKCV, [M_PROP]   ; 7th line
; bMy, HLOC[NSECT], [DISTR], [RAT_I], [RAT_J], SKCV, [M_PROP]   ; 8th line
; bMz, HLOC[NSECT], [DISTR], [RAT_I], [RAT_J], SKCV, [M_PROP]   ; 9th line
; CALC, bSYM-IJ, [YSDATA]-I, [YSDATA]-J                  ; 10th line (MAT_TYPE=RC,STEE
L, INTERACTION=PMM)
; BLDG_TYPE, COMP, SHEAR, COEFF                          ; 10th line (MAT_TYPE=MASONRY
,  DEFINITION=PIER)
; COMP, SHEAR, FORC                                      ; 10th line (MAT_TYPE=MASONRY
,  DEFINITION=SPAN)
; [M_PROP] : CALC, TYPE, [PROP]
    ; (SKCV=BI,TRI,SLBI,SLTR)
; [M_PROP] : CALC, TYPE, bSYM_IJ, [PROP]-I, [PROP]-J
    ; (SKCV=BI,TRI,SLBI,SLTR, HLOC=IJ)
; [M_PROP] : CALC, [FEMA]
    ; (SKCV=FEMA)
; [M_PROP] : CALC, [EC8]
    ; (SKCV=EC8)
; [M_PROP] : CALC, bSYM_IJ, [FEMA]-I  [FEMA]-J
    ; (SKCV=FEMA, HLOC=IJ)
; [PROP] : bSYM, RATIO_OPT, [DATA]-TENS, [DATA]-COMP, STIF_METHOD, STIFF
    ; (SKCV=BI,TRI)
; [PROP] : bSYM, RATIO_OPT, [DATA]-TENS, [DATA]-COMP, STIF_METHOD, STIFF, bAutoSpan, S
```

```
PAN ; (SKCV=TRI, RATIO_OPT=AIJ)
; [PROP] : SLIP_TYPE, RATIO_OPT, [DATA]-TENS, [DATA]-COMP, STIF_METHOD, STIFF, IGT, IG
C    ; (SKCV=SLBI,SLTR)
; [DATA] : YS-P1, YS-P2, YS-P3, SRR1, SRR2, SRRy,
    ; (TYPE=RATIO)
; [DATA] : YS-P1, YS-P2, YS-P3, YD-D1, YD-D2, YD-D3
    ; (TYPE=DEFORM)
; [FEMA] : DEFORM, bSYM, bMULT, SUBCOUNT, YS-P1P, YS-P1N, bUSER-D, YD-D1P, YD-D1N,
;        : STIF_METHOD, STIFF, IO-P, LS-P, CP-P, IO-N, LS-N, CP-N, bUSER-RATIO
;        : bSHAPE, SHAPE, bSTRLOSS, STRLOSS, INFILLTYPE, bTOTALSTRLOSS, TOTALSTRLOSS,
UNLOADTYPE, dEXP, dPRFACT, INFILLSTIFF, KMI, KMS, HM, TM
;        : EN-FR, DN-FR, CN-FR, BN-FR, A-FR, BP-FR, CP-FR, DP-FR, EP-FR  ; F/FY or M/M
Y
;        : EN-DR, DN-DR, CN-DR, BN-DR, A-DR, BP-DR, CP-DR, DP-DR, EP-DR  ; D/DY
;        : AXIAL, IO-P, LS-P, CP-P, IO-N, LS-N, CP-N                     ; (bMULT=YES)
, Loop  SUBCOUNT
;        : EN-FR, DN-FR, CN-FR, BN-FR, A-FR, BP-FR, CP-FR, DP-FR, EP-FR  ; (bMULT=YES)
 F/FY or M/MY
;        : EN-DR, DN-DR, CN-DR, BN-DR, A-DR, BP-DR, CP-DR, DP-DR, EP-DR  ; (bMULT=YES)
 D/DY
; [EC8]  : bSYM, bMULT, SUBCOUNT, YS-P1P, YS-P1N, bUSER-D, YD-D1P, YD-D1N,
;        : STIF_METHOD, STIFF-P, STIFF-M, IO-P, LS-P, CP-P, IO-N, LS-N, CP-N, bUSER-RA
TIO
;        : EN-FR, DN-FR, CN-FR, BN-FR, A-FR, BP-FR, CP-FR, DP-FR, EP-FR  ; F/FY or M/M
Y
;        : EN-DR, DN-DR, CN-DR, BN-DR, A-DR, BP-DR, CP-DR, DP-DR, EP-DR  ; D/DY
; [YSDATA] : bSYM-YZ, bSYM-PN, PC0, PMAX,
;          : MY1-P, MY1-N, MY2-P, MY2-N, MZ1-P, MZ1-N, MZ2-P, MZ2-N,
;          : INTPOLATION, ALPHA, bSYM-Y, bSYM-Z, [YSPROP]-1ST,  [YSPROP]-2ND
; [YSPROP] : PY1P, PY2P, PY3P,..., PY10P, PY11P, MY1P, MY2P,..., MY10P, MY11P
;          : PY1N, PY2N, PY3N,..., PY10N, PY11N, MY1N, MY2N,..., MY10N, MY11N
;          : PZ1P, PZ2P, PZ3P,..., PZ10P, PZ11P, MZ1P, MZ2P,..., MZ10P, MZ11P
;          : PZ1N, PZ2N, PZ3N,..., PZ10N, PZ11N, MZ1N, MZ2N,..., MZ10N, MZ11N
  NAME=Maschi MA, Maschi
    BEAM, , MASONRY, PIER, NONE, NO, 0, 0.5, 0.5, 0.5, 0.5, YES
    0, 0, 0, 1, 0, 0.4, 0, NO, NONE
    YES, C, FEMA, USER, \
      D/DY, NO, NO, 1, 1, 1, NO, 0, 0, , ELASTIC, 0, 2, 4, 6, 2, 4, 6, YES, \
      NO, GENERAL, NO, YES, FULL, NO, NO, NO, ORIGIN_ORIENTED, 0.4, 0.5, ELASTIC, 2000
, 500, 1, 1, \
      -1.75, -1.75, -1.75, -1, 0, 5, 5, 5, 5, \
      -0.2, -0.2, -1, -1, 0, 0, 0, 0, 0
    NO
    YES, C, FEMA, USER, \
      D/DY, YES, NO, 1, 1, 1, NO, 0, 0, , ELASTIC, 0, 2, 4, 6, 2, 4, 6, YES, \
      NO, GENERAL, NO, YES, FULL, NO, NO, NO, ORIGIN_ORIENTED, 0.4, 0.5, ELASTIC, 2000
, 500, 1, 1, \
      -0.006, -0.004, -0.004, -0.001, 0, 0.001, 0.004, 0.004, 0.006, \
      -0.3, -0.3, -1.001, -1, 0, 1, 1.001, 0.3, 0.3
    NO
    YES, IJ, FEMA, USER, YES, \
      D/DY, YES, NO, 1, 1, 1, NO, 0, 0, , 6EI, 0, 2, 4, 6, 2, 4, 6, YES, \
      NO, GENERAL, NO, YES, FULL, NO, NO, NO, ORIGIN_ORIENTED, 0.4, 0.5, ELASTIC, 2000
, 500, 1, 1, \
      -0.009, -0.006, -0.006, -0.001, 0, 0.001, 0.006, 0.006, 0.009, \
      -0.3, -0.3, -1.001, -1, 0, 1, 1.001, 0.3, 0.3, \
      D/DY, YES, NO, 1, 1, 1, NO, 0, 0, , 6EI, 0, 2, 4, 6, 2, 4, 6, YES, \
      NO, GENERAL, NO, YES, FULL, NO, NO, NO, ORIGIN_ORIENTED, 0.4, 0.5, ELASTIC, 2000
, 500, 1, 1, \
      -0.009, -0.006, -0.006, -0.001, 0, 0.001, 0.006, 0.006, 0.009, \
      -0.3, -0.3, -1.001, -1, 0, 1, 1.001, 0.3, 0.3
    NO
```

```
    EXIST, 2560, 67, 0.85
  NAME=Pilastri c.a.,
    BEAM, , RC, MTHETA, PMM, NO, 0, 0.5, 0.5, 0.5, 0.5, YES
    0, 0, 0, 1, 0, 0.4, 0, NO, NONE
    YES, IJ, EC8, AUTO, YES, \
      D/DY, NO, NO, 1, 1, 1, NO, 1, 1, 1, ELASTIC, 0, 0, 1.25, 4, 6, 1, 1, 1, NO, \
      NO, GENERAL, NO, YES, FULL, NO, NO, NO, ORIGIN_ORIENTED, 0.4, 0.5, ELASTIC, 2000
, 500, 1, 1, \
      -8, -1.01, -1.01, -1, 0, 1, 6, 6, 8, \
      -0.2, -0.2, -1, -1, 0, 1, 1.001, 0.2, 0.2, \
      D/DY, NO, NO, 1, 1, 1, NO, 1, 1, 1, ELASTIC, 0, 0, 1.25, 4, 6, 1, 1, 1, NO, \
      NO, GENERAL, NO, YES, FULL, NO, NO, NO, ORIGIN_ORIENTED, 0.4, 0.5, ELASTIC, 2000
, 500, 1, 1, \
      -8, -1.01, -1.01, -1, 0, 1, 6, 6, 8, \
      -0.2, -0.2, -1, -1, 0, 1, 1.001, 0.2, 0.2
    YES, IJ, EC8, AUTO, YES, \
      D/DY, NO, NO, 1, 1, 1, NO, 1, 1, , ELASTIC, 0, 0, 1, 1, 1, 1, 1, 1, NO, \
      NO, GENERAL, NO, YES, FULL, NO, NO, NO, ORIGIN_ORIENTED, 0.4, 0.5, ELASTIC, 2000
, 500, 1, 1, \
      -8, -1.01, -1.01, -1, 0, 1, 1.01, 1.01, 8, \
      -0.2, -0.2, -1, -1, 0, 1, 1, 0.2, 0.2, \
      D/DY, NO, NO, 1, 1, 1, NO, 1, 1, , ELASTIC, 0, 0, 1, 1, 1, 1, 1, 1, NO, \
      NO, GENERAL, NO, YES, FULL, NO, NO, NO, ORIGIN_ORIENTED, 0.4, 0.5, ELASTIC, 2000
, 500, 1, 1, \
      -8, -1.01, -1.01, -1, 0, 1, 1.01, 1.01, 8, \
      -0.2, -0.2, -1, -1, 0, 1, 1, 0.2, 0.2
    YES, IJ, EC8, AUTO, YES, \
      D/DY, NO, NO, 1, 1, 1, NO, 1, 1, , ELASTIC, 0, 0, 1, 1, 1, 1, 1, 1, NO, \
      NO, GENERAL, NO, YES, FULL, NO, NO, NO, ORIGIN_ORIENTED, 0.4, 0.5, ELASTIC, 2000
, 500, 1, 1, \
      -8, -1.01, -1.01, -1, 0, 1, 1.01, 1.01, 8, \
      -0.2, -0.2, -1, -1, 0, 1, 1, 0.2, 0.2, \
      D/DY, NO, NO, 1, 1, 1, NO, 1, 1, , ELASTIC, 0, 0, 1, 1, 1, 1, 1, 1, NO, \
      NO, GENERAL, NO, YES, FULL, NO, NO, NO, ORIGIN_ORIENTED, 0.4, 0.5, ELASTIC, 2000
, 500, 1, 1, \
      -8, -1.01, -1.01, -1, 0, 1, 1.01, 1.01, 8, \
      -0.2, -0.2, -1, -1, 0, 1, 1, 0.2, 0.2
    NO
    YES, IJ, EC8, AUTO, YES, \
      D/DY, NO, NO, 1, 1, 1, NO, 1, 1, 1, 6EI, 1, 1, 1, 0.75, 1, 1, 0.75, 1, NO, \
      NO, GENERAL, NO, YES, FULL, NO, NO, NO, ORIGIN_ORIENTED, 0.4, 0.5, ELASTIC, 2000
, 500, 1, 1, \
      -12, -9, -9, -1, 0, 1, 9, 9, 12, \
      -0.2, -0.2, -1.001, -1, 0, 1, 1.001, 0.2, 0.2, \
      D/DY, NO, NO, 1, 1, 1, NO, 1, 1, 1, 6EI, 1, 1, 1, 0.75, 1, 1, 0.75, 1, NO, \
      NO, GENERAL, NO, YES, FULL, NO, NO, NO, ORIGIN_ORIENTED, 0.4, 0.5, ELASTIC, 2000
, 500, 1, 1, \
      -12, -9, -9, -1, 0, 1, 9, 9, 12, \
      -0.2, -0.2, -1.001, -1, 0, 1, 1.001, 0.2, 0.2
    YES, IJ, EC8, AUTO, YES, \
      D/DY, NO, NO, 1, 1, 1, NO, 1, 1, 1, 6EI, 1, 1, 1, 0.75, 1, 1, 0.75, 1, NO, \
      NO, GENERAL, NO, YES, FULL, NO, NO, NO, ORIGIN_ORIENTED, 0.4, 0.5, ELASTIC, 2000
, 500, 1, 1, \
      -12, -9, -9, -1, 0, 1, 9, 9, 12, \
      -0.2, -0.2, -1.001, -1, 0, 1, 1.001, 0.2, 0.2, \
      D/DY, NO, NO, 1, 1, 1, NO, 1, 1, 1, 6EI, 1, 1, 1, 0.75, 1, 1, 0.75, 1, NO, \
      NO, GENERAL, NO, YES, FULL, NO, NO, NO, ORIGIN_ORIENTED, 0.4, 0.5, ELASTIC, 2000
, 500, 1, 1, \
      -12, -9, -9, -1, 0, 1, 9, 9, 12, \
      -0.2, -0.2, -1.001, -1, 0, 1, 1.001, 0.2, 0.2
    AUTO, YES, NO, YES, 0.5, 1, 0.5, 0.5, 1, 1, 0.5, 0.5, 1, 1, ELLIPSE, 2, YES, YES,
\
```

```
      1, 0.8, 0.6, 0.4, 0.2, 0, -0.2, -0.4, -0.6, -0.8, -1, 0, 0.3, 0.6, 0.8, 0.9, 1,
0.9, 0.8, 0.6, 0.3, 0, \
      1, 0.8, 0.6, 0.4, 0.2, 0, -0.2, -0.4, -0.6, -0.8, -1, -0, -0.3, -0.6, -0.8, -0.9
, -1, -0.9, -0.8, -0.6, -0.3, -0, \
      1, 0.8, 0.6, 0.4, 0.2, 0, -0.2, -0.4, -0.6, -0.8, -1, 0, 0.3, 0.6, 0.8, 0.9, 1,
0.9, 0.8, 0.6, 0.3, 0, \
      1, 0.8, 0.6, 0.4, 0.2, 0, -0.2, -0.4, -0.6, -0.8, -1, -0, -0.3, -0.6, -0.8, -0.9
, -1, -0.9, -0.8, -0.6, -0.3, -0, \
      1, 0.8, 0.6, 0.4, 0.2, 0, -0.2, -0.4, -0.6, -0.8, -1, 0, 0.3, 0.6, 0.8, 0.9, 1,
0.9, 0.8, 0.6, 0.3, 0, \
      1, 0.8, 0.6, 0.4, 0.2, 0, -0.2, -0.4, -0.6, -0.8, -1, -0, -0.3, -0.6, -0.8, -0.9
, -1, -0.9, -0.8, -0.6, -0.3, -0, \
      1, 0.8, 0.6, 0.4, 0.2, 0, -0.2, -0.4, -0.6, -0.8, -1, 0, 0.3, 0.6, 0.8, 0.9, 1,
0.9, 0.8, 0.6, 0.3, 0, \
      1, 0.8, 0.6, 0.4, 0.2, 0, -0.2, -0.4, -0.6, -0.8, -1, -0, -0.3, -0.6, -0.8, -0.9
, -1, -0.9, -0.8, -0.6, -0.3, -0 , \
      NO, YES, 0.5, 1, 0.5, 0.5, 1, 1, 0.5, 0.5, 1, 1, ELLIPSE, 2, YES, YES, \
      1, 0.8, 0.6, 0.4, 0.2, 0, -0.2, -0.4, -0.6, -0.8, -1, 0, 0.3, 0.6, 0.8, 0.9, 1,
0.9, 0.8, 0.6, 0.3, 0, \
      1, 0.8, 0.6, 0.4, 0.2, 0, -0.2, -0.4, -0.6, -0.8, -1, -0, -0.3, -0.6, -0.8, -0.9
, -1, -0.9, -0.8, -0.6, -0.3, -0, \
      1, 0.8, 0.6, 0.4, 0.2, 0, -0.2, -0.4, -0.6, -0.8, -1, 0, 0.3, 0.6, 0.8, 0.9, 1,
0.9, 0.8, 0.6, 0.3, 0, \
      1, 0.8, 0.6, 0.4, 0.2, 0, -0.2, -0.4, -0.6, -0.8, -1, -0, -0.3, -0.6, -0.8, -0.9
, -1, -0.9, -0.8, -0.6, -0.3, -0, \
      1, 0.8, 0.6, 0.4, 0.2, 0, -0.2, -0.4, -0.6, -0.8, -1, 0, 0.3, 0.6, 0.8, 0.9, 1,
0.9, 0.8, 0.6, 0.3, 0, \
      1, 0.8, 0.6, 0.4, 0.2, 0, -0.2, -0.4, -0.6, -0.8, -1, -0, -0.3, -0.6, -0.8, -0.9
, -1, -0.9, -0.8, -0.6, -0.3, -0, \
      1, 0.8, 0.6, 0.4, 0.2, 0, -0.2, -0.4, -0.6, -0.8, -1, 0, 0.3, 0.6, 0.8, 0.9, 1,
0.9, 0.8, 0.6, 0.3, 0, \
      1, 0.8, 0.6, 0.4, 0.2, 0, -0.2, -0.4, -0.6, -0.8, -1, -0, -0.3, -0.6, -0.8, -0.9
, -1, -0.9, -0.8, -0.6, -0.3, -0
  NAME=Pilastri fitt MA, Pilastri fitt
    BEAM, , MASONRY, PIER, NONE, NO, 0, 0.5, 0.5, 0.5, 0.5, YES
    0, 0, 0, 1, 0, 0.4, 0, NO, NONE
    YES, C, FEMA, USER, \
      D/DY, NO, NO, 1, 1, 1, NO, 0, 0, , ELASTIC, 0, 2, 4, 6, 2, 4, 6, YES, \
      NO, GENERAL, NO, YES, FULL, NO, NO, NO, ORIGIN_ORIENTED, 0.4, 0.5, ELASTIC, 2000
, 500, 1, 1, \
      -1.75, -1.75, -1.75, -1, 0, 5, 5, 5, 5, \
      -0.2, -0.2, -1, -1, 0, 0, 0, 0, 0
    NO
    NO
    NO
    NO
    NO
    EXIST, 2560, 67, 0.85
  NAME=Fasce MA, Fasce
    BEAM, , MASONRY, SPAN, NONE, NO, 0, 0.5, 0.5, 0.5, 0.5, YES
    0, 0, 0, 1, 0, 0.4, 0, NO, NONE
    YES, C, FEMA, USER, \
      D/DY, NO, NO, 1, 1, 1, NO, 0, 0, , ELASTIC, 0, 2, 4, 6, 2, 4, 6, YES, \
      NO, GENERAL, NO, YES, FULL, NO, NO, NO, ORIGIN_ORIENTED, 0.4, 0.5, ELASTIC, 2000
, 500, 1, 1, \
      -1.75, -1.75, -1.75, -1, 0, 5, 5, 5, 5, \
      -0.2, -0.2, -1, -1, 0, 0, 0, 0, 0
    NO
    YES, C, FEMA, USER, \
      D/DY, YES, NO, 1, 1, 1, NO, 0, 0, , ELASTIC, 0, 2, 4, 6, 2, 4, 6, YES, \
      NO, GENERAL, NO, YES, FULL, NO, NO, NO, ORIGIN_ORIENTED, 0.4, 0.5, ELASTIC, 2000
, 500, 1, 1, \
```

```
      -0.006, -0.004, -0.004, -0.001, 0, 0.001, 0.004, 0.004, 0.006, \
      -0.3, -0.3, -1.001, -1, 0, 1, 1.001, 0.3, 0.3
    NO
    YES, IJ, FEMA, USER, YES, \
      D/DY, YES, NO, 1, 1, 1, NO, 0, 0, , 6EI, 0, 2, 4, 6, 2, 4, 6, YES, \
      NO, GENERAL, NO, YES, FULL, NO, NO, NO, ORIGIN_ORIENTED, 0.4, 0.5, ELASTIC, 2000
, 500, 1, 1, \
      -0.012, -0.008, -0.008, -0.001, 0, 0.001, 0.008, 0.008, 0.012, \
      -0.3, -0.3, -1.001, -1, 0, 1, 1.001, 0.3, 0.3, \
      D/DY, YES, NO, 1, 1, 1, NO, 0, 0, , 6EI, 0, 2, 4, 6, 2, 4, 6, YES, \
      NO, GENERAL, NO, YES, FULL, NO, NO, NO, ORIGIN_ORIENTED, 0.4, 0.5, ELASTIC, 2000
, 500, 1, 1, \
      -0.012, -0.008, -0.008, -0.001, 0, 0.001, 0.008, 0.008, 0.012, \
      -0.3, -0.3, -1.001, -1, 0, 1, 1.001, 0.3, 0.3
    NO
    2560, 67, 80
  NAME=Maschi MB, Maschi
    BEAM, , MASONRY, PIER, NONE, NO, 0, 0.5, 0.5, 0.5, 0.5, YES
    0, 0, 0, 1, 0, 0.4, 0, NO, NONE
    YES, C, FEMA, USER, \
      D/DY, NO, NO, 1, 1, 1, NO, 0, 0, , ELASTIC, 0, 2, 4, 6, 2, 4, 6, YES, \
      NO, GENERAL, NO, YES, FULL, NO, NO, NO, ORIGIN_ORIENTED, 0.4, 0.5, ELASTIC, 2000
, 500, 1, 1, \
      -1.75, -1.75, -1.75, -1, 0, 5, 5, 5, 5, \
      -0.2, -0.2, -1, -1, 0, 0, 0, 0, 0
    NO
    YES, C, FEMA, USER, \
      D/DY, YES, NO, 1, 1, 1, NO, 0, 0, , ELASTIC, 0, 2, 4, 6, 2, 4, 6, YES, \
      NO, GENERAL, NO, YES, FULL, NO, NO, NO, ORIGIN_ORIENTED, 0.4, 0.5, ELASTIC, 2000
, 500, 1, 1, \
      -0.006, -0.004, -0.004, -0.001, 0, 0.001, 0.004, 0.004, 0.006, \
      -0.3, -0.3, -1.001, -1, 0, 1, 1.001, 0.3, 0.3
    NO
    YES, IJ, FEMA, USER, YES, \
      D/DY, YES, NO, 1, 1, 1, NO, 0, 0, , 6EI, 0, 2, 4, 6, 2, 4, 6, YES, \
      NO, GENERAL, NO, YES, FULL, NO, NO, NO, ORIGIN_ORIENTED, 0.4, 0.5, ELASTIC, 2000
, 500, 1, 1, \
      -0.009, -0.006, -0.006, -0.001, 0, 0.001, 0.006, 0.006, 0.009, \
      -0.3, -0.3, -1.001, -1, 0, 1, 1.001, 0.3, 0.3, \
      D/DY, YES, NO, 1, 1, 1, NO, 0, 0, , 6EI, 0, 2, 4, 6, 2, 4, 6, YES, \
      NO, GENERAL, NO, YES, FULL, NO, NO, NO, ORIGIN_ORIENTED, 0.4, 0.5, ELASTIC, 2000
, 500, 1, 1, \
      -0.009, -0.006, -0.006, -0.001, 0, 0.001, 0.006, 0.006, 0.009, \
      -0.3, -0.3, -1.001, -1, 0, 1, 1.001, 0.3, 0.3
    NO
    EXIST, 3700, 259, 0.85
  NAME=Pilastri fitt MB, Pilastri fitt
    BEAM, , MASONRY, PIER, NONE, NO, 0, 0.5, 0.5, 0.5, 0.5, YES
    0, 0, 0, 1, 0, 0.4, 0, NO, NONE
    YES, C, FEMA, USER, \
      D/DY, NO, NO, 1, 1, 1, NO, 0, 0, , ELASTIC, 0, 2, 4, 6, 2, 4, 6, YES, \
      NO, GENERAL, NO, YES, FULL, NO, NO, NO, ORIGIN_ORIENTED, 0.4, 0.5, ELASTIC, 2000
, 500, 1, 1, \
      -1.75, -1.75, -1.75, -1, 0, 5, 5, 5, 5, \
      -0.2, -0.2, -1, -1, 0, 0, 0, 0, 0
    NO
    NO
    NO
    NO
    NO
    EXIST, 3700, 259, 0.85
  NAME=Fasce MB, Fasce
```

```
    BEAM, , MASONRY, SPAN, NONE, NO, 0, 0.5, 0.5, 0.5, 0.5, YES
    0, 0, 0, 1, 0, 0.4, 0, NO, NONE
    YES, C, FEMA, USER, \
      D/DY, NO, NO, 1, 1, 1, NO, 0, 0, , ELASTIC, 0, 2, 4, 6, 2, 4, 6, YES, \
      NO, GENERAL, NO, YES, FULL, NO, NO, NO, ORIGIN_ORIENTED, 0.4, 0.5, ELASTIC, 2000
, 500, 1, 1, \
      -1.75, -1.75, -1.75, -1, 0, 5, 5, 5, 5, \
      -0.2, -0.2, -1, -1, 0, 0, 0, 0, 0
    NO
    YES, C, FEMA, USER, \
      D/DY, YES, NO, 1, 1, 1, NO, 0, 0, , ELASTIC, 0, 2, 4, 6, 2, 4, 6, YES, \
      NO, GENERAL, NO, YES, FULL, NO, NO, NO, ORIGIN_ORIENTED, 0.4, 0.5, ELASTIC, 2000
, 500, 1, 1, \
      -0.006, -0.004, -0.004, -0.001, 0, 0.001, 0.004, 0.004, 0.006, \
      -0.3, -0.3, -1.001, -1, 0, 1, 1.001, 0.3, 0.3
    NO
    YES, IJ, FEMA, USER, YES, \
      D/DY, YES, NO, 1, 1, 1, NO, 0, 0, , 6EI, 0, 2, 4, 6, 2, 4, 6, YES, \
      NO, GENERAL, NO, YES, FULL, NO, NO, NO, ORIGIN_ORIENTED, 0.4, 0.5, ELASTIC, 2000
, 500, 1, 1, \
      -0.012, -0.008, -0.008, -0.001, 0, 0.001, 0.008, 0.008, 0.012, \
      -0.3, -0.3, -1.001, -1, 0, 1, 1.001, 0.3, 0.3, \
      D/DY, YES, NO, 1, 1, 1, NO, 0, 0, , 6EI, 0, 2, 4, 6, 2, 4, 6, YES, \
      NO, GENERAL, NO, YES, FULL, NO, NO, NO, ORIGIN_ORIENTED, 0.4, 0.5, ELASTIC, 2000
, 500, 1, 1, \
      -0.012, -0.008, -0.008, -0.001, 0, 0.001, 0.008, 0.008, 0.012, \
      -0.3, -0.3, -1.001, -1, 0, 1, 1.001, 0.3, 0.3
    NO
    3700, 259, 80

*HINGE-ASSIGN    ; Assign Pushover Hinge
; TYPE=TYPE_NAME, ELEM_NO(GLINK_NO), HINGE_TYP, FIBER_KEY  ; 1st line
  TYPE=BEAM, 9, Maschi MA, 0
  TYPE=BEAM, 10, Maschi MA, 0
  TYPE=BEAM, 12, Maschi MB, 0
  TYPE=BEAM, 18, Maschi MA, 0
  TYPE=BEAM, 24, Maschi MB, 0
  TYPE=BEAM, 26, Maschi MA, 0
  TYPE=BEAM, 27, Maschi MB, 0
  TYPE=BEAM, 30, Maschi MA, 0
  TYPE=BEAM, 33, Maschi MB, 0
  TYPE=BEAM, 34, Maschi MA, 0
  TYPE=BEAM, 39, Maschi MA, 0
  TYPE=BEAM, 40, Maschi MA, 0
  TYPE=BEAM, 41, Maschi MA, 0
  TYPE=BEAM, 42, Maschi MA, 0
  TYPE=BEAM, 43, Maschi MA, 0
  TYPE=BEAM, 44, Maschi MA, 0
  TYPE=BEAM, 45, Maschi MA, 0
  TYPE=BEAM, 46, Maschi MA, 0
  TYPE=BEAM, 47, Maschi MA, 0
  TYPE=BEAM, 48, Maschi MA, 0
  TYPE=BEAM, 49, Maschi MB, 0
  TYPE=BEAM, 50, Maschi MA, 0
  TYPE=BEAM, 51, Maschi MA, 0
  TYPE=BEAM, 52, Maschi MA, 0
  TYPE=BEAM, 53, Maschi MB, 0
  TYPE=BEAM, 54, Maschi MA, 0
  TYPE=BEAM, 55, Pilastri fitt MA, 0
  TYPE=BEAM, 56, Maschi MA, 0
  TYPE=BEAM, 57, Maschi MA, 0
  TYPE=BEAM, 58, Maschi MA, 0
```

```
  TYPE=BEAM, 59, Maschi MA, 0
  TYPE=BEAM, 60, Maschi MA, 0
  TYPE=BEAM, 61, Maschi MA, 0
  TYPE=BEAM, 62, Maschi MA, 0
  TYPE=BEAM, 2001, Pilastri fitt MB, 0
  TYPE=BEAM, 2002, Pilastri fitt MA, 0
  TYPE=BEAM, 2003, Pilastri fitt MB, 0
  TYPE=BEAM, 2006, Pilastri fitt MA, 0
  TYPE=BEAM, 2007, Pilastri fitt MA, 0
  TYPE=BEAM, 2009, Pilastri fitt MA, 0
  TYPE=BEAM, 2010, Pilastri fitt MA, 0
  TYPE=BEAM, 2013, Pilastri fitt MA, 0
  TYPE=BEAM, 2014, Pilastri fitt MB, 0
  TYPE=BEAM, 2015, Pilastri fitt MA, 0
  TYPE=BEAM, 2016, Pilastri fitt MA, 0
  TYPE=BEAM, 2017, Pilastri fitt MA, 0
  TYPE=BEAM, 2018, Pilastri fitt MA, 0
  TYPE=BEAM, 6111, Maschi MA, 0
  TYPE=BEAM, 6113, Maschi MA, 0
  TYPE=BEAM, 6143, Fasce MB, 0
  TYPE=BEAM, 6145, Fasce MB, 0
  TYPE=BEAM, 6147, Fasce MB, 0
  TYPE=BEAM, 6148, Fasce MB, 0
  TYPE=BEAM, 6227, Fasce MA, 0
  TYPE=BEAM, 6230, Fasce MA, 0
  TYPE=BEAM, 6236, Fasce MA, 0
  TYPE=BEAM, 6276, Fasce MA, 0
  TYPE=BEAM, 6278, Fasce MA, 0
  TYPE=BEAM, 6279, Fasce MA, 0
  TYPE=BEAM, 6282, Fasce MA, 0
  TYPE=BEAM, 6283, Fasce MA, 0
  TYPE=BEAM, 6285, Fasce MA, 0
  TYPE=BEAM, 6288, Fasce MA, 0
  TYPE=BEAM, 6291, Fasce MA, 0
  TYPE=BEAM, 6292, Fasce MA, 0
  TYPE=BEAM, 6294, Fasce MA, 0

*PUSHOVER-LOAD   ; Pushover Load Cases
; NAME=NAME, DESC,                                      ; 1st line
; STEP, bUSEINILOAD, bPDELTA, METHOD, bREAC, bDISP  ; 2nd line
; CTRL_OPT, INC FUNCTION, ANAL RATIO                    ; 3rd line (METHOD=LOAD)
; CTRL_OPT, DISPL                                       ; 3rd line (METHOD=DISP, CTRL_OPT=
GLOBAL)
; CTRL_OPT, MNODE, DIR, DISPL                           ; 3rd line (METHOD=DISP, CTRL_OPT=
MNODE)
; bANAL_LIMIT, VALUE, LOAD_PATTERN                      ; 4th line
; DIR, SCALE                                            ; 5th line (LOAD_PATTERN=UNIFORM)
; MODE, SCALE                                           ; 5th line (LOAD_PATTERN=MODE)
; LCNAME1, SCALE1, LCNAME2, SCALE2, ...                 ; from 5th line (LOAD_PATTERN=STAT
IC)
   NAME=GU1 +X,
        300, YES, NO, DISP, YES, NO, NO, 20
        MNODE, 200, DX, 0.02
        NO, 10, STATIC, YES, NO, NO, 10, 10
        SISMA X, 1
   NAME=GU1 -X,
        200, YES, NO, DISP, YES, NO, NO, 20
        MNODE, 200, DX, -0.03
        NO, 10, STATIC, YES, NO, NO, 10, 10
        SISMA X, -1
   NAME=GU1 +Y,
        200, YES, NO, DISP, YES, NO, NO, 20
```

```
        MNODE, 200, DY, 0.03
        NO, 10, STATIC, YES, NO, NO, 10, 10
        SISMA Y, 1
   NAME=GU1 -Y,
        200, YES, NO, DISP, YES, NO, NO, 20
        MNODE, 200, DY, -0.03
        NO, 10, STATIC, YES, NO, NO, 10, 10
        SISMA Y, -1
   NAME=GU2 +X,
        300, YES, NO, DISP, YES, NO, NO, 20
        MNODE, 200, DX, 0.015
        NO, 10, UNIFORM, YES, NO, NO, 10, 10
        DX, 1
   NAME=GU2 -X,
        200, YES, NO, DISP, YES, NO, NO, 20
        MNODE, 200, DX, -0.03
        NO, 10, UNIFORM, YES, NO, NO, 10, 10
        DX, -1
   NAME=GU2 +Y,
        200, YES, NO, DISP, YES, NO, NO, 20
        MNODE, 200, DY, 0.03
        NO, 10, UNIFORM, YES, NO, NO, 10, 10
        DY, 1
   NAME=GU2 -Y,
        200, YES, NO, DISP, YES, NO, NO, 20
        MNODE, 200, DY, -0.03
        NO, 10, UNIFORM, YES, NO, NO, 10, 10
        DY, -1

*LOADCOMB    ; Combinations
; NAME=NAME, KIND, ACTIVE, bES, iTYPE, DESC, iSERV-TYPE, nLCOMTYPE   ; line 1
;      ANAL1, LCNAME1, FACT1, ...                                     ; from line 2
   NAME=SISMA V, CONC, STRENGTH, 0, 0, , 0, 0
        ST, PP, 1, ST, G1+G2 copertura A, 3.7, ST, G1+G2 copertura B, 1.5
        ST, Q sottotetto, 0.3, ST, sporto gronda, 2, ST, travi, 3
        ST, parapetto, 1.5, ST, muro, 4.6
   NAME=sisma_1, CONC, STRENGTH, 0, 0, , 0, 0
        RS, sisma_x, 1, RS, sisma_y, 0.3, ES, sisma_x, 1, ES, sisma_y, 0.3
        CBC, SISMA V, 1
   NAME=sisma_2, CONC, STRENGTH, 0, 0, , 0, 0
        RS, sisma_x, 1, RS, sisma_y, 0.3, ES, sisma_x, 1, ES, sisma_y, -0.3
        CBC, SISMA V, 1
   NAME=sisma_3, CONC, STRENGTH, 0, 0, , 0, 0
        RS, sisma_x, 1, RS, sisma_y, 0.3, ES, sisma_x, -1, ES, sisma_y, 0.3
        CBC, SISMA V, 1
   NAME=sisma_4, CONC, STRENGTH, 0, 0, , 0, 0
        RS, sisma_x, 1, RS, sisma_y, 0.3, ES, sisma_x, -1, ES, sisma_y, -0.3
        CBC, SISMA V, 1
   NAME=sisma_5, CONC, STRENGTH, 0, 0, , 0, 0
        RS, sisma_x, 1, RS, sisma_y, -0.3, ES, sisma_x, 1, ES, sisma_y, 0.3
        CBC, SISMA V, 1
   NAME=sisma_6, CONC, STRENGTH, 0, 0, , 0, 0
        RS, sisma_x, 1, RS, sisma_y, -0.3, ES, sisma_x, 1, ES, sisma_y, -0.3
        CBC, SISMA V, 1
   NAME=sisma_7, CONC, STRENGTH, 0, 0, , 0, 0
        RS, sisma_x, 1, RS, sisma_y, -0.3, ES, sisma_x, -1, ES, sisma_y, 0.3
        CBC, SISMA V, 1
   NAME=sisma_8, CONC, STRENGTH, 0, 0, , 0, 0
        RS, sisma_x, 1, RS, sisma_y, -0.3, ES, sisma_x, -1, ES, sisma_y, -0.3
        CBC, SISMA V, 1
   NAME=sisma_9, CONC, STRENGTH, 0, 0, , 0, 0
        RS, sisma_x, -1, RS, sisma_y, 0.3, ES, sisma_x, 1, ES, sisma_y, 0.3
```

```
     CBC, SISMA V, 1
NAME=sisma_10, CONC, STRENGTH, 0, 0, , 0, 0
     RS, sisma_x, -1, RS, sisma_y, 0.3, ES, sisma_x, 1, ES, sisma_y, -0.3
     CBC, SISMA V, 1
NAME=sisma_11, CONC, STRENGTH, 0, 0, , 0, 0
     RS, sisma_x, -1, RS, sisma_y, 0.3, ES, sisma_x, -1, ES, sisma_y, 0.3
     CBC, SISMA V, 1
NAME=sisma_12, CONC, STRENGTH, 0, 0, , 0, 0
     RS, sisma_x, -1, RS, sisma_y, 0.3, ES, sisma_x, -1, ES, sisma_y, -0.3
     CBC, SISMA V, 1
NAME=sisma_13, CONC, STRENGTH, 0, 0, , 0, 0
     RS, sisma_x, -1, RS, sisma_y, -0.3, ES, sisma_x, 1, ES, sisma_y, 0.3
     CBC, SISMA V, 1
NAME=sisma_14, CONC, STRENGTH, 0, 0, , 0, 0
     RS, sisma_x, -1, RS, sisma_y, -0.3, ES, sisma_x, 1, ES, sisma_y, -0.3
     CBC, SISMA V, 1
NAME=sisma_15, CONC, STRENGTH, 0, 0, , 0, 0
     RS, sisma_x, -1, RS, sisma_y, -0.3, ES, sisma_x, -1, ES, sisma_y, 0.3
     CBC, SISMA V, 1
NAME=sisma_16, CONC, STRENGTH, 0, 0, , 0, 0
     RS, sisma_x, -1, RS, sisma_y, -0.3, ES, sisma_x, -1, ES, sisma_y, -0.3
     CBC, SISMA V, 1
NAME=sisma_17, CONC, STRENGTH, 0, 0, , 0, 0
     RS, sisma_x, 0.3, RS, sisma_y, 1, ES, sisma_x, 0.3, ES, sisma_y, 1
     CBC, SISMA V, 1
NAME=sisma_18, CONC, STRENGTH, 0, 0, , 0, 0
     RS, sisma_x, 0.3, RS, sisma_y, 1, ES, sisma_x, -0.3, ES, sisma_y, 1
     CBC, SISMA V, 1
NAME=sisma_19, CONC, STRENGTH, 0, 0, , 0, 0
     RS, sisma_x, 0.3, RS, sisma_y, 1, ES, sisma_x, 0.3, ES, sisma_y, -1
     CBC, SISMA V, 1
NAME=sisma_20, CONC, STRENGTH, 0, 0, , 0, 0
     RS, sisma_x, 0.3, RS, sisma_y, 1, ES, sisma_x, -0.3, ES, sisma_y, -1
     CBC, SISMA V, 1
NAME=sisma 21, CONC, STRENGTH, 0, 0, , 0, 0
     RS, sisma_x, -0.3, RS, sisma_y, 1, ES, sisma_x, 0.3, ES, sisma_y, 1
     CBC, SISMA V, 1
NAME=sisma_22, CONC, STRENGTH, 0, 0, , 0, 0
     RS, sisma_x, -0.3, RS, sisma_y, 1, ES, sisma_x, -0.3, ES, sisma_y, 1
     CBC, SISMA V, 1
NAME=sisma 23, CONC, STRENGTH, 0, 0, , 0, 0
     RS, sisma_x, -0.3, RS, sisma_y, 1, ES, sisma_x, 0.3, ES, sisma_y, -1
     CBC, SISMA V, 1
NAME=sisma_24, CONC, STRENGTH, 0, 0, , 0, 0
     RS, sisma_x, -0.3, RS, sisma_y, 1, ES, sisma_x, -0.3, ES, sisma_y, -1
     CBC, SISMA V, 1
NAME=sisma_25, CONC, STRENGTH, 0, 0, , 0, 0
     RS, sisma_x, 0.3, RS, sisma_y, -1, ES, sisma_x, 0.3, ES, sisma_y, 1
     CBC, SISMA V, 1
NAME=sisma_26, CONC, STRENGTH, 0, 0, , 0, 0
     RS, sisma_x, 0.3, RS, sisma_y, -1, ES, sisma_x, -0.3, ES, sisma_y, 1
     CBC, SISMA V, 1
NAME=sisma_27, CONC, STRENGTH, 0, 0, , 0, 0
     RS, sisma_x, 0.3, RS, sisma_y, -1, ES, sisma_x, 0.3, ES, sisma_y, -1
     CBC, SISMA V, 1
NAME=sisma_28, CONC, STRENGTH, 0, 0, , 0, 0
     RS, sisma_x, 0.3, RS, sisma_y, -1, ES, sisma_x, -0.3, ES, sisma_y, -1
     CBC, SISMA V, 1
NAME=sisma_29, CONC, STRENGTH, 0, 0, , 0, 0
     RS, sisma_x, -0.3, RS, sisma_y, -1, ES, sisma_x, 0.3, ES, sisma_y, 1
     CBC, SISMA V, 1
NAME=sisma_30, CONC, STRENGTH, 0, 0, , 0, 0
```

```
        RS, sisma_x, -0.3, RS, sisma_y, -1, ES, sisma_x, -0.3, ES, sisma_y, 1
        CBC, SISMA V, 1
   NAME=sisma_31, CONC, STRENGTH, 0, 0, , 0, 0
        RS, sisma_x, -0.3, RS, sisma_y, -1, ES, sisma_x, 0.3, ES, sisma_y, -1
        CBC, SISMA V, 1
   NAME=sisma_32, CONC, STRENGTH, 0, 0, , 0, 0
        RS, sisma_x, -0.3, RS, sisma_y, -1, ES, sisma_x, -0.3, ES, sisma_y, -1
        CBC, SISMA V, 1
   NAME=ENVELOPE, CONC, SPECIAL, 0, 1, , 0, 0
        CBC, sisma_1, 1, CBC, sisma_2, 1, CBC, sisma_3, 1, CBC, sisma_4, 1
        CBC, sisma_5, 1, CBC, sisma_6, 1, CBC, sisma_7, 1, CBC, sisma_8, 1
        CBC, sisma_9, 1, CBC, sisma_10, 1, CBC, sisma_11, 1, CBC, sisma_12, 1
        CBC, sisma_13, 1, CBC, sisma_14, 1, CBC, sisma_15, 1, CBC, sisma_16, 1
        CBC, sisma_17, 1, CBC, sisma_18, 1, CBC, sisma_19, 1, CBC, sisma_20, 1
        CBC, sisma_21, 1, CBC, sisma_22, 1, CBC, sisma_23, 1, CBC, sisma_24, 1
        CBC, sisma_25, 1, CBC, sisma_26, 1, CBC, sisma_27, 1, CBC, sisma_28, 1
        CBC, sisma_29, 1, CBC, sisma_30, 1, CBC, sisma_31, 1, CBC, sisma_32, 1
   NAME=SLU, CONC, INACTIVE, 0, 0, , 0, 0
        ST, PP, 1.3, ST, G1+G2 copertura A, 4.81, ST, G1+G2 copertura B, 1.95
        ST, Q sottotetto, 0.75, ST, sporto gronda, 2.6, ST, Q neve, 1.86
        ST, travi, 3.9, ST, parapetto, 2.25, ST, muro, 5.98

*BLDG-CTRL    ; Building Control Data
; bBASE, LEVEL, bMASS, bSSFR, bSTORMDUL, bSRTH, iSRTHOPT, [EccenRatio], bLATFLEX ; lin
e 1
; LCNAME1, FACT1, LCNAME2, FACT2, ...                                              ; fro
m line 2
; [EccenRatio] : bCENTER
; bCENTER=NO
; [EccenRatio] : bCENTER, XDLC, YDLC, USE                                           ; bC
ENTER=YES, USE=MASS
; [EccenRatio] : bCENTER, XDLC, YDLC, USE                                          ; bCE
NTER=YES, USE=AXIAL
; [EccenRatio] : bCENTER, XDLC, YDLC, USE, SLCX, SLCY                              ; bCE
NTER=YES, USE=SHEAR
   YES, -1, YES, YES, NO, NO, 0, NO, , , AXIAL, YES

*LC-COLOR    ; Diagram Color for Load Case
; ANAL, LCNAME, iR1(ALL), iG1(ALL), iB1(ALL), iR2(MIN), iG2(MIN), iB2(MIN), iR3(MAX),
iG2(MAX), iB2(MAX)
 ST, parapetto, 0, 128, 57, 192, 0, 128, 192, 0, 128
 ST, PP, 78, 0, 255, 255, 160, 255, 163, 255, 160
 PO, GU1 +X, 210, 210, 210, 163, 160, 255, 192, 192, 192
 PO, GU1 -X, 255, 255, 255, 0, 192, 128, 255, 192, 87
 PO, GU1 +Y, 192, 0, 128, 255, 0, 192, 255, 160, 255
 CBC, SISMA V, 212, 160, 255, 148, 87, 255, 148, 87, 255
 CBC, sisma_1, 160, 192, 255, 255, 192, 160, 0, 128, 192
 PO, GU1 -Y, 0, 157, 192, 255, 160, 255, 93, 255, 87
 CBC, sisma_2, 255, 255, 87, 192, 0, 128, 255, 87, 128
 RS, sisma_x, 0, 128, 57, 192, 128, 0, 163, 255, 160
 ES, sisma_x, 0, 157, 192, 78, 0, 255, 163, 255, 160
 RS, sisma_y, 192, 0, 128, 163, 160, 255, 163, 255, 160
 ES, sisma_y, 192, 72, 0, 255, 87, 128, 210, 210, 210
 CBC, sisma_3, 0, 128, 57, 192, 72, 0, 192, 0, 128
 CBC, sisma_4, 160, 255, 255, 255, 160, 255, 163, 255, 160
 CBC, sisma_5, 0, 128, 192, 0, 192, 192, 163, 160, 255
 CBC, sisma_6, 255, 192, 87, 192, 128, 0, 255, 128, 0
 CBC, sisma_7, 0, 192, 192, 255, 0, 192, 255, 128, 0
 CBC, sisma_8, 146, 0, 255, 0, 128, 255, 255, 192, 87
 CBC, sisma_9, 78, 0, 255, 0, 192, 128, 128, 192, 0
 CBC, sisma_10, 192, 72, 0, 192, 128, 0, 255, 128, 0
 CBC, sisma_11, 255, 192, 160, 192, 0, 192, 0, 128, 57
```

```
 CBC, sisma_12, 192, 0, 128, 146, 0, 255, 255, 255, 255
 CBC, sisma_13, 255, 0, 128, 78, 0, 255, 212, 160, 255
 CBC, sisma_14, 255, 87, 87, 85, 192, 0, 146, 0, 255
 CBC, sisma_15, 0, 128, 128, 255, 160, 255, 255, 128, 0
 CBC, sisma_16, 163, 255, 160, 0, 128, 57, 160, 192, 255
 CBC, sisma_17, 192, 0, 192, 160, 192, 255, 192, 72, 0
 CBC, sisma_18, 148, 87, 255, 192, 0, 192, 255, 160, 255
 CBC, sisma_19, 0, 128, 192, 212, 160, 255, 0, 128, 128
 CBC, sisma_20, 192, 192, 0, 192, 0, 128, 78, 0, 255
 CBC, sisma_21, 0, 192, 128, 0, 128, 128, 255, 255, 87
 CBC, sisma_22, 78, 0, 255, 192, 128, 0, 192, 128, 0
 CBC, sisma_23, 255, 0, 128, 255, 128, 0, 0, 128, 57
 CBC, sisma_24, 192, 72, 0, 210, 210, 210, 163, 255, 160
 CBC, sisma_25, 192, 192, 0, 148, 87, 255, 0, 128, 255
 CBC, sisma_26, 146, 0, 255, 192, 0, 128, 0, 192, 128
 CBC, sisma_27, 163, 255, 160, 255, 255, 255, 78, 0, 255
 CBC, sisma_28, 148, 87, 255, 255, 255, 255, 85, 0, 192
 CBC, sisma_29, 255, 160, 255, 255, 192, 87, 85, 192, 0
 CBC, sisma_30, 192, 192, 192, 192, 192, 0, 192, 0, 192
 CBC, sisma_31, 85, 0, 192, 85, 0, 192, 255, 160, 255
 CBC, sisma_32, 78, 0, 255, 0, 128, 128, 128, 192, 0
 CBC, ENVELOPE, 163, 160, 255, 192, 192, 192, 160, 192, 255
 CBC, SLU, 163, 255, 160, 255, 255, 255, 192, 72, 0
 PO, GU2 +X, 160, 255, 255, 0, 192, 192, 255, 128, 0
 ST, G1+G2 copertura A, 163, 255, 160, 255, 255, 255, 255, 255, 87
 PO, GU2 -X, 192, 0, 128, 78, 0, 255, 255, 87, 128
 PO, GU2 +Y, 146, 0, 255, 85, 192, 0, 255, 192, 160
 ST, G1+G2 copertura B, 148, 87, 255, 192, 128, 0, 255, 255, 255
 PO, GU2 -Y, 255, 192, 160, 0, 128, 128, 255, 0, 192
 ST, muro, 163, 255, 160, 255, 192, 160, 85, 0, 192
 ST, Q sottotetto, 255, 192, 87, 255, 87, 87, 192, 0, 192
 ST, sporto gronda, 0, 192, 128, 146, 0, 255, 148, 87, 255
 ST, Q neve, 128, 192, 0, 255, 192, 87, 192, 72, 0
 ST, SISMA X, 255, 255, 87, 192, 128, 0, 192, 192, 0
 ST, SISMA Y, 255, 87, 87, 163, 255, 160, 0, 128, 57
 ST, travi, 160, 255, 255, 85, 192, 0, 160, 192, 255

*EIGEN-CTRL    ; Eigenvalue Analysis Control
; TYPE, iFREQ, iITER, iDIM, TOL, bMINMAX, FRMIN, FRMAX, bSTRUM   ; TYPE=EIGEN
; TYPE, bINCNL, iGNUM                                            ; TYPE=RITZ(line 1)
;       KIND1, CASE1/GROUND1, iNOG1, ...                         ; TYPE=RITZ(from line
2)
   LANCZOS, 96, 20, 1, 1e-010, NO, 0, 0, NO

*DGN-MATL    ; Modify Steel(Concrete) Material
; iMAT, TYPE, MNAME, [DATA1]                                    ; STEEL
; iMAT, TYPE, MNAME, [DATA2], [R-DATA], FCI, bSERV, SHORT, LONG ; CONC
; iMAT, TYPE, MNAME, [DATA3], [DATA2], [R-DATA]                 ; SRC
; iMAT, TYPE, MNAME, [DATA5]                                    ; STEEL(None) & KSCE-A
SD05
; [DATA1] : 1, DB, CODE, NAME or 2, ELAST, POISN, FU, FY1, FY2, FY3, FY4
;           FY5, FY6, AFT, AFT2, AFT3, FY, AFV, AFV2, AFV3
; [DATA2] : 1, DB, CODE, NAME or 2, FC, CHK, LAMBDA
; [DATA3] : 1, DB, CODE, NAME or 2, ELAST, FU, FY1, FY2, FY3, FY4
;              FY5, FY6, AFT, AFT2, AFT3, FY, AFV, AFV2, AFV3
; [DATA4] : 1, DB, CODE, NAME or 2, FC
; [DATA5] : 3, ELAST, POISN, AL1, AL2, AL3, AL4, AL5, AL6, AL7, AL8, AL9, AL10
;              MIN1, MIN2, MIN3
; [R-DATA]: RBCODE, RBMAIN, RBSUB, FY(R), FYS
    6, CONC , C16/20            , 1, EN04(RC)   ,            ,C16/20        , NO, 1, ,
 , , 0, 0, 11200, NO, 0, 0,            ,            ,              , 0, NO, 1, , , , 0
, 0, 0
```

**PROJECT TITLE :**

| | | | | |
|---|---|---|---|---|
| MIDAS | Company | | Client | |
| | Author | Nicola | File Name | US1A - scuola muscoline - VV - PO - 06.mgt |

*ENDDATA

**PROJECT TITLE :**

| | | | | |
|---|---|---|---|---|
| MIDAS | Company | | Client | |
| | Author | Nicola | File Name | US1A - scuola muscoline - VV - PO - 06.txt |

```
 ** midas Gen Pushover Curve Data **
_____________________________________________

[ Target Displacement ]
* Disp. Control Node : 200
* Direction : DX
* Load Pattern Type : Accerelation
* SLO- Demand, Capacity, Step, Remark : 0.004075, 0.003618, 34, N/A
* SLD- Demand, Capacity, Step, Remark : 0.004075, 0.005400, 34, OK
* SLV- Demand, Capacity, Step, Remark : 0.004075, -, 34, -
* SLC- Demand, Capacity, Step, Remark : 0.004075, -, 34, -
_____________________________________________

- Target Displacement of SLO
  m* = 309.325
  Gamma = 1
  Fy* = 903.909
  T* = 0.111656
  Se(T*) = 0.556276g
  det* = 0.00172261
  qu = 1.86669
  Tc = 0.44
  dt* = 0.00407454 (short period range)
  dt = 0.00407454

- Target Displacement of SLD
  m* = 309.325
  Gamma = 1
  Fy* = 903.909
  T* = 0.111656
  Se(T*) = 0.556276g
  det* = 0.00172261
  qu = 1.86669
  Tc = 0.44
  dt* = 0.00407454 (short period range)
  dt = 0.00407454

- Target Displacement of SLV
  m* = 309.325
  Gamma = 1
  Fy* = 903.909
  T* = 0.111656
  Se(T*) = 0.556276g
  det* = 0.00172261
  qu = 1.86669
  Tc = 0.44
  dt* = 0.00407454 (short period range)
  dt = 0.00407454

- Target Displacement of SLC
  m* = 309.325
  Gamma = 1
  Fy* = 903.909
  T* = 0.111656
  Se(T*) = 0.556276g
  det* = 0.00172261
  qu = 1.86669
  Tc = 0.44
  dt* = 0.00407454 (short period range)
  dt = 0.00407454
_____________________________________________

[ Spectral Displacement(Sd) vs. Spectral Acceleration(Sa) ]

Load Case :GU2 +X   Unit:  kN,m


 Node : 200   Direction : DX   Mode 5
```

**PROJECT TITLE :**

| | | | | |
|---|---|---|---|---|
| MIDAS | Company | | Client | |
| | Author | Nicola | File Name | US1A - scuola muscoline - VV - PO - 06.txt |

| Step<br>Status of Step | Spectral Displacement(Sd) | Spectral Acceleration(Sa) |
|---|---|---|
| 0 | 5.00000e-006 | 2.14214e-003 |
| 1 | 5.00000e-005 | 2.14214e-002 |
| 2 | 1.00000e-004 | 4.28427e-002 |
| 3 | 1.50000e-004 | 6.42641e-002 |
| 4 | 2.00000e-004 | 8.29387e-002 |
| 5 | 2.50000e-004 | 9.90205e-002 |
| 6 | 3.00000e-004 | 1.13216e-001 |
| 7 | 3.50000e-004 | 1.27216e-001 |
| 8 | 4.00000e-004 | 1.41215e-001 |
| 9 | 4.50000e-004 | 1.55215e-001 |
| 10 | 5.00000e-004 | 1.68592e-001 |
| 11 | 5.50000e-004 | 1.80042e-001 |
| 12 | 6.00000e-004 | 1.90573e-001 |
| 13 | 6.50000e-004 | 2.00998e-001 |
| 14 | 7.00000e-004 | 2.09189e-001 |
| 15 | 7.50000e-004 | 2.15814e-001 |
| 16 | 8.00000e-004 | 2.22438e-001 |
| 17 | 8.50000e-004 | 2.28050e-001 |
| 18 | 9.00000e-004 | 2.33414e-001 |
| 19 | 9.50000e-004 | 2.38097e-001 |
| 20 | 1.00000e-003 | 2.42680e-001 |
| 21 | 1.05000e-003 | 2.46894e-001 |
| 22 | 1.10000e-003 | 2.50640e-001 |
| 23 | 1.15000e-003 | 2.52788e-001 |
| 24 | 1.20000e-003 | 2.54709e-001 |
| 25 | 1.25000e-003 | 2.56557e-001 |
| 26 | 1.30000e-003 | 2.58405e-001 |
| 27 | 1.35000e-003 | 2.60253e-001 |
| 28 | 1.40000e-003 | 2.62101e-001 |
| 29 | 1.45000e-003 | 2.63949e-001 |
| 30 | 1.50000e-003 | 2.65797e-001 |
| 31 | 1.55000e-003 | 2.67645e-001 |

**PROJECT TITLE :**

| | Company | | Client | |
|---|---|---|---|---|
| MIDAS | Author | Nicola | File Name | US1A - scuola muscoline - VV - PO - 06.txt |

```
                32            1.60000e-003                                2.69331e-001

                33            1.65000e-003                                2.70675e-001

                34            1.70000e-003                                2.72018e-001  SLO(Dem
.)SLD(Dem.)SLV(Dem.)SLC(Dem.)
                35            1.75000e-003                                2.73292e-001

                36            1.80000e-003                                2.74536e-001

                37            1.85000e-003                                2.75779e-001

                38            1.90000e-003                                2.77023e-001

                39            1.95000e-003                                2.78267e-001

                40            2.00000e-003                                2.79510e-001

                41            2.05000e-003                                2.80754e-001

                42            2.10000e-003                                2.81888e-001

                43            2.15000e-003                                2.82867e-001

                44            2.20000e-003                                2.83819e-001

                45            2.25000e-003                                2.84624e-001

                46            2.30000e-003                                2.85384e-001

                47            2.35000e-003                                2.86143e-001

                48            2.40000e-003                                2.86903e-001

                49            2.45000e-003                                2.87663e-001

                50            2.50000e-003                                2.88422e-001

                51            2.55000e-003                                2.89182e-001

                52            2.60000e-003                                2.89700e-001

                53            2.65000e-003                                2.90217e-001

                54            2.70000e-003                                2.90735e-001

                55            2.75000e-003                                2.91252e-001

                56            2.80000e-003                                2.91769e-001

                57            2.85000e-003                                2.92287e-001

                58            2.90000e-003                                2.92804e-001

                59            2.95000e-003                                2.93321e-001

                60            3.00000e-003                                2.93839e-001

                61            3.05000e-003                                2.94348e-001

                62            3.10000e-003                                2.94845e-001

                63            3.15000e-003                                2.95341e-001

                64            3.20000e-003                                2.95777e-001

                65            3.25000e-003                                2.96161e-001

                66            3.30000e-003                                2.96513e-001
```

**PROJECT TITLE :**

| | Company | | Client | |
|---|---|---|---|---|
| MIDAS | Author | Nicola | File Name | US1A - scuola muscoline - VV - PO - 06.txt |

| | | |
|---|---|---|
| 67 | 3.35000e-003 | 2.96864e-001 |
| 68 | 3.40000e-003 | 2.97216e-001 |
| 69 | 3.45000e-003 | 2.97558e-001 |
| 70 | 3.50000e-003 | 2.97899e-001 |
| 71 | 3.55000e-003 | 2.98239e-001 |
| 72 | 3.60000e-003 | 2.98580e-001 |
| 73 | 3.65000e-003 | 2.98921e-001 |
| 74 | 3.70000e-003 | 2.99261e-001 |
| 75 | 3.75000e-003 | 2.99602e-001 |
| 76 | 3.80000e-003 | 2.99943e-001 |
| 77 | 3.85000e-003 | 3.00283e-001 |
| 78 | 3.90000e-003 | 3.00624e-001 |
| 79 | 3.95000e-003 | 3.00965e-001 |
| 80 | 4.00000e-003 | 3.01305e-001 |
| 81 | 4.05000e-003 | 3.01646e-001 |
| 82 | 4.10000e-003 | 3.01986e-001 |
| 83 | 4.15000e-003 | 3.02327e-001 |
| 84 | 4.20000e-003 | 3.02668e-001 |
| 85 | 4.25000e-003 | 3.02978e-001 |
| 86 | 4.30000e-003 | 3.03208e-001 |
| 87 | 4.35000e-003 | 3.03438e-001 |
| 88 | 4.40000e-003 | 3.03668e-001 |
| 89 | 4.45000e-003 | 3.03898e-001 |
| 90 | 4.50000e-003 | 3.04128e-001 |
| 91 | 4.55000e-003 | 3.04358e-001 |
| 92 | 4.60000e-003 | 3.04588e-001 |
| 93 | 4.65000e-003 | 3.04818e-001 |
| 94 | 4.70000e-003 | 3.05047e-001 |
| 95 | 4.75000e-003 | 3.05277e-001 |
| 96 | 4.80000e-003 | 3.05507e-001 |
| 97 | 4.85000e-003 | 3.05724e-001 |
| 98 | 4.90000e-003 | 3.05921e-001 |
| 99 | 4.95000e-003 | 3.06118e-001 |
| 100 | 5.00000e-003 | 3.06315e-001 |

| | | |
|---|---|---|
| 101 | 5.05000e-003 | 3.06495e-001 |
| 102 | 5.10000e-003 | 3.06669e-001 |
| 103 | 5.15000e-003 | 3.06842e-001 |
| 104 | 5.20000e-003 | 3.07015e-001 |
| 105 | 5.25000e-003 | 3.07189e-001 |
| 106 | 5.30000e-003 | 3.07362e-001 |
| 107 | 5.35000e-003 | 3.07523e-001 |
| 108 | 5.40000e-003 | 3.07673e-001 |
| SLD(Cap.) | | |
| 109 | 5.45000e-003 | 3.04410e-001 |
| 110 | 5.50000e-003 | 3.04551e-001 |
| 111 | 5.55000e-003 | 3.04687e-001 |
| 112 | 5.60000e-003 | 3.04812e-001 |
| 113 | 5.65000e-003 | 3.04937e-001 |
| 114 | 5.70000e-003 | 3.05062e-001 |
| 115 | 5.75000e-003 | 3.05180e-001 |
| 116 | 5.80000e-003 | 3.05297e-001 |
| 117 | 5.85000e-003 | 3.05414e-001 |
| 118 | 5.90000e-003 | 3.05530e-001 |
| 119 | 5.95000e-003 | 3.02215e-001 |
| 120 | 6.00000e-003 | 3.02338e-001 |
| 121 | 6.05000e-003 | 3.02461e-001 |
| 122 | 6.10000e-003 | 3.02585e-001 |
| 123 | 6.15000e-003 | 3.02708e-001 |
| 124 | 6.20000e-003 | 3.02831e-001 |
| 125 | 6.25000e-003 | 3.02948e-001 |
| 126 | 6.30000e-003 | 3.03061e-001 |
| 127 | 6.35000e-003 | 3.03173e-001 |
| 128 | 6.40000e-003 | 3.03285e-001 |
| 129 | 6.45000e-003 | 3.03397e-001 |
| 130 | 6.50000e-003 | 3.03510e-001 |
| 131 | 6.55000e-003 | 3.03622e-001 |
| 132 | 6.60000e-003 | 3.00322e-001 |
| 133 | 6.65000e-003 | 3.00435e-001 |
| 134 | 6.70000e-003 | 3.00546e-001 |
| 135 | 6.75000e-003 | 3.00647e-001 |

| | | |
|---|---|---|
| 136 | 6.80000e-003 | 3.00749e-001 |
| 137 | 6.85000e-003 | 3.00839e-001 |
| 138 | 6.90000e-003 | 3.00928e-001 |
| 139 | 6.95000e-003 | 3.01016e-001 |
| 140 | 7.00000e-003 | 3.01104e-001 |
| 141 | 7.05000e-003 | 3.01177e-001 |
| 142 | 7.10000e-003 | 3.01233e-001 |
| 143 | 7.15000e-003 | 3.01288e-001 |
| 144 | 7.20000e-003 | 3.01340e-001 |
| 145 | 7.25000e-003 | 3.01380e-001 |
| 146 | 7.30000e-003 | 3.01419e-001 |
| 147 | 7.35000e-003 | 3.01457e-001 |
| 148 | 7.40000e-003 | 3.01496e-001 |
| 149 | 7.45000e-003 | 3.01534e-001 |
| 150 | 7.50000e-003 | 3.01573e-001 |
| 151 | 7.55000e-003 | 3.01611e-001 |
| 152 | 7.60000e-003 | 3.01650e-001 |
| 153 | 7.65000e-003 | 3.01689e-001 |
| 154 | 7.70000e-003 | 3.01727e-001 |
| 155 | 7.75000e-003 | 3.01766e-001 |
| 156 | 7.80000e-003 | 3.01802e-001 |
| 157 | 7.85000e-003 | 3.01836e-001 |
| 158 | 7.90000e-003 | 3.01869e-001 |
| 159 | 7.95000e-003 | 3.01902e-001 |
| 160 | 8.00000e-003 | 3.01935e-001 |
| 161 | 8.05000e-003 | 3.01968e-001 |
| 162 | 8.10000e-003 | 3.02002e-001 |
| 163 | 8.15000e-003 | 3.02035e-001 |
| 164 | 8.20000e-003 | 3.02068e-001 |
| 165 | 8.25000e-003 | 3.02081e-001 |
| 166 | 8.30000e-003 | 3.02092e-001 |
| 167 | 8.35000e-003 | 3.02102e-001 |
| 168 | 8.40000e-003 | 3.02113e-001 |
| 169 | 8.45000e-003 | 3.02124e-001 |

**PROJECT TITLE :**

| | Company | | Client | |
|---|---|---|---|---|
| MIDAS | Author | Nicola | File Name | US1A - scuola muscoline - VV - PO - 06.txt |

| | | |
|---|---|---|
| 170 | 8.50000e-003 | 3.02134e-001 |
| 171 | 8.55000e-003 | 3.02145e-001 |
| 172 | 8.60000e-003 | 3.02155e-001 |
| 173 | 8.65000e-003 | 3.02166e-001 |
| 174 | 8.70000e-003 | 3.02176e-001 |
| 175 | 8.75000e-003 | 3.02187e-001 |
| 176 | 8.80000e-003 | 3.02198e-001 |
| 177 | 8.85000e-003 | 3.02208e-001 |
| 178 | 8.90000e-003 | 3.02219e-001 |
| 179 | 8.95000e-003 | 3.02229e-001 |
| 180 | 9.00000e-003 | 3.02240e-001 |
| 181 | 9.05000e-003 | 3.02251e-001 |
| 182 | 9.10000e-003 | 3.02261e-001 |
| 183 | 9.15000e-003 | 3.02272e-001 |
| 184 | 9.20000e-003 | 3.02282e-001 |
| 185 | 9.25000e-003 | 3.02293e-001 |
| 186 | 9.30000e-003 | 3.02304e-001 |
| 187 | 9.35000e-003 | 3.02314e-001 |
| 188 | 9.40000e-003 | 3.02325e-001 |
| 189 | 9.45000e-003 | 3.02335e-001 |
| 190 | 9.50000e-003 | 3.02346e-001 |
| 191 | 9.55000e-003 | 3.02356e-001 |
| 192 | 9.60000e-003 | 3.02367e-001 |
| 193 | 9.65000e-003 | 3.02378e-001 |
| 194 | 9.70000e-003 | 3.02388e-001 |
| 195 | 9.75000e-003 | 3.02399e-001 |
| 196 | 9.80000e-003 | 3.02409e-001 |
| 197 | 9.85000e-003 | 3.02420e-001 |
| 198 | 9.90000e-003 | 3.02430e-001 |
| 199 | 9.95000e-003 | 3.02441e-001 |
| 200 | 1.00000e-002 | 3.02452e-001 |
| 201 | 1.00500e-002 | 3.02462e-001 |
| 202 | 1.01000e-002 | 3.02473e-001 |
| 203 | 1.01500e-002 | 3.02483e-001 |
| 204 | 1.02000e-002 | 3.02494e-001 |

**PROJECT TITLE :**

| | | | | |
|---|---|---|---|---|
| MIDAS | Company | | Client | |
| | Author | Nicola | File Name | US1A - scuola muscoline - VV - PO - 06.txt |

| | | |
|---|---|---|
| 205 | 1.02500e-002 | 3.02505e-001 |
| 206 | 1.03000e-002 | 3.02515e-001 |
| 207 | 1.03500e-002 | 3.02525e-001 |
| 208 | 1.04000e-002 | 3.02533e-001 |
| 209 | 1.04500e-002 | 3.02542e-001 |
| 210 | 1.05000e-002 | 3.02551e-001 |
| 211 | 1.05500e-002 | 3.02560e-001 |
| 212 | 1.06000e-002 | 3.02569e-001 |
| 213 | 1.06500e-002 | 3.02577e-001 |
| 214 | 1.07000e-002 | 3.02586e-001 |
| 215 | 1.07500e-002 | 3.02595e-001 |
| 216 | 1.08000e-002 | 3.02604e-001 |
| 217 | 1.08500e-002 | 3.02613e-001 |
| 218 | 1.09000e-002 | 3.02621e-001 |
| 219 | 1.09500e-002 | 3.02630e-001 |
| 220 | 1.10000e-002 | 3.02639e-001 |
| 221 | 1.10500e-002 | 3.02648e-001 |
| 222 | 1.11000e-002 | 3.02657e-001 |
| 223 | 1.11500e-002 | 3.02665e-001 |
| 224 | 1.12000e-002 | 3.02674e-001 |
| 225 | 1.12500e-002 | 3.02683e-001 |
| 226 | 1.13000e-002 | 3.02692e-001 |
| 227 | 1.13500e-002 | 3.02701e-001 |
| 228 | 1.14000e-002 | 3.02709e-001 |
| 229 | 1.14500e-002 | 3.02718e-001 |
| 230 | 1.15000e-002 | 3.02727e-001 |
| 231 | 1.15500e-002 | 3.02736e-001 |
| 232 | 1.16000e-002 | 3.02745e-001 |
| 233 | 1.16500e-002 | 3.02753e-001 |
| 234 | 1.17000e-002 | 3.02762e-001 |
| 235 | 1.17500e-002 | 3.02771e-001 |
| 236 | 1.18000e-002 | 3.02780e-001 |
| 237 | 1.18500e-002 | 3.02789e-001 |
| 238 | 1.19000e-002 | 3.02797e-001 |

**PROJECT TITLE :**

| | | | | |
|---|---|---|---|---|
| MIDAS | Company | | Client | |
| | Author | Nicola | File Name | US1A - scuola muscoline - VV - PO - 06.txt |

| | | |
|---|---|---|
| 239 | 1.19500e-002 | 3.02806e-001 |
| 240 | 1.20000e-002 | 3.02815e-001 |
| 241 | 1.20500e-002 | 3.02824e-001 |
| 242 | 1.21000e-002 | 3.02833e-001 |
| 243 | 1.21500e-002 | 3.02841e-001 |
| 244 | 1.22000e-002 | 3.02850e-001 |
| 245 | 1.22500e-002 | 3.02859e-001 |
| 246 | 1.23000e-002 | 3.02868e-001 |
| 247 | 1.23500e-002 | 3.02877e-001 |
| 248 | 1.24000e-002 | 3.02883e-001 |
| 249 | 1.24500e-002 | 3.02889e-001 |
| 250 | 1.25000e-002 | 3.02895e-001 |
| 251 | 1.25500e-002 | 3.02901e-001 |
| 252 | 1.26000e-002 | 3.02906e-001 |
| 253 | 1.26500e-002 | 3.02911e-001 |
| 254 | 1.27000e-002 | 3.02917e-001 |
| 255 | 1.27500e-002 | 3.02922e-001 |
| 256 | 1.28000e-002 | 3.02927e-001 |
| 257 | 1.28500e-002 | 3.02932e-001 |
| 258 | 1.29000e-002 | 3.02938e-001 |
| 259 | 1.29500e-002 | 3.02943e-001 |
| 260 | 1.30000e-002 | 3.02948e-001 |
| 261 | 1.30500e-002 | 3.02953e-001 |
| 262 | 1.31000e-002 | 3.02959e-001 |
| 263 | 1.31500e-002 | 3.02964e-001 |
| 264 | 1.32000e-002 | 3.02969e-001 |
| 265 | 1.32500e-002 | 3.02974e-001 |
| 266 | 1.33000e-002 | 3.02980e-001 |
| 267 | 1.33500e-002 | 3.02985e-001 |
| 268 | 1.34000e-002 | 3.02990e-001 |
| 269 | 1.34500e-002 | 3.02996e-001 |
| 270 | 1.35000e-002 | 3.03001e-001 |
| 271 | 1.35500e-002 | 3.03006e-001 |
| 272 | 1.36000e-002 | 3.03011e-001 |
| 273 | 1.36500e-002 | 3.03017e-001 |

**PROJECT TITLE :**

| | Company | | Client | |
|---|---|---|---|---|
| MIDAS | Author | Nicola | File Name | US1A - scuola muscoline - VV - PO - 06.txt |

| | | |
|---|---|---|
| 274 | 1.37000e-002 | 3.03022e-001 |
| 275 | 1.37500e-002 | 3.03027e-001 |
| 276 | 1.38000e-002 | 3.03032e-001 |
| 277 | 1.38500e-002 | 3.03038e-001 |
| 278 | 1.39000e-002 | 3.03043e-001 |
| 279 | 1.39500e-002 | 3.03048e-001 |
| 280 | 1.40000e-002 | 3.03053e-001 |
| 281 | 1.40500e-002 | 3.03059e-001 |
| 282 | 1.41000e-002 | 3.03064e-001 |
| 283 | 1.41500e-002 | 3.03069e-001 |
| 284 | 1.42000e-002 | 3.03075e-001 |
| 285 | 1.42500e-002 | 3.03080e-001 |
| 286 | 1.43000e-002 | 3.03085e-001 |
| 287 | 1.43500e-002 | 3.03090e-001 |
| 288 | 1.44000e-002 | 3.03096e-001 |
| 289 | 1.44500e-002 | 3.03101e-001 |
| 290 | 1.45000e-002 | 3.03106e-001 |
| 291 | 1.45500e-002 | 3.03111e-001 |
| 292 | 1.46000e-002 | 1.80347e-001 |
| 293 | 1.46500e-002 | 1.81834e-001 |
| 294 | 1.47000e-002 | 1.82744e-001 |
| 295 | 1.47500e-002 | 6.23111e-003 |
| 296 | 1.48000e-002 | 6.67032e-003 |
| 297 | 1.48500e-002 | 9.58871e-003 |
| 298 | 1.49000e-002 | 1.30552e-002 |
| 299 | 1.49500e-002 | 1.88228e-002 |
| 300 | 1.50000e-002 | 1.97080e-003 |
| Min : | 1.50000e-002 | 1.97080e-003 |
| Max : | 5.40000e-003 | 3.07673e-001 |

**PROJECT TITLE :**

| | | | | |
|---|---|---|---|---|
| MIDAS | Company | | Client | |
| | Author | Nicola | File Name | US1A - scuola muscoline - VV - PO - 06.txt |

```
 ** midas Gen Pushover Curve Data **
_____________________________________________

[ Target Displacement ]
* Disp. Control Node : 200
* Direction : DX
* Load Pattern Type : Accerelation
* SLO- Demand, Capacity, Step, Remark : 0.004418, 0.004422, 12, OK
* SLD- Demand, Capacity, Step, Remark : 0.004418, 0.006600, 12, OK
* SLV- Demand, Capacity, Step, Remark : 0.004418, -, 12, -
* SLC- Demand, Capacity, Step, Remark : 0.004418, -, 12, -
_____________________________________________

- Target Displacement of SLO
  m* = 309.325
  Gamma = 1
  Fy* = 799.31
  T* = 0.112035
  Se(T*) = 0.557272g
  det* = 0.00173742
  qu = 2.11475
  Tc = 0.44
  dt* = 0.00441842 (short period range)
  dt = 0.00441842

- Target Displacement of SLD
  m* = 309.325
  Gamma = 1
  Fy* = 799.31
  T* = 0.112035
  Se(T*) = 0.557272g
  det* = 0.00173742
  qu = 2.11475
  Tc = 0.44
  dt* = 0.00441842 (short period range)
  dt = 0.00441842

- Target Displacement of SLV
  m* = 309.325
  Gamma = 1
  Fy* = 799.31
  T* = 0.112035
  Se(T*) = 0.557272g
  det* = 0.00173742
  qu = 2.11475
  Tc = 0.44
  dt* = 0.00441842 (short period range)
  dt = 0.00441842

- Target Displacement of SLC
  m* = 309.325
  Gamma = 1
  Fy* = 799.31
  T* = 0.112035
  Se(T*) = 0.557272g
  det* = 0.00173742
  qu = 2.11475
  Tc = 0.44
  dt* = 0.00441842 (short period range)
  dt = 0.00441842
_____________________________________________

[ Spectral Displacement(Sd) vs. Spectral Acceleration(Sa) ]

Load Case :GU2 -X   Unit:  kN,m


 Node : 200   Direction : DX   Mode 5
```

**PROJECT TITLE :**

| | | | | |
|---|---|---|---|---|
| MIDAS | Company | | Client | |
| | Author | Nicola | File Name | US1A - scuola muscoline - VV - PO - 06.txt |

| Step | Spectral Displacement(Sd) | Spectral Acceleration(Sa) | Status of Step |
|---|---|---|---|
| 0 | 1.50000e-005 | 6.21678e-003 | |
| 1 | 1.50000e-004 | 6.21678e-002 | |
| 2 | 3.00000e-004 | 1.09945e-001 | |
| 3 | 4.50000e-004 | 1.54380e-001 | |
| 4 | 6.00000e-004 | 1.80628e-001 | |
| 5 | 7.50000e-004 | 1.97977e-001 | |
| 6 | 9.00000e-004 | 2.12073e-001 | |
| 7 | 1.05000e-003 | 2.20250e-001 | |
| 8 | 1.20000e-003 | 2.27306e-001 | |
| 9 | 1.35000e-003 | 2.34156e-001 | |
| 10 | 1.50000e-003 | 2.39946e-001 | |
| 11 | 1.65000e-003 | 2.43943e-001 | |
| 12 | 1.80000e-003 | 2.47080e-001 | SLO(Dem.)SLD(Dem.)SLV(Dem.)SLC(Dem.) |
| 13 | 1.95000e-003 | 2.50183e-001 | |
| 14 | 2.10000e-003 | 2.53116e-001 | |
| 15 | 2.25000e-003 | 2.55198e-001 | |
| 16 | 2.40000e-003 | 2.56980e-001 | |
| 17 | 2.55000e-003 | 2.58346e-001 | |
| 18 | 2.70000e-003 | 2.59689e-001 | |
| 19 | 2.85000e-003 | 2.61032e-001 | |
| 20 | 3.00000e-003 | 2.62229e-001 | |
| 21 | 3.15000e-003 | 2.63344e-001 | |
| 22 | 3.30000e-003 | 2.64380e-001 | |
| 23 | 3.45000e-003 | 2.65300e-001 | |
| 24 | 3.60000e-003 | 2.66119e-001 | |
| 25 | 3.75000e-003 | 2.66938e-001 | |
| 26 | 3.90000e-003 | 2.67757e-001 | |
| 27 | 4.05000e-003 | 2.68557e-001 | |
| 28 | 4.20000e-003 | 2.69353e-001 | |
| 29 | 4.35000e-003 | 2.70149e-001 | |
| 30 | 4.50000e-003 | 2.70944e-001 | |
| 31 | 4.65000e-003 | 2.71740e-001 | |

| | | | |
|---|---|---|---|
| | 32 | 4.80000e-003 | 2.72536e-001 |
| | 33 | 4.95000e-003 | 2.73332e-001 |
| | 34 | 5.10000e-003 | 2.74119e-001 |
| | 35 | 5.25000e-003 | 2.74595e-001 |
| | 36 | 5.40000e-003 | 2.75015e-001 |
| | 37 | 5.55000e-003 | 2.75365e-001 |
| | 38 | 5.70000e-003 | 2.75707e-001 |
| | 39 | 5.85000e-003 | 2.76012e-001 |
| | 40 | 6.00000e-003 | 2.76318e-001 |
| | 41 | 6.15000e-003 | 2.76623e-001 |
| | 42 | 6.30000e-003 | 2.76929e-001 |
| | 43 | 6.45000e-003 | 2.77171e-001 |
| | 44 | 6.60000e-003 | 2.77395e-001 |
| SLD(Cap.) | 45 | 6.75000e-003 | 2.74115e-001 |
| | 46 | 6.90000e-003 | 2.74341e-001 |
| | 47 | 7.05000e-003 | 2.74511e-001 |
| | 48 | 7.20000e-003 | 2.74681e-001 |
| | 49 | 7.35000e-003 | 2.74850e-001 |
| | 50 | 7.50000e-003 | 2.75004e-001 |
| | 51 | 7.65000e-003 | 2.75112e-001 |
| | 52 | 7.80000e-003 | 2.75202e-001 |
| | 53 | 7.95000e-003 | 2.75282e-001 |
| | 54 | 8.10000e-003 | 2.75362e-001 |
| | 55 | 8.25000e-003 | 2.75441e-001 |
| | 56 | 8.40000e-003 | 2.72123e-001 |
| | 57 | 8.55000e-003 | 2.72202e-001 |
| | 58 | 8.70000e-003 | 2.72282e-001 |
| | 59 | 8.85000e-003 | 2.72362e-001 |
| | 60 | 9.00000e-003 | 2.72439e-001 |
| | 61 | 9.15000e-003 | 2.72512e-001 |
| | 62 | 9.30000e-003 | 2.72584e-001 |
| | 63 | 9.45000e-003 | 2.72652e-001 |
| | 64 | 9.60000e-003 | 2.72720e-001 |
| | 65 | 9.75000e-003 | 2.72788e-001 |
| | 66 | 9.90000e-003 | 2.72856e-001 |

**PROJECT TITLE :**

| | Company | | Client | |
|---|---|---|---|---|
| MIDAS | Author | Nicola | File Name | US1A - scuola muscoline - VV - PO - 06.txt |

| | | |
|---|---|---|
| 67 | 1.00500e-002 | 2.72923e-001 |
| 68 | 1.02000e-002 | 2.72989e-001 |
| 69 | 1.03500e-002 | 2.69659e-001 |
| 70 | 1.05000e-002 | 2.66451e-001 |
| 71 | 1.06500e-002 | 2.66599e-001 |
| 72 | 1.08000e-002 | 2.66747e-001 |
| 73 | 1.09500e-002 | 2.66853e-001 |
| 74 | 1.11000e-002 | 2.66910e-001 |
| 75 | 1.12500e-002 | 2.66959e-001 |
| 76 | 1.14000e-002 | 2.67008e-001 |
| 77 | 1.15500e-002 | 2.67057e-001 |
| 78 | 1.17000e-002 | 2.67106e-001 |
| 79 | 1.18500e-002 | 2.67155e-001 |
| 80 | 1.20000e-002 | 2.67204e-001 |
| 81 | 1.21500e-002 | 2.67253e-001 |
| 82 | 1.23000e-002 | 2.67302e-001 |
| 83 | 1.24500e-002 | 2.67351e-001 |
| 84 | 1.26000e-002 | 2.67397e-001 |
| 85 | 1.27500e-002 | 2.67436e-001 |
| 86 | 1.29000e-002 | 2.67474e-001 |
| 87 | 1.30500e-002 | 2.67513e-001 |
| 88 | 1.32000e-002 | 2.67551e-001 |
| 89 | 1.33500e-002 | 2.67590e-001 |
| 90 | 1.35000e-002 | 2.64883e-001 |
| 91 | 1.36500e-002 | 2.64973e-001 |
| 92 | 1.38000e-002 | 2.65011e-001 |
| 93 | 1.39500e-002 | 2.65049e-001 |
| 94 | 1.41000e-002 | 2.65088e-001 |
| 95 | 1.42500e-002 | 2.65126e-001 |
| 96 | 1.44000e-002 | 2.65165e-001 |
| 97 | 1.45500e-002 | 2.65203e-001 |
| 98 | 1.47000e-002 | 2.54673e-001 |
| 99 | 1.48500e-002 | 2.54378e-001 |
| 100 | 1.50000e-002 | 2.37047e-001 |

**PROJECT TITLE :**

| | | | | |
|---|---|---|---|---|
| MIDAS | Company | | Client | |
| | Author | Nicola | File Name | US1A - scuola muscoline - VV - PO - 06.txt |

| | | |
|---|---|---|
| 101 | 1.51500e-002 | 2.37171e-001 |
| 102 | 1.53000e-002 | 2.37295e-001 |
| 103 | 1.54500e-002 | 2.37419e-001 |
| 104 | 1.56000e-002 | 2.37486e-001 |
| 105 | 1.57500e-002 | 2.37515e-001 |
| 106 | 1.59000e-002 | 2.37544e-001 |
| 107 | 1.60500e-002 | 2.37572e-001 |
| 108 | 1.62000e-002 | 2.37242e-001 |
| 109 | 1.63500e-002 | 2.07081e-001 |
| 110 | 1.65000e-002 | 2.07169e-001 |
| 111 | 1.66500e-002 | 2.07256e-001 |
| 112 | 1.68000e-002 | 2.07343e-001 |
| 113 | 1.69500e-002 | 2.07430e-001 |
| 114 | 1.71000e-002 | 2.07517e-001 |
| 115 | 1.72500e-002 | 2.07603e-001 |
| 116 | 1.74000e-002 | 2.07690e-001 |
| 117 | 1.75500e-002 | 2.07777e-001 |
| 118 | 1.77000e-002 | 1.83273e-001 |
| 119 | 1.78500e-002 | 1.84365e-001 |
| 120 | 1.80000e-002 | 1.84421e-001 |
| 121 | 1.81500e-002 | 1.84477e-001 |
| 122 | 1.83000e-002 | 1.84533e-001 |
| 123 | 1.84500e-002 | 1.84589e-001 |
| 124 | 1.86000e-002 | 1.84646e-001 |
| 125 | 1.87500e-002 | 1.84702e-001 |
| 126 | 1.89000e-002 | 1.84758e-001 |
| 127 | 1.90500e-002 | 1.84814e-001 |
| 128 | 1.92000e-002 | 1.84870e-001 |
| 129 | 1.93500e-002 | 1.84926e-001 |
| 130 | 1.95000e-002 | 1.84982e-001 |
| 131 | 1.96500e-002 | 1.85039e-001 |
| 132 | 1.98000e-002 | 1.85072e-001 |
| 133 | 1.99500e-002 | 1.85075e-001 |
| 134 | 2.01000e-002 | 1.85079e-001 |
| 135 | 2.02500e-002 | 1.85083e-001 |

**PROJECT TITLE :**

| | | | | |
|---|---|---|---|---|
| MIDAS | Company | | Client | |
| | Author | Nicola | File Name | US1A - scuola muscoline - VV - PO - 06.txt |

| | | |
|---|---|---|
| 136 | 2.04000e-002 | 1.85086e-001 |
| 137 | 2.05500e-002 | 1.83576e-001 |
| 138 | 2.07000e-002 | 1.83591e-001 |
| 139 | 2.08500e-002 | 1.83606e-001 |
| 140 | 2.10000e-002 | 1.83621e-001 |
| 141 | 2.11500e-002 | 1.83636e-001 |
| 142 | 2.13000e-002 | 1.83650e-001 |
| 143 | 2.14500e-002 | 1.83665e-001 |
| 144 | 2.16000e-002 | 1.83680e-001 |
| 145 | 2.17500e-002 | 1.83695e-001 |
| 146 | 2.19000e-002 | 1.83710e-001 |
| 147 | 2.20500e-002 | 1.83725e-001 |
| 148 | 2.22000e-002 | 1.83740e-001 |
| 149 | 2.23500e-002 | 1.83755e-001 |
| 150 | 2.25000e-002 | 1.83770e-001 |
| 151 | 2.26500e-002 | 1.83784e-001 |
| 152 | 2.28000e-002 | 1.82399e-001 |
| 153 | 2.29500e-002 | 1.82437e-001 |
| 154 | 2.31000e-002 | 1.82467e-001 |
| 155 | 2.32500e-002 | 1.82491e-001 |
| 156 | 2.34000e-002 | 1.81161e-001 |
| 157 | 2.35500e-002 | 1.81177e-001 |
| 158 | 2.37000e-002 | 1.80120e-001 |
| 159 | 2.38500e-002 | 1.80142e-001 |
| 160 | 2.40000e-002 | 1.80164e-001 |
| 161 | 2.41500e-002 | 1.78478e-001 |
| 162 | 2.43000e-002 | 1.78500e-001 |
| 163 | 2.44500e-002 | 1.78521e-001 |
| 164 | 2.46000e-002 | 1.78543e-001 |
| 165 | 2.47500e-002 | 1.78564e-001 |
| 166 | 2.49000e-002 | 1.78586e-001 |
| 167 | 2.50500e-002 | 1.78608e-001 |
| 168 | 2.52000e-002 | 1.78629e-001 |
| 169 | 2.53500e-002 | 1.78651e-001 |

| | | |
|---|---|---|
| 170 | 2.55000e-002 | 1.78672e-001 |
| 171 | 2.56500e-002 | 1.78694e-001 |
| 172 | 2.58000e-002 | 1.77354e-001 |
| 173 | 2.59500e-002 | 1.74639e-001 |
| 174 | 2.61000e-002 | 1.03174e-001 |
| 175 | 2.62500e-002 | 7.22723e-002 |
| 176 | 2.64000e-002 | 7.23108e-002 |
| 177 | 2.65500e-002 | 7.11756e-002 |
| 178 | 2.67000e-002 | 6.63314e-002 |
| 179 | 2.68500e-002 | 6.63676e-002 |
| 180 | 2.70000e-002 | 6.63994e-002 |
| 181 | 2.71500e-002 | 6.64293e-002 |
| 182 | 2.73000e-002 | 6.49321e-002 |
| 183 | 2.74500e-002 | 6.49528e-002 |
| 184 | 2.76000e-002 | 6.49735e-002 |
| 185 | 2.77500e-002 | 6.49942e-002 |
| 186 | 2.79000e-002 | 6.50149e-002 |
| 187 | 2.80500e-002 | 6.50356e-002 |
| 188 | 2.82000e-002 | 6.50562e-002 |
| 189 | 2.83500e-002 | 6.50769e-002 |
| 190 | 2.85000e-002 | 6.50976e-002 |
| 191 | 2.86500e-002 | 6.51183e-002 |
| 192 | 2.88000e-002 | 6.51390e-002 |
| 193 | 2.89500e-002 | 6.51586e-002 |
| 194 | 2.91000e-002 | 6.51739e-002 |
| 195 | 2.92500e-002 | 6.51891e-002 |
| 196 | 2.94000e-002 | 6.52044e-002 |
| 197 | 2.95500e-002 | 6.52197e-002 |
| 198 | 2.97000e-002 | 6.52350e-002 |
| 199 | 2.98500e-002 | 6.52503e-002 |
| 200 | 3.00000e-002 | 6.52656e-002 |

| | | |
|---|---|---|
| Min : | 1.50000e-005 | 6.21678e-003 |
| Max : | 6.60000e-003 | 2.77395e-001 |

**PROJECT TITLE :**

| | Company | | Client | |
|---|---|---|---|---|
| MIDAS | Author | Nicola | File Name | US1A - scuola muscoline - VV - PO - 06.txt |

```
 ** midas Gen Pushover Curve Data **
_____________________________________________

[ Target Displacement ]
* Disp. Control Node : 200
* Direction : DY
* Load Pattern Type : Accerelation
* SLO- Demand, Capacity, Step, Remark : 0.008276, 0.015879, 21, OK
* SLD- Demand, Capacity, Step, Remark : 0.008276, 0.023700, 21, OK
* SLV- Demand, Capacity, Step, Remark : 0.008276, -, 21, -
* SLC- Demand, Capacity, Step, Remark : 0.008276, -, 21, -
_____________________________________________

- Target Displacement of SLO
  m* = 309.325
  Gamma = 1
  Fy* = 405.155
  T* = 0.14011
  Se(T*) = 0.631508g
  det* = 0.0030793
  qu = 4.72787
  Tc = 0.44
  dt* = 0.00827613 (short period range)
  dt = 0.00827613

- Target Displacement of SLD
  m* = 309.325
  Gamma = 1
  Fy* = 405.155
  T* = 0.14011
  Se(T*) = 0.631508g
  det* = 0.0030793
  qu = 4.72787
  Tc = 0.44
  dt* = 0.00827613 (short period range)
  dt = 0.00827613

- Target Displacement of SLV
  m* = 309.325
  Gamma = 1
  Fy* = 405.155
  T* = 0.14011
  Se(T*) = 0.631508g
  det* = 0.0030793
  qu = 4.72787
  Tc = 0.44
  dt* = 0.00827613 (short period range)
  dt = 0.00827613

- Target Displacement of SLC
  m* = 309.325
  Gamma = 1
  Fy* = 405.155
  T* = 0.14011
  Se(T*) = 0.631508g
  det* = 0.0030793
  qu = 4.72787
  Tc = 0.44
  dt* = 0.00827613 (short period range)
  dt = 0.00827613
_____________________________________________

[ Spectral Displacement(Sd) vs. Spectral Acceleration(Sa) ]

Load Case :GU2 +Y   Unit:  kN,m


 Node : 200   Direction : DY   Mode 2
```

**PROJECT TITLE :**

| | Company | | Client | |
|---|---|---|---|---|
| MIDAS | Author | Nicola | File Name | US1A - scuola muscoline - VV - PO - 06.txt |

| Step | Spectral Displacement(Sd) | Spectral Acceleration(Sa) | Status of Step |
|---|---|---|---|
| 0 | 1.50000e-005 | 3.85485e-003 | |
| 1 | 1.50000e-004 | 3.85485e-002 | |
| 2 | 3.00000e-004 | 6.53794e-002 | |
| 3 | 4.50000e-004 | 9.00716e-002 | |
| 4 | 6.00000e-004 | 1.04059e-001 | |
| 5 | 7.50000e-004 | 1.11537e-001 | |
| 6 | 9.00000e-004 | 1.15170e-001 | |
| 7 | 1.05000e-003 | 1.18299e-001 | |
| 8 | 1.20000e-003 | 1.21428e-001 | |
| 9 | 1.35000e-003 | 1.23135e-001 | |
| 10 | 1.50000e-003 | 1.24416e-001 | |
| 11 | 1.65000e-003 | 1.25697e-001 | |
| 12 | 1.80000e-003 | 1.26977e-001 | |
| 13 | 1.95000e-003 | 1.28258e-001 | |
| 14 | 2.10000e-003 | 1.29451e-001 | |
| 15 | 2.25000e-003 | 1.30295e-001 | |
| 16 | 2.40000e-003 | 1.30836e-001 | |
| 17 | 2.55000e-003 | 1.31294e-001 | |
| 18 | 2.70000e-003 | 1.31752e-001 | |
| 19 | 2.85000e-003 | 1.32210e-001 | |
| 20 | 3.00000e-003 | 1.32613e-001 | |
| 21 | 3.15000e-003 | 1.32854e-001 | SLO(Dem.)SLD(Dem.)SLV(Dem.)SLC(Dem.) |
| 22 | 3.30000e-003 | 1.33095e-001 | |
| 23 | 3.45000e-003 | 1.33291e-001 | |
| 24 | 3.60000e-003 | 1.33397e-001 | |
| 25 | 3.75000e-003 | 1.33503e-001 | |
| 26 | 3.90000e-003 | 1.33608e-001 | |
| 27 | 4.05000e-003 | 1.33714e-001 | |
| 28 | 4.20000e-003 | 1.33820e-001 | |
| 29 | 4.35000e-003 | 1.33925e-001 | |
| 30 | 4.50000e-003 | 1.34031e-001 | |
| 31 | 4.65000e-003 | 1.34136e-001 | |

**PROJECT TITLE :**

| | | | | |
|---|---|---|---|---|
| MIDAS | Company | | Client | |
| | Author | Nicola | File Name | US1A - scuola muscoline - VV - PO - 06.txt |

| | | |
|---|---|---|
| 32 | 4.80000e-003 | 1.34242e-001 |
| 33 | 4.95000e-003 | 1.34348e-001 |
| 34 | 5.10000e-003 | 1.34428e-001 |
| 35 | 5.25000e-003 | 1.34501e-001 |
| 36 | 5.40000e-003 | 1.34575e-001 |
| 37 | 5.55000e-003 | 1.34648e-001 |
| 38 | 5.70000e-003 | 1.34721e-001 |
| 39 | 5.85000e-003 | 1.34795e-001 |
| 40 | 6.00000e-003 | 1.34868e-001 |
| 41 | 6.15000e-003 | 1.34942e-001 |
| 42 | 6.30000e-003 | 1.34988e-001 |
| 43 | 6.45000e-003 | 1.35010e-001 |
| 44 | 6.60000e-003 | 1.35010e-001 |
| 45 | 6.75000e-003 | 1.35011e-001 |
| 46 | 6.90000e-003 | 1.35012e-001 |
| 47 | 7.05000e-003 | 1.35013e-001 |
| 48 | 7.20000e-003 | 1.35014e-001 |
| 49 | 7.35000e-003 | 1.35014e-001 |
| 50 | 7.50000e-003 | 1.35015e-001 |
| 51 | 7.65000e-003 | 1.35016e-001 |
| 52 | 7.80000e-003 | 1.35017e-001 |
| 53 | 7.95000e-003 | 1.35018e-001 |
| 54 | 8.10000e-003 | 1.35018e-001 |
| 55 | 8.25000e-003 | 1.35019e-001 |
| 56 | 8.40000e-003 | 1.35020e-001 |
| 57 | 8.55000e-003 | 1.35021e-001 |
| 58 | 8.70000e-003 | 1.35022e-001 |
| 59 | 8.85000e-003 | 1.35022e-001 |
| 60 | 9.00000e-003 | 1.35023e-001 |
| 61 | 9.15000e-003 | 1.35024e-001 |
| 62 | 9.30000e-003 | 1.35025e-001 |
| 63 | 9.45000e-003 | 1.35026e-001 |
| 64 | 9.60000e-003 | 1.35026e-001 |
| 65 | 9.75000e-003 | 1.35027e-001 |
| 66 | 9.90000e-003 | 1.35028e-001 |

**PROJECT TITLE :**

| | | | | |
|---|---|---|---|---|
| MIDAS | Company | | Client | |
| | Author | Nicola | File Name | US1A - scuola muscoline - VV - PO - 06.txt |

| | | |
|---|---|---|
| 67 | 1.00500e-002 | 1.35029e-001 |
| 68 | 1.02000e-002 | 1.35029e-001 |
| 69 | 1.03500e-002 | 1.35030e-001 |
| 70 | 1.05000e-002 | 1.35031e-001 |
| 71 | 1.06500e-002 | 1.35032e-001 |
| 72 | 1.08000e-002 | 1.35033e-001 |
| 73 | 1.09500e-002 | 1.35033e-001 |
| 74 | 1.11000e-002 | 1.35034e-001 |
| 75 | 1.12500e-002 | 1.35035e-001 |
| 76 | 1.14000e-002 | 1.35036e-001 |
| 77 | 1.15500e-002 | 1.35037e-001 |
| 78 | 1.17000e-002 | 1.35037e-001 |
| 79 | 1.18500e-002 | 1.35038e-001 |
| 80 | 1.20000e-002 | 1.35039e-001 |
| 81 | 1.21500e-002 | 1.35040e-001 |
| 82 | 1.23000e-002 | 1.35041e-001 |
| 83 | 1.24500e-002 | 1.35041e-001 |
| 84 | 1.26000e-002 | 1.35042e-001 |
| 85 | 1.27500e-002 | 1.35043e-001 |
| 86 | 1.29000e-002 | 1.35044e-001 |
| 87 | 1.30500e-002 | 1.35045e-001 |
| 88 | 1.32000e-002 | 1.35045e-001 |
| 89 | 1.33500e-002 | 1.35046e-001 |
| 90 | 1.35000e-002 | 1.35047e-001 |
| 91 | 1.36500e-002 | 1.35048e-001 |
| 92 | 1.38000e-002 | 1.35049e-001 |
| 93 | 1.39500e-002 | 1.35049e-001 |
| 94 | 1.41000e-002 | 1.35050e-001 |
| 95 | 1.42500e-002 | 1.35051e-001 |
| 96 | 1.44000e-002 | 1.35052e-001 |
| 97 | 1.45500e-002 | 1.35053e-001 |
| 98 | 1.47000e-002 | 1.35053e-001 |
| 99 | 1.48500e-002 | 1.35054e-001 |
| 100 | 1.50000e-002 | 1.35055e-001 |

**PROJECT TITLE :**

| | Company | | Client | |
|---|---|---|---|---|
| MIDAS | Author | Nicola | File Name | US1A - scuola muscoline - VV - PO - 06.txt |

| | | |
|---|---|---|
| 101 | 1.51500e-002 | 1.35056e-001 |
| 102 | 1.53000e-002 | 1.35056e-001 |
| 103 | 1.54500e-002 | 1.35057e-001 |
| 104 | 1.56000e-002 | 1.35058e-001 |
| 105 | 1.57500e-002 | 1.35059e-001 |
| 106 | 1.59000e-002 | 1.35060e-001 |
| 107 | 1.60500e-002 | 1.35060e-001 |
| 108 | 1.62000e-002 | 1.35061e-001 |
| 109 | 1.63500e-002 | 1.35062e-001 |
| 110 | 1.65000e-002 | 1.35063e-001 |
| 111 | 1.66500e-002 | 1.35064e-001 |
| 112 | 1.68000e-002 | 1.35064e-001 |
| 113 | 1.69500e-002 | 1.35065e-001 |
| 114 | 1.71000e-002 | 1.35066e-001 |
| 115 | 1.72500e-002 | 1.35067e-001 |
| 116 | 1.74000e-002 | 1.35068e-001 |
| 117 | 1.75500e-002 | 1.35068e-001 |
| 118 | 1.77000e-002 | 1.35069e-001 |
| 119 | 1.78500e-002 | 1.35070e-001 |
| 120 | 1.80000e-002 | 1.35071e-001 |
| 121 | 1.81500e-002 | 1.35072e-001 |
| 122 | 1.83000e-002 | 1.35072e-001 |
| 123 | 1.84500e-002 | 1.35073e-001 |
| 124 | 1.86000e-002 | 1.35074e-001 |
| 125 | 1.87500e-002 | 1.35075e-001 |
| 126 | 1.89000e-002 | 1.35076e-001 |
| 127 | 1.90500e-002 | 1.35076e-001 |
| 128 | 1.92000e-002 | 1.35077e-001 |
| 129 | 1.93500e-002 | 1.35078e-001 |
| 130 | 1.95000e-002 | 1.35079e-001 |
| 131 | 1.96500e-002 | 1.35079e-001 |
| 132 | 1.98000e-002 | 1.35080e-001 |
| 133 | 1.99500e-002 | 1.35081e-001 |
| 134 | 2.01000e-002 | 1.35082e-001 |
| 135 | 2.02500e-002 | 1.35083e-001 |

| | | |
|---|---|---|
| 136 | 2.04000e-002 | 1.35083e-001 |
| 137 | 2.05500e-002 | 1.35084e-001 |
| 138 | 2.07000e-002 | 1.35085e-001 |
| 139 | 2.08500e-002 | 1.35086e-001 |
| 140 | 2.10000e-002 | 1.35087e-001 |
| 141 | 2.11500e-002 | 1.35087e-001 |
| 142 | 2.13000e-002 | 1.35088e-001 |
| 143 | 2.14500e-002 | 1.35089e-001 |
| 144 | 2.16000e-002 | 1.35090e-001 |
| 145 | 2.17500e-002 | 1.35091e-001 |
| 146 | 2.19000e-002 | 1.35091e-001 |
| 147 | 2.20500e-002 | 1.35092e-001 |
| 148 | 2.22000e-002 | 1.35093e-001 |
| 149 | 2.23500e-002 | 1.35094e-001 |
| 150 | 2.25000e-002 | 1.35095e-001 |
| 151 | 2.26500e-002 | 1.35095e-001 |
| 152 | 2.28000e-002 | 1.35096e-001 |
| 153 | 2.29500e-002 | 1.35097e-001 |
| 154 | 2.31000e-002 | 1.35098e-001 |
| 155 | 2.32500e-002 | 1.35098e-001 |
| 156 | 2.34000e-002 | 1.35099e-001 |
| 157 | 2.35500e-002 | 1.35100e-001 |
| 158 | 2.37000e-002 | 1.35101e-001 |
| SLD(Cap.) | | |
| 159 | 2.38500e-002 | 1.33772e-001 |
| 160 | 2.40000e-002 | 1.33794e-001 |
| 161 | 2.41500e-002 | 1.33803e-001 |
| 162 | 2.43000e-002 | 1.33812e-001 |
| 163 | 2.44500e-002 | 1.33821e-001 |
| 164 | 2.46000e-002 | 1.33831e-001 |
| 165 | 2.47500e-002 | 1.33840e-001 |
| 166 | 2.49000e-002 | 1.33849e-001 |
| 167 | 2.50500e-002 | 1.33858e-001 |
| 168 | 2.52000e-002 | 1.33867e-001 |
| 169 | 2.53500e-002 | 1.33877e-001 |

| | | |
|---|---|---|
| 170 | 2.55000e-002 | 1.19843e-001 |
| 171 | 2.56500e-002 | 1.20220e-001 |
| 172 | 2.58000e-002 | 1.20431e-001 |
| 173 | 2.59500e-002 | 1.20544e-001 |
| 174 | 2.61000e-002 | 9.29356e-002 |
| 175 | 2.62500e-002 | 9.29445e-002 |
| 176 | 2.64000e-002 | 9.29534e-002 |
| 177 | 2.65500e-002 | 9.29622e-002 |
| 178 | 2.67000e-002 | 6.55029e-002 |
| 179 | 2.68500e-002 | 6.55420e-002 |
| 180 | 2.70000e-002 | 4.15448e-002 |
| 181 | 2.71500e-002 | 4.15837e-002 |
| 182 | 2.73000e-002 | 4.16225e-002 |
| 183 | 2.74500e-002 | 4.04681e-002 |
| 184 | 2.76000e-002 | 4.05007e-002 |
| 185 | 2.77500e-002 | 4.05164e-002 |
| 186 | 2.79000e-002 | 4.05186e-002 |
| 187 | 2.80500e-002 | 4.05208e-002 |
| 188 | 2.82000e-002 | 4.05231e-002 |
| 189 | 2.83500e-002 | 4.05253e-002 |
| 190 | 2.85000e-002 | 4.05275e-002 |
| 191 | 2.86500e-002 | 4.05298e-002 |
| 192 | 2.88000e-002 | 4.05320e-002 |
| 193 | 2.89500e-002 | 4.05342e-002 |
| 194 | 2.91000e-002 | 4.05364e-002 |
| 195 | 2.92500e-002 | 4.05387e-002 |
| 196 | 2.94000e-002 | 4.05409e-002 |
| 197 | 2.95500e-002 | 4.05431e-002 |
| 198 | 2.97000e-002 | 4.05454e-002 |
| 199 | 2.98500e-002 | 4.05476e-002 |
| 200 | 3.00000e-002 | 4.05498e-002 |

| | | |
|---|---|---|
| Min : | 1.50000e-005 | 3.85485e-003 |
| Max : | 2.37000e-002 | 1.35101e-001 |

**PROJECT TITLE :**

| | | | | |
|---|---|---|---|---|
| MIDAS | Company | | Client | |
| | Author | Nicola | File Name | US1A - scuola muscoline - VV - PO - 06.txt |

```
 ** midas Gen Pushover Curve Data **
_____________________________________________

[ Target Displacement ]
* Disp. Control Node : 200
* Direction : DY
* Load Pattern Type : Accerelation
* SLO- Demand, Capacity, Step, Remark : 0.008256, 0.015879, 20, OK
* SLD- Demand, Capacity, Step, Remark : 0.008256, 0.023700, 20, OK
* SLV- Demand, Capacity, Step, Remark : 0.008256, -, 20, -
* SLC- Demand, Capacity, Step, Remark : 0.008256, -, 20, -
_____________________________________________

- Target Displacement of SLO
  m* = 309.325
  Gamma = 1
  Fy* = 405.087
  T* = 0.139904
  Se(T*) = 0.631039g
  det* = 0.00306795
  qu = 4.72515
  Tc = 0.44
  dt* = 0.00825602 (short period range)
  dt = 0.00825602

- Target Displacement of SLD
  m* = 309.325
  Gamma = 1
  Fy* = 405.087
  T* = 0.139904
  Se(T*) = 0.631039g
  det* = 0.00306795
  qu = 4.72515
  Tc = 0.44
  dt* = 0.00825602 (short period range)
  dt = 0.00825602

- Target Displacement of SLV
  m* = 309.325
  Gamma = 1
  Fy* = 405.087
  T* = 0.139904
  Se(T*) = 0.631039g
  det* = 0.00306795
  qu = 4.72515
  Tc = 0.44
  dt* = 0.00825602 (short period range)
  dt = 0.00825602

- Target Displacement of SLC
  m* = 309.325
  Gamma = 1
  Fy* = 405.087
  T* = 0.139904
  Se(T*) = 0.631039g
  det* = 0.00306795
  qu = 4.72515
  Tc = 0.44
  dt* = 0.00825602 (short period range)
  dt = 0.00825602
_____________________________________________

[ Spectral Displacement(Sd) vs. Spectral Acceleration(Sa) ]

Load Case :GU2 -Y   Unit:  kN,m


 Node : 200   Direction : DY   Mode 2
```

**PROJECT TITLE :**

| | Company | | Client | |
|---|---|---|---|---|
| MIDAS | Author | Nicola | File Name | US1A - scuola muscoline - VV - PO - 06.txt |

| Step | Spectral Displacement(Sd) | Spectral Acceleration(Sa) | Status of Step |
|---|---|---|---|
| 0 | 1.50000e-005 | 3.73827e-003 | |
| 1 | 1.50000e-004 | 3.73827e-002 | |
| 2 | 3.00000e-004 | 6.42136e-002 | |
| 3 | 4.50000e-004 | 9.10446e-002 | |
| 4 | 6.00000e-004 | 1.07081e-001 | |
| 5 | 7.50000e-004 | 1.13903e-001 | |
| 6 | 9.00000e-004 | 1.17077e-001 | |
| 7 | 1.05000e-003 | 1.20206e-001 | |
| 8 | 1.20000e-003 | 1.22686e-001 | |
| 9 | 1.35000e-003 | 1.23967e-001 | |
| 10 | 1.50000e-003 | 1.25247e-001 | |
| 11 | 1.65000e-003 | 1.26528e-001 | |
| 12 | 1.80000e-003 | 1.27808e-001 | |
| 13 | 1.95000e-003 | 1.29089e-001 | |
| 14 | 2.10000e-003 | 1.29959e-001 | |
| 15 | 2.25000e-003 | 1.30417e-001 | |
| 16 | 2.40000e-003 | 1.30875e-001 | |
| 17 | 2.55000e-003 | 1.31333e-001 | |
| 18 | 2.70000e-003 | 1.31791e-001 | |
| 19 | 2.85000e-003 | 1.32183e-001 | |
| 20 | 3.00000e-003 | 1.32424e-001 | SLO(Dem.)SLD(Dem.)SLV(Dem.)SLC(Dem.) |
| 21 | 3.15000e-003 | 1.32665e-001 | |
| 22 | 3.30000e-003 | 1.32905e-001 | |
| 23 | 3.45000e-003 | 1.33108e-001 | |
| 24 | 3.60000e-003 | 1.33213e-001 | |
| 25 | 3.75000e-003 | 1.33319e-001 | |
| 26 | 3.90000e-003 | 1.33424e-001 | |
| 27 | 4.05000e-003 | 1.33530e-001 | |
| 28 | 4.20000e-003 | 1.33636e-001 | |
| 29 | 4.35000e-003 | 1.33741e-001 | |
| 30 | 4.50000e-003 | 1.33847e-001 | |
| 31 | 4.65000e-003 | 1.33953e-001 | |

**PROJECT TITLE :**

| | | | | |
|---|---|---|---|---|
| MIDAS | Company | | Client | |
| | Author | Nicola | File Name | US1A - scuola muscoline - VV - PO - 06.txt |

| | | |
|---|---|---|
| 32 | 4.80000e-003 | 1.34058e-001 |
| 33 | 4.95000e-003 | 1.34164e-001 |
| 34 | 5.10000e-003 | 1.34246e-001 |
| 35 | 5.25000e-003 | 1.34319e-001 |
| 36 | 5.40000e-003 | 1.34393e-001 |
| 37 | 5.55000e-003 | 1.34466e-001 |
| 38 | 5.70000e-003 | 1.34540e-001 |
| 39 | 5.85000e-003 | 1.34613e-001 |
| 40 | 6.00000e-003 | 1.34686e-001 |
| 41 | 6.15000e-003 | 1.34760e-001 |
| 42 | 6.30000e-003 | 1.34797e-001 |
| 43 | 6.45000e-003 | 1.34808e-001 |
| 44 | 6.60000e-003 | 1.34809e-001 |
| 45 | 6.75000e-003 | 1.34809e-001 |
| 46 | 6.90000e-003 | 1.34810e-001 |
| 47 | 7.05000e-003 | 1.34811e-001 |
| 48 | 7.20000e-003 | 1.34812e-001 |
| 49 | 7.35000e-003 | 1.34813e-001 |
| 50 | 7.50000e-003 | 1.34813e-001 |
| 51 | 7.65000e-003 | 1.34814e-001 |
| 52 | 7.80000e-003 | 1.34815e-001 |
| 53 | 7.95000e-003 | 1.34816e-001 |
| 54 | 8.10000e-003 | 1.34817e-001 |
| 55 | 8.25000e-003 | 1.34817e-001 |
| 56 | 8.40000e-003 | 1.34818e-001 |
| 57 | 8.55000e-003 | 1.34819e-001 |
| 58 | 8.70000e-003 | 1.34820e-001 |
| 59 | 8.85000e-003 | 1.34821e-001 |
| 60 | 9.00000e-003 | 1.34821e-001 |
| 61 | 9.15000e-003 | 1.34822e-001 |
| 62 | 9.30000e-003 | 1.34823e-001 |
| 63 | 9.45000e-003 | 1.34824e-001 |
| 64 | 9.60000e-003 | 1.34825e-001 |
| 65 | 9.75000e-003 | 1.34825e-001 |
| 66 | 9.90000e-003 | 1.34826e-001 |

**PROJECT TITLE :**

| | | | | |
|---|---|---|---|---|
| MIDAS | Company | | Client | |
| | Author | Nicola | File Name | US1A - scuola muscoline - VV - PO - 06.txt |

| | | |
|---|---|---|
| 67 | 1.00500e-002 | 1.34827e-001 |
| 68 | 1.02000e-002 | 1.34828e-001 |
| 69 | 1.03500e-002 | 1.34829e-001 |
| 70 | 1.05000e-002 | 1.34829e-001 |
| 71 | 1.06500e-002 | 1.34830e-001 |
| 72 | 1.08000e-002 | 1.34831e-001 |
| 73 | 1.09500e-002 | 1.34832e-001 |
| 74 | 1.11000e-002 | 1.34833e-001 |
| 75 | 1.12500e-002 | 1.34833e-001 |
| 76 | 1.14000e-002 | 1.34834e-001 |
| 77 | 1.15500e-002 | 1.34835e-001 |
| 78 | 1.17000e-002 | 1.34836e-001 |
| 79 | 1.18500e-002 | 1.34836e-001 |
| 80 | 1.20000e-002 | 1.34837e-001 |
| 81 | 1.21500e-002 | 1.34838e-001 |
| 82 | 1.23000e-002 | 1.34839e-001 |
| 83 | 1.24500e-002 | 1.34840e-001 |
| 84 | 1.26000e-002 | 1.34840e-001 |
| 85 | 1.27500e-002 | 1.34841e-001 |
| 86 | 1.29000e-002 | 1.34842e-001 |
| 87 | 1.30500e-002 | 1.34843e-001 |
| 88 | 1.32000e-002 | 1.34844e-001 |
| 89 | 1.33500e-002 | 1.34844e-001 |
| 90 | 1.35000e-002 | 1.34845e-001 |
| 91 | 1.36500e-002 | 1.34846e-001 |
| 92 | 1.38000e-002 | 1.34847e-001 |
| 93 | 1.39500e-002 | 1.34848e-001 |
| 94 | 1.41000e-002 | 1.34848e-001 |
| 95 | 1.42500e-002 | 1.34849e-001 |
| 96 | 1.44000e-002 | 1.34850e-001 |
| 97 | 1.45500e-002 | 1.34851e-001 |
| 98 | 1.47000e-002 | 1.34852e-001 |
| 99 | 1.48500e-002 | 1.34852e-001 |
| 100 | 1.50000e-002 | 1.34853e-001 |

**PROJECT TITLE :**

| | | | | |
|---|---|---|---|---|
| MIDAS | Company | | Client | |
| | Author | Nicola | File Name | US1A - scuola muscoline - VV - PO - 06.txt |

| | | |
|---|---|---|
| 101 | 1.51500e-002 | 1.34854e-001 |
| 102 | 1.53000e-002 | 1.34855e-001 |
| 103 | 1.54500e-002 | 1.34856e-001 |
| 104 | 1.56000e-002 | 1.34856e-001 |
| 105 | 1.57500e-002 | 1.34857e-001 |
| 106 | 1.59000e-002 | 1.34858e-001 |
| 107 | 1.60500e-002 | 1.34859e-001 |
| 108 | 1.62000e-002 | 1.34859e-001 |
| 109 | 1.63500e-002 | 1.34860e-001 |
| 110 | 1.65000e-002 | 1.34861e-001 |
| 111 | 1.66500e-002 | 1.34862e-001 |
| 112 | 1.68000e-002 | 1.34863e-001 |
| 113 | 1.69500e-002 | 1.34863e-001 |
| 114 | 1.71000e-002 | 1.34864e-001 |
| 115 | 1.72500e-002 | 1.34865e-001 |
| 116 | 1.74000e-002 | 1.34866e-001 |
| 117 | 1.75500e-002 | 1.34867e-001 |
| 118 | 1.77000e-002 | 1.34867e-001 |
| 119 | 1.78500e-002 | 1.34868e-001 |
| 120 | 1.80000e-002 | 1.34869e-001 |
| 121 | 1.81500e-002 | 1.34870e-001 |
| 122 | 1.83000e-002 | 1.34871e-001 |
| 123 | 1.84500e-002 | 1.34871e-001 |
| 124 | 1.86000e-002 | 1.34872e-001 |
| 125 | 1.87500e-002 | 1.34873e-001 |
| 126 | 1.89000e-002 | 1.34874e-001 |
| 127 | 1.90500e-002 | 1.34875e-001 |
| 128 | 1.92000e-002 | 1.34875e-001 |
| 129 | 1.93500e-002 | 1.34876e-001 |
| 130 | 1.95000e-002 | 1.34877e-001 |
| 131 | 1.96500e-002 | 1.34878e-001 |
| 132 | 1.98000e-002 | 1.34879e-001 |
| 133 | 1.99500e-002 | 1.34879e-001 |
| 134 | 2.01000e-002 | 1.34880e-001 |
| 135 | 2.02500e-002 | 1.34881e-001 |

| | | |
|---|---|---|
| 136 | 2.04000e-002 | 1.34882e-001 |
| 137 | 2.05500e-002 | 1.34882e-001 |
| 138 | 2.07000e-002 | 1.34883e-001 |
| 139 | 2.08500e-002 | 1.34884e-001 |
| 140 | 2.10000e-002 | 1.34885e-001 |
| 141 | 2.11500e-002 | 1.34886e-001 |
| 142 | 2.13000e-002 | 1.34886e-001 |
| 143 | 2.14500e-002 | 1.34887e-001 |
| 144 | 2.16000e-002 | 1.34888e-001 |
| 145 | 2.17500e-002 | 1.34889e-001 |
| 146 | 2.19000e-002 | 1.34890e-001 |
| 147 | 2.20500e-002 | 1.34890e-001 |
| 148 | 2.22000e-002 | 1.34891e-001 |
| 149 | 2.23500e-002 | 1.34892e-001 |
| 150 | 2.25000e-002 | 1.34893e-001 |
| 151 | 2.26500e-002 | 1.34894e-001 |
| 152 | 2.28000e-002 | 1.34894e-001 |
| 153 | 2.29500e-002 | 1.34895e-001 |
| 154 | 2.31000e-002 | 1.34896e-001 |
| 155 | 2.32500e-002 | 1.34897e-001 |
| 156 | 2.34000e-002 | 1.34898e-001 |
| 157 | 2.35500e-002 | 1.34898e-001 |
| 158 | 2.37000e-002 | 1.34899e-001 |
| SLD(Cap.) | | |
| 159 | 2.38500e-002 | 1.33585e-001 |
| 160 | 2.40000e-002 | 1.33594e-001 |
| 161 | 2.41500e-002 | 1.33603e-001 |
| 162 | 2.43000e-002 | 1.33612e-001 |
| 163 | 2.44500e-002 | 1.33621e-001 |
| 164 | 2.46000e-002 | 1.33630e-001 |
| 165 | 2.47500e-002 | 1.33640e-001 |
| 166 | 2.49000e-002 | 1.33649e-001 |
| 167 | 2.50500e-002 | 1.33658e-001 |
| 168 | 2.52000e-002 | 1.33667e-001 |
| 169 | 2.53500e-002 | 1.33676e-001 |

| | | |
|---|---|---|
| 170 | 2.55000e-002 | 1.33685e-001 |
| 171 | 2.56500e-002 | 1.33694e-001 |
| 172 | 2.58000e-002 | 1.19672e-001 |
| 173 | 2.59500e-002 | 1.20043e-001 |
| 174 | 2.61000e-002 | 1.20250e-001 |
| 175 | 2.62500e-002 | 9.26907e-002 |
| 176 | 2.64000e-002 | 9.27530e-002 |
| 177 | 2.65500e-002 | 9.27618e-002 |
| 178 | 2.67000e-002 | 6.53019e-002 |
| 179 | 2.68500e-002 | 4.12978e-002 |
| 180 | 2.70000e-002 | 4.13368e-002 |
| 181 | 2.71500e-002 | 4.13759e-002 |
| 182 | 2.73000e-002 | 4.14150e-002 |
| 183 | 2.74500e-002 | 4.14541e-002 |
| 184 | 2.76000e-002 | 4.03005e-002 |
| 185 | 2.77500e-002 | 4.03193e-002 |
| 186 | 2.79000e-002 | 4.03215e-002 |
| 187 | 2.80500e-002 | 4.03238e-002 |
| 188 | 2.82000e-002 | 4.03260e-002 |
| 189 | 2.83500e-002 | 4.03282e-002 |
| 190 | 2.85000e-002 | 4.03305e-002 |
| 191 | 2.86500e-002 | 4.03327e-002 |
| 192 | 2.88000e-002 | 4.03349e-002 |
| 193 | 2.89500e-002 | 4.03371e-002 |
| 194 | 2.91000e-002 | 4.03394e-002 |
| 195 | 2.92500e-002 | 4.03416e-002 |
| 196 | 2.94000e-002 | 4.03438e-002 |
| 197 | 2.95500e-002 | 4.03460e-002 |
| 198 | 2.97000e-002 | 4.03483e-002 |
| 199 | 2.98500e-002 | 4.03505e-002 |
| 200 | 3.00000e-002 | 4.03527e-002 |

| | | |
|---|---|---|
| Min : | 1.50000e-005 | 3.73827e-003 |
| Max : | 2.37000e-002 | 1.34899e-001 |

### *1.3.2 Corpo B*

```
;---------------------------------------------------------------------------
;  midas Gen Text(MGT) File.
;  Date : 2020/6/15
;---------------------------------------------------------------------------

*VERSION
   8.8.1

*UNIT    ; Unit System
; FORCE, LENGTH, HEAT, TEMPER
   KN   , M, BTU, F

*PROJINFO    ; Project Information
; PROJECT, REVISION, USER, EMAIL, ADDRESS, TEL, FAX, CLIENT, TITLE, ENGINEER, EDATE
    ; One Line per Data
; CHECK1, CDATE1, CHECK2, CDATE2, CHECK3, CDATE3, APPROVE, ADATE, COMMENT
    ; One Line per Data
   USER=Nicola
   ADDRESS=DiMoRe

*STRUCTYPE    ; Structure Type
; iSTYP, iMASS, iSMAS, bMASSOFFSET, bSELFWEIGHT, GRAV, TEMPER, bALIGNBEAM, bALIGNSLAB,
 bROTRIGID
     0, 1, 1, NO, YES, 9.806, 0, NO, NO, YES

*REBAR-MATL-CODE    ; Rebar Material Code
; CONC_CODE, CONC_MDB, SRC_CODE, SRC_MDB
 NTC08(RC), B450C, ASTM(RC), Grade 60

*NODE    ; Nodes
; iNO, X, Y, Z
    38, -4.62217282048982e-006, 7.47939245575346, -1
    39, -4.62216798169379e-006, -4.16962180338487e-007, -1
    43, 7.04999537783322, -4.16961704274854e-007, -1
    49, 7.04999537783148, 12.7010418908237, -1
    55, 13.3499953778309, 12.701041890823, -1
    59, 13.3499953778312, 6.3499995830426, -1
    62, 13.3499953778309, -4.16960912019704e-007, -1
    86, 16.9499953778329, 9.89999958303782, -1
    90, 3.69999537783293, 12.3349995830378, -1
    92, 0.622495377828889, 7.47939245575443, -1
    93, 0.962495377831599, -4.16962180338487e-007, -1
    94, 7.04999537783235, 8.74999958303782, -1
    95, 7.81249537783191, 12.7010418908237, -1
    96, 10.2999953778315, 12.7010418908237, -1
    97, 12.6874953778308, 12.7010418908233, -1
    98, 13.3499953778309, 11.3277707369302, -1
    99, 11.0124953778315, 6.34999958304021, -1
   100, 13.3499953778309, 0.772499583038454, -1
   101, 12.4374953778308, -4.16961837501617e-007, -1
   103, 0.962495377831599, -4.16962180338487e-007, 3.35
   107, 7.04999537783322, -4.16961704274854e-007, 3.35
   108, 12.4374953778308, -4.16961837501617e-007, 3.35
   109, 0.622495377828889, 7.47939245575443, 3.35
   111, 11.0124953778315, 6.34999958304021, 3.35
   112, 7.81249537783191, 12.7010418908237, 3.35
   113, 10.2999953778315, 12.7010418908237, 3.35
   114, 12.6874953778308, 12.7010418908233, 3.35
   166, 7.04999537783325, 0.81197842914518, -1
   167, 7.04999537783227, 4.69947842914436, -1
   168, 7.04999537783148, 12.1130207369307, -1
   173, 16.9499953778329, 13.1120545236714, -1
```

```
179, 7.04999537783325, 0.81197842914518, 3.35
180, 7.04999537783227, 4.69947842914436, 3.35
181, 13.3499953778309, 0.772499583038454, 3.35
182, 13.3499953778326, 5.45499958303782, -1
183, 13.3499953778326, 5.45499958303782, 3.35
184, 13.3499953778312, 6.3499995830426, 3.35
185, 7.04999537783235, 8.74999958303782, 3.35
186, 3.69999537783293, 12.3349995830378, 3.35
187, 7.04999537783148, 12.1130207369307, 3.35
188, 13.3499953778309, 11.3277707369302, 3.35
189, 16.9499953778329, 13.1120545236714, 3.35
202, -4.62217282048982e-006, 7.47939245575346, 3.35
203, -4.62216798169379e-006, -4.16962180338487e-007, 3.35
204, 7.04999537783148, 12.7010418908237, 3.35
205, 13.3499953778309, -4.16960912019704e-007, 3.35
208, 16.9499953778329, 9.89999958303782, 3.35
231, -4.62216798169379e-006, 3.79999958303782, -1
236, -4.62216798169379e-006, 3.79999958303782, 3.35
239, 13.3499953778309, 12.701041890823, 3.35
241, 16.9499953778329, 12.701041890823, 3.35
242, 16.9499953778329, 11.3277707369302, 3.35
243, 7.04999537783235, 6.34999958303967, 3.35
245, 13.349995377831, 9.89999958303766, 3.35
248, 3.69999537783293, 7.47939245575453, -1
251, 3.69999537783235, 7.47939245575453, 3.35
253, 3.69999537783289, 12.7010418908233, 3.35
449, 7.17399537783235, 6.34999958303967, 3.35
450, 7.17399537783273, 6.34999958303827, -1
451, 16.9499953778329, 5.46999958303782, -1
452, 16.9499953778329, 5.46999958303782, 3.35
453, 16.9499953778329, 1.21999958303782, -1
454, 16.9499953778329, 1.21999958303782, 3.35
455, 16.9499953778309, -4.16960912019704e-007, 3.35
456, 7.66249537783322, -4.16961704274854e-007, -1
457, 7.66249537783322, -4.16961704274854e-007, 3.35
466, 3.69999537783293, 12.3349995830378, 2.75
469, 3.69999537783293, 12.3349995830378, 3.05
497, 7.81249537783191, 12.7010418908237, 1.9
498, 10.2999953778315, 12.7010418908237, 1.9
499, 12.6874953778308, 12.7010418908233, 1.9
500, 7.81249537783191, 12.7010418908237, 2.625
501, 10.2999953778315, 12.7010418908237, 2.625
502, 12.6874953778308, 12.7010418908233, 2.625
503, 11.1749953778315, 12.7010418908237, 2.625
504, 9.42499537783148, 12.7010418908237, 2.625
505, 8.57749537783191, 12.7010418908237, 2.625
506, 12.0224953778308, 12.7010418908233, 2.625
507, 11.0124953778315, 6.34999958304021, 1.9
508, 7.17399537783235, 6.34999958303967, 1.9
509, 11.0124953778315, 6.34999958304021, 2.625
510, 7.17399537783235, 6.34999958303967, 2.625
511, 8.67249537783147, 6.34999958304021, 2.625
512, 7.29899537783235, 6.34999958303967, 2.625
513, 0.962495377831599, -4.16962180338487e-007, 2.9
515, 12.4374953778308, -4.16961837501617e-007, 2.9
516, 0.622495377828889, 7.47939245575443, 2.9
517, 13.3499953778309, 0.772499583038454, 2.9
518, 13.3499953778326, 5.45499958303782, 2.9
519, 13.3499953778312, 6.3499995830426, 2.9
520, 3.69999537783235, 7.47939245575453, 2.9
521, 7.66249537783322, -4.16961704274854e-007, 2.9
522, 13.3499953778309, 11.3277707369302, 2.9
```

```
   523, 0.962495377831599, -4.16962180338487e-007, 3.125
   525, 12.4374953778308, -4.16961837501617e-007, 3.125
   526, 0.622495377828889, 7.47939245575443, 3.125
   527, 13.3499953778309, 0.772499583038454, 3.125
   528, 13.3499953778326, 5.45499958303782, 3.125
   529, 13.3499953778312, 6.3499995830426, 3.125
   530, 3.69999537783235, 7.47939245575453, 3.125
   531, 7.66249537783322, -4.16961704274854e-007, 3.125
   532, 13.3499953778309, 11.3277707369302, 3.125
   533, 1.24749537782889, 7.47939245575443, 3.125
   534, 3.46499537783235, 7.47939245575453, 3.125
   535, 1.9274953778316, -4.16962180338487e-007, 3.125
   536, 5.17499537783177, -4.1696276298353e-007, 3.125
   537, 11.5224953778308, -4.16961837501617e-007, 3.125
   538, 8.27499537783322, -4.16961704274854e-007, 3.125
   539, 13.3499953778309, 1.52449958303845, 3.125
   540, 13.3499953778326, 4.85499958303782, 3.125
   541, 13.3499953778312, 6.6499995830426, 3.125
   542, 13.3499953778309, 9.95277073693018, 3.125
   543, 7.04999537783227, 4.69947842914436, 1.9
   544, 7.04999537783235, 8.74999958303782, 1.9
   545, 7.04999537783148, 12.1130207369307, 1.9
   546, 7.04999537783227, 4.69947842914436, 2.625
   547, 7.04999537783235, 8.74999958303782, 2.625
   548, 7.04999537783148, 12.1130207369307, 2.625
   549, 7.04999537783227, 6.47447842914436, 2.625
   550, 7.04999537783235, 8.12499958303782, 2.625
   551, 7.04999537783235, 9.37499958303782, 2.625
   552, 7.04999537783148, 11.5230207369307, 2.625
   553, 6.11499537783177, -4.1696276298353e-007, 3.35
   554, 6.11499537783177, -4.1696276298353e-007, -1
   555, 6.11499537783177, -4.1696276298353e-007, 2.9
   556, 6.11499537783177, -4.1696276298353e-007, 3.125

*ELEMENT    ; Elements
; iEL, TYPE, iMAT, iPRO, iN1, iN2, ANGLE, iSUB,                      ; Frame  Element
; iEL, TYPE, iMAT, iPRO, iN1, iN2, ANGLE, iSUB, EXVAL, EXVAL2, bLMT ; Comp/Tens Truss
; iEL, TYPE, iMAT, iPRO, iN1, iN2, iN3, iN4, iSUB, iWID , LCAXIS    ; Planar Element
; iEL, TYPE, iMAT, iPRO, iN1, iN2, iN3, iN4, iN5, iN6, iN7, iN8     ; Solid  Element
     3, BEAM  ,    1,   100,   231,   236,    90,     0
     6, BEAM  ,    1,     5,    92,   516,     0,     0
     7, BEAM  ,    1,     1,    93,   513,     0,     0
    13, BEAM  ,    1,     6,   248,   520,     0,     0
    14, BEAM  ,    1,   108,    90,   466,    90,     0
    20, BEAM  ,    1,   101,   166,   179,    90,     0
    21, BEAM  ,    1,   103,   167,   543,    90,     0
    22, BEAM  ,    1,   107,    94,   544,    90,     0
    23, BEAM  ,    1,   109,   168,   545,    90,     0
    25, BEAM  ,    3,     8,    95,   497,     0,     0
    28, BEAM  ,    3,     9,    96,   498,     0,     0
    29, BEAM  ,    3,     7,    99,   507,     0,     0
    31, BEAM  ,    1,     4,   101,   515,     0,     0
    32, BEAM  ,    3,    10,    97,   499,     0,     0
    35, BEAM  ,    1,   104,   100,   517,    90,     0
    36, BEAM  ,    1,   105,   182,   518,    90,     0
    37, BEAM  ,    1,   106,    59,   519,    90,     0
    38, BEAM  ,    1,   110,    98,   522,    90,     0
    41, BEAM  ,    1,   700,   173,   189,    90,     0
  2000, BEAM  ,    3,   700,   450,   508,     0,     0
  2004, BEAM  ,    1,   700,    39,   203,     0,     0
  2005, BEAM  ,    1,   700,    38,   202,     0,     0
  2008, BEAM  ,    1,   700,    62,   205,     0,     0
```

```
2009, BEAM  ,    1,   700,    86,   208,     0,     0
2011, BEAM  ,    1,   700,    49,   204,     0,     0
2012, BEAM  ,    1,   700,    55,   239,     0,     0
6000, BEAM  ,    6,   701,   203,   103,     0,     0
6001, BEAM  ,    6,   701,   103,   553,     0,     0
6003, BEAM  ,    6,   701,   107,   457,     0,     0
6004, BEAM  ,    6,   701,   108,   205,     0,     0
6005, BEAM  ,    6,   701,   205,   181,     0,     0
6006, BEAM  ,    6,   702,   107,   179,     0,     0
6007, BEAM  ,    6,   701,   203,   236,     0,     0
6009, BEAM  ,    6,   702,   179,   180,     0,     0
6010, BEAM  ,    6,   701,   181,   183,     0,     0
6012, BEAM  ,    6,   701,   236,   202,     0,     0
6013, BEAM  ,    6,   702,   180,   243,     0,     0
6015, BEAM  ,    6,   701,   183,   184,     0,     0
6016, BEAM  ,    6,   702,   243,   449,     0,     0
6017, BEAM  ,    6,   702,   449,   111,     0,     0
6018, BEAM  ,    6,   702,   111,   184,     0,     0
6020, BEAM  ,    6,   701,   202,   109,     0,     0
6021, BEAM  ,    6,   701,   109,   251,     0,     0
6022, BEAM  ,    6,   702,   243,   185,     0,     0
6023, BEAM  ,    6,   701,   184,   245,     0,     0
6024, BEAM  ,    6,   701,   245,   208,     0,     0
6029, BEAM  ,    6,   701,   251,   186,     0,     0
6030, BEAM  ,    6,   702,   185,   187,     0,     0
6031, BEAM  ,    6,   702,   245,   188,     0,     0
6032, BEAM  ,    6,   704,   208,   242,     0,     0
6035, BEAM  ,    6,   702,   188,   239,     0,     0
6036, BEAM  ,    6,   704,   242,   241,     0,     0
6037, BEAM  ,    6,   702,   187,   204,     0,     0
6038, BEAM  ,    6,   701,   186,   253,     0,     0
6039, BEAM  ,    6,   702,   253,   204,     0,     0
6040, BEAM  ,    6,   702,   204,   112,     0,     0
6041, BEAM  ,    6,   702,   112,   113,     0,     0
6042, BEAM  ,    6,   702,   113,   114,     0,     0
6043, BEAM  ,    6,   702,   114,   239,     0,     0
6044, BEAM  ,    6,   704,   239,   241,     0,     0
6045, BEAM  ,    6,   704,   241,   189,     0,     0
6098, BEAM  ,    6,   707,   451,   452,     0,     0
6099, BEAM  ,    6,   707,   453,   454,     0,     0
6100, BEAM  ,    6,   708,   454,   452,     0,     0
6101, BEAM  ,    6,   708,   452,   208,     0,     0
6102, BEAM  ,    6,   708,   455,   454,     0,     0
6103, BEAM  ,    6,   708,   205,   455,     0,     0
6104, BEAM  ,    1,   700,    43,   107,     0,     0
6105, BEAM  ,    6,   701,   457,   108,     0,     0
6106, BEAM  ,    6,   701,   553,   107,     0,     0
6107, BEAM  ,    1,     3,   456,   521,     0,     0
6114, BEAM  ,    2,   108,   466,   469,    90,     0
6117, BEAM  ,    2,   108,   469,   186,    90,     0
6151, BEAM  ,    4,     8,   497,   500,     0,     0
6152, BEAM  ,    4,     9,   498,   501,     0,     0
6153, BEAM  ,    4,    10,   499,   502,     0,     0
6154, BEAM  ,    4,     8,   500,   112,     0,     0
6155, BEAM  ,    4,     9,   501,   113,     0,     0
6156, BEAM  ,    4,    10,   502,   114,     0,     0
6157, BEAM  ,    4,   710,   500,   505,     0,     0
6158, BEAM  ,    4,   710,   501,   503,     0,     0
6159, BEAM  ,    3,   710,   503,   506,     0,     0
6160, BEAM  ,    4,   710,   504,   501,     0,     0
6161, BEAM  ,    3,   710,   505,   504,     0,     0
6162, BEAM  ,    4,   710,   506,   502,     0,     0
```

```
  6163, BEAM  ,    4,     7,   507,   509,     0,     0
  6164, BEAM  ,    4,   700,   508,   510,     0,     0
  6165, BEAM  ,    4,     7,   509,   111,     0,     0
  6166, BEAM  ,    4,   700,   510,   449,     0,     0
  6167, BEAM  ,    4,   710,   510,   512,     0,     0
  6168, BEAM  ,    4,   710,   511,   509,     0,     0
  6169, BEAM  ,    3,   710,   512,   511,     0,     0
  6170, BEAM  ,    2,     1,   513,   523,     0,     0
  6172, BEAM  ,    2,     4,   515,   525,     0,     0
  6173, BEAM  ,    2,     5,   516,   526,     0,     0
  6174, BEAM  ,    1,   104,   517,   527,    90,     0
  6175, BEAM  ,    2,   105,   518,   528,    90,     0
  6176, BEAM  ,    2,   106,   519,   529,    90,     0
  6177, BEAM  ,    2,     6,   520,   530,     0,     0
  6178, BEAM  ,    2,     3,   521,   531,     0,     0
  6179, BEAM  ,    2,   110,   522,   532,    90,     0
  6180, BEAM  ,    2,     1,   523,   103,     0,     0
  6182, BEAM  ,    2,     4,   525,   108,     0,     0
  6183, BEAM  ,    2,     5,   526,   109,     0,     0
  6184, BEAM  ,    1,   104,   527,   181,    90,     0
  6185, BEAM  ,    2,   105,   528,   183,    90,     0
  6186, BEAM  ,    2,   106,   529,   184,    90,     0
  6187, BEAM  ,    2,     6,   530,   251,     0,     0
  6188, BEAM  ,    2,     3,   531,   457,     0,     0
  6189, BEAM  ,    2,   110,   532,   188,    90,     0
  6190, BEAM  ,    2,   712,   527,   539,     0,     0
  6191, BEAM  ,    2,   712,   529,   541,     0,     0
  6192, BEAM  ,    2,   712,   531,   538,     0,     0
  6193, BEAM  ,    2,   712,   523,   535,     0,     0
  6194, BEAM  ,    2,   712,   526,   533,     0,     0
  6195, BEAM  ,    1,   712,   533,   534,     0,     0
  6196, BEAM  ,    2,   712,   534,   530,     0,     0
  6197, BEAM  ,    1,   712,   535,   536,     0,     0
  6198, BEAM  ,    4,   712,   536,   556,     0,     0
  6199, BEAM  ,    2,   712,   537,   525,     0,     0
  6200, BEAM  ,    1,   712,   538,   537,     0,     0
  6201, BEAM  ,    1,   712,   539,   540,     0,     0
  6202, BEAM  ,    2,   712,   540,   528,     0,     0
  6203, BEAM  ,    1,   712,   541,   542,     0,     0
  6204, BEAM  ,    2,   712,   542,   532,     0,     0
  6205, BEAM  ,    2,   103,   543,   546,    90,     0
  6206, BEAM  ,    2,   107,   544,   547,    90,     0
  6207, BEAM  ,    2,   109,   545,   548,    90,     0
  6208, BEAM  ,    2,   103,   546,   180,    90,     0
  6209, BEAM  ,    2,   107,   547,   185,    90,     0
  6210, BEAM  ,    2,   109,   548,   187,    90,     0
  6211, BEAM  ,    2,   710,   546,   549,     0,     0
  6212, BEAM  ,    2,   710,   547,   551,     0,     0
  6213, BEAM  ,    1,   710,   549,   550,     0,     0
  6214, BEAM  ,    2,   710,   550,   547,     0,     0
  6215, BEAM  ,    1,   710,   551,   552,     0,     0
  6216, BEAM  ,    2,   710,   552,   548,     0,     0
  6218, BEAM  ,    3,    11,   554,   555,     0,     0
  6219, BEAM  ,    4,    11,   555,   556,     0,     0
  6220, BEAM  ,    4,    11,   556,   553,     0,     0

*GROUP    ; Group
; NAME, NODE_LIST, ELEM_LIST, PLANE_TYPE
   Midas     , , , 0
   SPUTTANATI, , , 0
   P2-P3 CA  , , , 0
   Linee sezione (D), , , 0
```

```
*BNDR-GROUP    ; Boundary Group
; NAME, AUTOTYPE
 fasce, 0
 pilastrini, 0

*MATERIAL    ; Material
; iMAT, TYPE, MNAME, SPHEAT, HEATCO, PLAST, TUNIT, bMASS, DAMPRATIO, [DATA1]
 ; STEEL, CONC, ALUMINUM, USER
; iMAT, TYPE, MNAME, SPHEAT, HEATCO, PLAST, TUNIT, bMASS, DAMPRATIO, [DATA2], [DATA2]
 ; SRC
; [DATA1] : 1, STANDARD, CODE/PRODUCT, DB, USEELAST, ELAST
; [DATA1] : 2, ELAST, POISN, THERMAL, DEN, MASS
; [DATA1] : 3, Ex, Ey, Ez, Tx, Ty, Tz, Sxy, Sxz, Syz, Pxy, Pxz, Pyz, DEN, MASS
 ; Orthotropic
; [DATA2] : 1, STANDARD, CODE/PRODUCT, DB, USEELAST, ELAST or 2, ELAST, POISN, THERMAL
, DEN, MASS
    1, USER , MA                , 0, 0, , C, NO, 0.05, 2, 1.5000e+006,  0.45, 0.0000e+
000,    18,     0
    2, USER , MA rigid          , 0, 0, , C, NO, 0.05, 2, 1.5000e+008,  0.45, 0.0000e+
000,     9,     0
    3, USER , MB                , 0, 0, , C, NO, 0.05, 2, 4.5000e+006,  0.45, 0.0000e+
000,    12,     0
    4, USER , MB rigid          , 0, 0, , C, NO, 0.05, 2, 4.5000e+008,  0.45, 0.0000e+
000,     6,     0
    5, USER , C16/20rigid       , 0, 0, , C, NO, 0, 2, 2.8607e+009,   0.2, 0.0000e+000
,    25,     0
    6, CONC , C16/20            , 0, 0, , C, NO, 0.05, 1, EN04(RC)   ,            , C1
6/20        , NO, 2.8607e+007

*MATL-COLOR
; iMAT, W_R, W_G, W_B, HF_R, HF_G, HF_B, HE_R, HE_G, HE_B, bBLEND, FACT
    1,   0,   0,   0,  255, 128,   0,    0,   0,   0,  NO, 0.5
    2,   0,   0,   0,  255, 128, 128,    0,   0,   0,  NO, 0.5
    3,   0,   0,   0,    0, 128,   0,    0,   0,   0,  NO, 0.5
    4,   0,   0,   0,    0, 206, 103,    0,   0,   0,  NO, 0.5
    5, 128,   0, 128,  255,   0,   0,    0, 255,   0,  NO, 0.5
    6,   0,   0,   0,  192, 192, 192,    0,   0,   0,  NO, 0.5


*SECTION    ; Section
; iSEC, TYPE, SNAME, [OFFSET], bSD, bWE, SHAPE, [DATA1], [DATA2]                    ;
1st line - DB/USER
; iSEC, TYPE, SNAME, [OFFSET], bSD, bWE, SHAPE, BLT, D1, ..., D8, iCEL              ;
1st line - VALUE
;       AREA, ASy, ASz, Ixx, Iyy, Izz                                               ;
2nd line
;       CyP, CyM, CzP, CzM, QyB, QzB, PERI_OUT, PERI_IN, Cy, Cz                     ;
3rd line
;       Y1, Y2, Y3, Y4, Z1, Z2, Z3, Z4, Zyy, Zzz                                    ;
4th line
; iSEC, TYPE, SNAME, [OFFSET], bSD, bWE, SHAPE, ELAST, DEN, POIS, POIC, SF, THERMAL ;
1st line - SRC
;       D1, D2, [SRC]                                                               ;
2nd line
; iSEC, TYPE, SNAME, [OFFSET], bSD, bWE, SHAPE, 1, DB, NAME1, NAME2, D1, D2         ;
1st line - COMBINED
; iSEC, TYPE, SNAME, [OFFSET], bSD, bWE, SHAPE, 2, D11, D12, D13, D14, D15, D21, D22,
D23, D24
; iSEC, TYPE, SNAME, [OFFSET2], bSD, bWE, SHAPE, iyVAR, izVAR, STYPE                ;
1st line - TAPERED
;       DB, NAME1, NAME2                                                            ;
```

```
2nd line(STYPE=DB)
;       [DIM1], [DIM2]                                                          ;
2nd line(STYPE=USER)
;       D11, D12, D13, D14, D15, D16, D17, D18                                  ;
2nd line(STYPE=VALUE)
;       AREA1, ASy1, ASz1, Ixx1, Iyy1, Izz1                                     ;
3rd line(STYPE=VALUE)
;       CyP1, CyM1, CzP1, CzM1, QyB1, QzB1, PERI_OUT1, PERI_IN1, Cy1, Cz1       ;
4th line(STYPE=VALUE)
;       Y11, Y12, Y13, Y14, Z11, Z12, Z13, Z14, Zyy1, Zyy2                      ;
5th line(STYPE=VALUE)
;       D21, D22, D23, D24, D25, D26, D27, D28                                  ;
6th line(STYPE=VALUE)
;       AREA2, ASy2, ASz2, Ixx2, Iyy2, Izz2                                     ;
7th line(STYPE=VALUE)
;       CyP2, CyM2, CzP2, CzM2, QyB2, QzB2, PERI_OUT2, PERI_IN2, Cy2, Cz2       ;
8th line(STYPE=VALUE)
;       Y21, Y22, Y23, Y24, Z21, Z22, Z23, Z24, Zyy2, Zzz2                      ;
9th line(STYPE=VALUE)
; iSEC, TYPE, SNAME, [OFFSET], bSD, bWE, SHAPE                                  ;
1st line - COMPOSITE-B
;       Hw, tw, B1, Bf1, tf1, B2, Bf2, tf2                                      ;
2nd line
;       [SHAPE-NUM], [STIFF-SHAPE], [STIFF-POS] (1~4)                           ;
3rd line
;       SW, GN, CTC, Bc, Tc, Hh, EsEc, DsDc, Ps, Pc, TsTc, bMulti, Elong, Esh   ;
4th line
; iSEC, TYPE, SNAME, [OFFSET], bSD, bWE, SHAPE                                  ;
1st line - COMPOSITE-I
;       Hw, tw, B1, tf1, B2, tf2                                                ;
2nd line
;       [SHAPE-NUM], [STIFF-SHAPE], [STIFF-POS] (1~2)                           ;
3rd line
;       SW, GN, CTC, Bc, Tc, Hh, EsEc, DsDc, Ps, Pc, TsTc, bMulti, Elong, Esh   ;
4th line
; iSEC, TYPE, SNAME, [OFFSET], bSD, bWE, SHAPE                                  ;
1st line - COMPOSITE-TUB
;       Hw, tw, B1, Bf1, tf1, B2, Bf2, tf2, Bf3, tfp                            ;
2nd line
;       [SHAPE-NUM], [STIFF-SHAPE], [STIFF-POS] (1~3)                           ;
3rd line
;       SW, GN, CTC, Bc, Tc, Hh, EsEc, DsDc, Ps, Pc, TsTc, bMulti, Elong, Esh   ;
4th line
; [DATA1] : 1, DB, NAME or 2, D1, D2, D3, D4, D5, D6, D7, D8, D9, D10
; [DATA2] : CCSHAPE or iCEL or iN1, iN2
; [SRC]  : 1, DB, NAME1, NAME2 or 2, D1, D2, D3, D4, D5, D6, D7, D8, D9, D10, iN1, iN2
; [DIM1], [DIM2] : D1, D2, D3, D4, D5, D6, D7, D8
; [OFFSET] : OFFSET, iCENT, iREF, iHORZ, HUSER, iVERT, VUSER
; [OFFSET2]: OFFSET, iCENT, iREF, iHORZ, HUSERI, HUSERJ, iVERT, VUSERI, VUSERJ
; [SHAPE-NUM]: SHAPE-NUM, POS, STIFF-NUM1, STIFF-NUM2, STIFF-NUM3, STIFF-NUM4
; [STIFF-SHAPE]: SHAPE-NUM, for(SHAPE-NUM) { NAME, SIZE1~8 }
; [STIFF-POS]: STIFF-NUM, for(STIFF-NUM) { SPACING, iSHAPE, bCALC }
    1, DBUSER    , L0_X1             , CC, 0, 0, 0, 0, 0, 0, YES, NO, SB , 2, 1.93, 0.
36, 0, 0, 0, 0, 0, 0, 0, 0
    2, DBUSER    , L0_X2             , CC, 0, 0, 0, 0, 0, 0, YES, NO, SB , 2, 0.65, 0.
36, 0, 0, 0, 0, 0, 0, 0, 0
    3, DBUSER    , L0_X2bis          , CC, 0, 0, 0, 0, 0, 0, YES, NO, SB , 2, 1.225, 0
.36, 0, 0, 0, 0, 0, 0, 0, 0
    4, DBUSER    , L0_X3             , CC, 0, 0, 0, 0, 0, 0, YES, NO, SB , 2, 1.83, 0.
36, 0, 0, 0, 0, 0, 0, 0, 0
    5, DBUSER    , L0_X4             , CC, 0, 0, 0, 0, 0, 0, YES, NO, SB , 2, 1.25, 0.
36, 0, 0, 0, 0, 0, 0, 0, 0
```

```
    6, DBUSER    , L0_X5            , CC, 0, 0, 0, 0, 0, 0, YES, NO, SB , 2, 0.47, 0.
36, 0, 0, 0, 0, 0, 0, 0, 0
    7, DBUSER    , L0_X6            , CC, 0, 0, 0, 0, 0, 0, YES, NO, SB , 2, 4.68, 0.
25, 0, 0, 0, 0, 0, 0, 0, 0
    8, DBUSER    , L0_X7            , CC, 0, 0, 0, 0, 0, 0, YES, NO, SB , 2, 1.53, 0.
25, 0, 0, 0, 0, 0, 0, 0, 0
    9, DBUSER    , L0_X8            , CC, 0, 0, 0, 0, 0, 0, YES, NO, SB , 2, 1.75, 0.
25, 0, 0, 0, 0, 0, 0, 0, 0
   10, DBUSER    , L0_X9            , CC, 0, 0, 0, 0, 0, 0, YES, NO, SB , 2, 1.33, 0.
25, 0, 0, 0, 0, 0, 0, 0, 0
   11, DBUSER    , L0_X10           , CC, 0, 0, 0, 0, 0, 0, YES, NO, SB , 2, 1.88, 0.
36, 0, 0, 0, 0, 0, 0, 0, 0
   12, DBUSER    , L0_X11           , CC, 0, 0, 0, 0, 0, 0, YES, NO, SB , 2, 2.95, 0.
36, 0, 0, 0, 0, 0, 0, 0, 0
   13, DBUSER    , L0_X12           , CC, 0, 0, 0, 0, 0, 0, YES, NO, SB , 2, 1.63, 0.
36, 0, 0, 0, 0, 0, 0, 0, 0
   14, DBUSER    , L0_X13           , CC, 0, 0, 0, 0, 0, 0, YES, NO, SB , 2, 0.75, 0.
25, 0, 0, 0, 0, 0, 0, 0, 0
   15, DBUSER    , L0_X14           , CC, 0, 0, 0, 0, 0, 0, YES, NO, SB , 2, 4.47, 0.
25, 0, 0, 0, 0, 0, 0, 0, 0
   16, DBUSER    , L0_X15           , CC, 0, 0, 0, 0, 0, 0, YES, NO, SB , 2, 4.83, 0.
25, 0, 0, 0, 0, 0, 0, 0, 0
   17, DBUSER    , L0_X16           , CC, 0, 0, 0, 0, 0, 0, YES, NO, SB , 2, 0.3, 0.3
6, 0, 0, 0, 0, 0, 0, 0, 0
   18, DBUSER    , L0_X17           , CC, 0, 0, 0, 0, 0, 0, YES, NO, SB , 2, 0.5, 0.3
6, 0, 0, 0, 0, 0, 0, 0, 0
   19, DBUSER    , L0_X18           , CC, 0, 0, 0, 0, 0, 0, YES, NO, SB , 2, 0.65, 0.
36, 0, 0, 0, 0, 0, 0, 0, 0
   22, DBUSER    , L0_X21           , CC, 0, 0, 0, 0, 0, 0, YES, NO, SB , 2, 3.68, 0.
25, 0, 0, 0, 0, 0, 0, 0, 0
   23, DBUSER    , L0_X22           , CC, 0, 0, 0, 0, 0, 0, YES, NO, SB , 2, 1.6, 0.2
5, 0, 0, 0, 0, 0, 0, 0, 0
   24, DBUSER    , L0_X23           , CC, 0, 0, 0, 0, 0, 0, YES, NO, SB , 2, 3.77, 0.
25, 0, 0, 0, 0, 0, 0, 0, 0
   25, DBUSER    , L0_X24           , CC, 0, 0, 0, 0, 0, 0, YES, NO, SB , 2, 0.95, 0.
25, 0, 0, 0, 0, 0, 0, 0, 0
   26, DBUSER    , L0_X25           , CC, 0, 0, 0, 0, 0, 0, YES, NO, SB , 2, 6.45, 0.
25, 0, 0, 0, 0, 0, 0, 0, 0
   27, DBUSER    , L0_X26           , CC, 0, 0, 0, 0, 0, 0, YES, NO, SB , 2, 4.83, 0.
25, 0, 0, 0, 0, 0, 0, 0, 0
   28, DBUSER    , L0_X27           , CC, 0, 0, 0, 0, 0, 0, YES, NO, SB , 2, 0.97, 0.
36, 0, 0, 0, 0, 0, 0, 0, 0
   29, DBUSER    , L0_X28           , CC, 0, 0, 0, 0, 0, 0, YES, NO, SB , 2, 1.19, 0.
36, 0, 0, 0, 0, 0, 0, 0, 0
   30, DBUSER    , L0_X29           , CC, 0, 0, 0, 0, 0, 0, YES, NO, SB , 2, 1, 0.36,
 0, 0, 0, 0, 0, 0, 0, 0
   31, DBUSER    , L0_X30           , CC, 0, 0, 0, 0, 0, 0, YES, NO, SB , 2, 0.29, 0.
36, 0, 0, 0, 0, 0, 0, 0, 0
   32, DBUSER    , L0_X31           , CC, 0, 0, 0, 0, 0, 0, YES, NO, SB , 2, 0.19, 0.
36, 0, 0, 0, 0, 0, 0, 0, 0
   33, DBUSER    , L0_X32           , CC, 0, 0, 0, 0, 0, 0, YES, NO, SB , 2, 0.29, 0.
36, 0, 0, 0, 0, 0, 0, 0, 0
   34, DBUSER    , L0_X33           , CC, 0, 0, 0, 0, 0, 0, YES, NO, SB , 2, 1.29, 0.
36, 0, 0, 0, 0, 0, 0, 0, 0
   35, DBUSER    , L0_X33bis        , CC, 0, 0, 0, 0, 0, 0, YES, NO, SB , 2, 0.95, 0.
36, 0, 0, 0, 0, 0, 0, 0, 0
   36, DBUSER    , L0_X34           , CC, 0, 0, 0, 0, 0, 0, YES, NO, SB , 2, 1.55, 0.
36, 0, 0, 0, 0, 0, 0, 0, 0
   37, DBUSER    , L0_X35           , CC, 0, 0, 0, 0, 0, 0, YES, NO, SB , 2, 6.35, 0.
36, 0, 0, 0, 0, 0, 0, 0, 0
   38, DBUSER    , L0_X22bis        , CC, 0, 0, 0, 0, 0, 0, YES, NO, SB , 2, 1.28, 0.
25, 0, 0, 0, 0, 0, 0, 0, 0
```

```
  100, DBUSER    , L0_Y01            , CC, 0, 0, 0, 0, 0, 0, YES, NO, SB , 2, 7.4, 0.3
6, 0, 0, 0, 0, 0, 0, 0, 0
  101, DBUSER    , L0_Y02            , CC, 0, 0, 0, 0, 0, 0, YES, NO, SB , 2, 1.62, 0.
25, 0, 0, 0, 0, 0, 0, 0, 0
  102, DBUSER    , L0_Y02bis         , CC, 0, 0, 0, 0, 0, 0, YES, NO, SB , 2, 2.18, 0.
25, 0, 0, 0, 0, 0, 0, 0, 0
  103, DBUSER    , L0_Y02tris        , CC, 0, 0, 0, 0, 0, 0, YES, NO, SB , 2, 3.55, 0.
25, 0, 0, 0, 0, 0, 0, 0, 0
  104, DBUSER    , L0_Y03            , CC, 0, 0, 0, 0, 0, 0, YES, NO, SB , 2, 1.54, 0.
36, 0, 0, 0, 0, 0, 0, 0, 0
  105, DBUSER    , L0_Y04            , CC, 0, 0, 0, 0, 0, 0, YES, NO, SB , 2, 1.2, 0.3
6, 0, 0, 0, 0, 0, 0, 0, 0
  106, DBUSER    , L0_Y04bis         , CC, 0, 0, 0, 0, 0, 0, YES, NO, SB , 2, 0.59, 0.
36, 0, 0, 0, 0, 0, 0, 0, 0
  107, DBUSER    , L0_Y05            , CC, 0, 0, 0, 0, 0, 0, YES, NO, SB , 2, 1.25, 0.
25, 0, 0, 0, 0, 0, 0, 0, 0
  108, DBUSER    , L0_Y06            , CC, 0, 0, 0, 0, 0, 0, YES, NO, SB , 2, 1.15, 0.
36, 0, 0, 0, 0, 0, 0, 0, 0
  109, DBUSER    , L0_Y07            , CC, 0, 0, 0, 0, 0, 0, YES, NO, SB , 2, 1.18, 0.
25, 0, 0, 0, 0, 0, 0, 0, 0
  110, DBUSER    , L0_Y08            , CC, 0, 0, 0, 0, 0, 0, YES, NO, SB , 2, 2.75, 0.
36, 0, 0, 0, 0, 0, 0, 0, 0
  111, DBUSER    , L0_Y09            , CC, 0, 0, 0, 0, 0, 0, YES, NO, SB , 2, 6.43, 0.
25, 0, 0, 0, 0, 0, 0, 0, 0
  112, DBUSER    , L0_Y10            , CC, 0, 0, 0, 0, 0, 0, YES, NO, SB , 2, 6.43, 0.
25, 0, 0, 0, 0, 0, 0, 0, 0
  113, DBUSER    , L0_Y11            , CC, 0, 0, 0, 0, 0, 0, YES, NO, SB , 2, 6.43, 0.
36, 0, 0, 0, 0, 0, 0, 0, 0
  114, DBUSER    , L0_Y12            , CC, 0, 0, 0, 0, 0, 0, YES, NO, SB , 2, 0.84, 0.
36, 0, 0, 0, 0, 0, 0, 0, 0
  115, DBUSER    , L0_Y13            , CC, 0, 0, 0, 0, 0, 0, YES, NO, SB , 2, 0.83, 0.
25, 0, 0, 0, 0, 0, 0, 0, 0
  116, DBUSER    , L0_Y14            , CC, 0, 0, 0, 0, 0, 0, YES, NO, SB , 2, 2.55, 0.
36, 0, 0, 0, 0, 0, 0, 0, 0
  117, DBUSER    , L0 Y14bis         , CC, 0, 0, 0, 0, 0, 0, YES, NO, SB , 2, 4.11, 0.
25, 0, 0, 0, 0, 0, 0, 0, 0
  118, DBUSER    , L0_Y15            , CC, 0, 0, 0, 0, 0, 0, YES, NO, SB , 2, 1.37, 0.
36, 0, 0, 0, 0, 0, 0, 0, 0
  119, DBUSER    , L0_Y16            , CC, 0, 0, 0, 0, 0, 0, YES, NO, SB , 2, 5.61, 0.
36, 0, 0, 0, 0, 0, 0, 0, 0
  120, DBUSER    , L0 Y17            , CC, 0, 0, 0, 0, 0, 0, YES, NO, SB , 2, 4.69, 0.
25, 0, 0, 0, 0, 0, 0, 0, 0
  121, DBUSER    , L0_Y17bis         , CC, 0, 0, 0, 0, 0, 0, YES, NO, SB , 2, 1.35, 0.
25, 0, 0, 0, 0, 0, 0, 0, 0
  122, DBUSER    , L0_Y18            , CC, 0, 0, 0, 0, 0, 0, YES, NO, SB , 2, 1.79, 0.
36, 0, 0, 0, 0, 0, 0, 0, 0
  700, DBUSER    , Pilastro fitt     , CC, 0, 0, 0, 0, 0, 0, YES, NO, SB , 2, 0.248, 0
.248, 0, 0, 0, 0, 0, 0, 0, 0
  701, DBUSER    , cordolo 40x21     , CC, 0, 0, 0, 0, 0, 0, YES, NO, SB , 2, 0.21, 0.
4, 0, 0, 0, 0, 0, 0, 0, 0
  702, DBUSER    , cordolo 30x21     , CC, 0, 0, 0, 0, 0, 0, YES, NO, SB , 2, 0.21, 0.
3, 0, 0, 0, 0, 0, 0, 0, 0
  703, DBUSER    , cordolo RIGID     , CC, 0, 0, 0, 0, 0, 0, YES, NO, SB , 2, 0.2, 0.4
, 0, 0, 0, 0, 0, 0, 0, 0
  704, DBUSER    , cordolo fitt      , CC, 0, 0, 0, 0, 0, 0, YES, NO, SB , 2, 0.21, 0.
3, 0, 0, 0, 0, 0, 0, 0, 0
  707, DBUSER    , Pilastro 50x25    , CC, 0, 0, 0, 0, 0, 0, YES, NO, SB , 2, 0.5, 0.2
5, 0, 0, 0, 0, 0, 0, 0, 0
  708, DBUSER    , Trave             , CC, 0, 0, 0, 0, 0, 0, YES, NO, SB , 2, 0.25, 0.
55, 0, 0, 0, 0, 0, 0, 0, 0
  709, DBUSER    , Fascia 0.60x0.36  , CC, 0, 0, 0, 0, 0, 0, YES, NO, SB , 2, 0.6, 0.3
6, 0, 0, 0, 0, 0, 0, 0, 0
```

```
  710, DBUSER    , Fascia 1.45x0.25  , CC, 0, 0, 0, 0, 0, 0, YES, NO, SB , 2, 1.45, 0.
25, 0, 0, 0, 0, 0, 0, 0, 0
  711, DBUSER    , Fascia 0.95x0.25  , CC, 0, 0, 0, 0, 0, 0, YES, NO, SB , 2, 0.95, 0.
25, 0, 0, 0, 0, 0, 0, 0, 0
  712, DBUSER    , Fascia 0.45x0.36  , CC, 0, 0, 0, 0, 0, 0, YES, NO, SB , 2, 0.45, 0.
36, 0, 0, 0, 0, 0, 0, 0, 0
 1000, DBUSER    , LINE              , CC, 0, 0, 0, 0, 0, 0, YES, NO, SB , 2, 0.01, 0.
01, 0, 0, 0, 0, 0, 0, 0, 0

*SECT-COLOR
; iSEC, W_R, W_G, W_B, HF_R, HF_G, HF_B, HE_R, HE_G, HE_B, bBLEND, FACT
    1, 128,   0, 128,  255,   0,   0,    0, 255,   0,  NO, 0.5
    2, 128,   0, 128,  255,   0,   0,    0, 255,   0,  NO, 0.5
    3, 128,   0, 128,  255,   0,   0,    0, 255,   0,  NO, 0.5
    4, 128,   0, 128,  255,   0,   0,    0, 255,   0,  NO, 0.5
    5, 128,   0, 128,  255,   0,   0,    0, 255,   0,  NO, 0.5
    6, 128,   0, 128,  255,   0,   0,    0, 255,   0,  NO, 0.5
    7, 128,   0, 128,  255,   0,   0,    0, 255,   0,  NO, 0.5
    8, 128,   0, 128,  255,   0,   0,    0, 255,   0,  NO, 0.5
    9, 128,   0, 128,  255,   0,   0,    0, 255,   0,  NO, 0.5
   10, 128,   0, 128,  255,   0,   0,    0, 255,   0,  NO, 0.5
   11, 128,   0, 128,  255,   0,   0,    0, 255,   0,  NO, 0.5
   12, 128,   0, 128,  255,   0,   0,    0, 255,   0,  NO, 0.5
   13, 128,   0, 128,  255,   0,   0,    0, 255,   0,  NO, 0.5
   14, 128,   0, 128,  255,   0,   0,    0, 255,   0,  NO, 0.5
   15, 128,   0, 128,  255,   0,   0,    0, 255,   0,  NO, 0.5
   16, 128,   0, 128,  255,   0,   0,    0, 255,   0,  NO, 0.5
   17, 128,   0, 128,  255,   0,   0,    0, 255,   0,  NO, 0.5
   18, 128,   0, 128,  255,   0,   0,    0, 255,   0,  NO, 0.5
   19, 128,   0, 128,  255,   0,   0,    0, 255,   0,  NO, 0.5
   22, 128,   0, 128,  255,   0,   0,    0, 255,   0,  NO, 0.5
   23, 128,   0, 128,  255,   0,   0,    0, 255,   0,  NO, 0.5
   24, 128,   0, 128,  255,   0,   0,    0, 255,   0,  NO, 0.5
   25, 128,   0, 128,  255,   0,   0,    0, 255,   0,  NO, 0.5
   26, 128,   0, 128,  255,   0,   0,    0, 255,   0,  NO, 0.5
   27, 128,   0, 128,  255,   0,   0,    0, 255,   0,  NO, 0.5
   28, 128,   0, 128,  255,   0,   0,    0, 255,   0,  NO, 0.5
   29, 128,   0, 128,  255,   0,   0,    0, 255,   0,  NO, 0.5
   30, 128,   0, 128,  255,   0,   0,    0, 255,   0,  NO, 0.5
   31, 128,   0, 128,  255,   0,   0,    0, 255,   0,  NO, 0.5
   32, 128,   0, 128,  255,   0,   0,    0, 255,   0,  NO, 0.5
   33, 128,   0, 128,  255,   0,   0,    0, 255,   0,  NO, 0.5
   34, 128,   0, 128,  255,   0,   0,    0, 255,   0,  NO, 0.5
   35, 128,   0, 128,  255,   0,   0,    0, 255,   0,  NO, 0.5
   36, 128,   0, 128,  255,   0,   0,    0, 255,   0,  NO, 0.5
   37, 128,   0, 128,  255,   0,   0,    0, 255,   0,  NO, 0.5
   38, 128,   0, 128,  255,   0,   0,    0, 255,   0,  NO, 0.5
  100, 128,   0, 128,  255,   0,   0,    0, 255,   0,  NO, 0.5
  101, 128,   0, 128,  255,   0,   0,    0, 255,   0,  NO, 0.5
  102, 128,   0, 128,  255,   0,   0,    0, 255,   0,  NO, 0.5
  103, 128,   0, 128,  255,   0,   0,    0, 255,   0,  NO, 0.5
  104, 128,   0, 128,  255,   0,   0,    0, 255,   0,  NO, 0.5
  105, 128,   0, 128,  255,   0,   0,    0, 255,   0,  NO, 0.5
  106, 128,   0, 128,  255,   0,   0,    0, 255,   0,  NO, 0.5
  107, 128,   0, 128,  255,   0,   0,    0, 255,   0,  NO, 0.5
  108, 128,   0, 128,  255,   0,   0,    0, 255,   0,  NO, 0.5
  109, 128,   0, 128,  255,   0,   0,    0, 255,   0,  NO, 0.5
  110, 128,   0, 128,  255,   0,   0,    0, 255,   0,  NO, 0.5
  111, 128,   0, 128,  255,   0,   0,    0, 255,   0,  NO, 0.5
  112, 128,   0, 128,  255,   0,   0,    0, 255,   0,  NO, 0.5
  113, 128,   0, 128,  255,   0,   0,    0, 255,   0,  NO, 0.5
  114, 128,   0, 128,  255,   0,   0,    0, 255,   0,  NO, 0.5
```

```
  115, 128,   0, 128,  255,   0,   0,    0, 255,   0,  NO, 0.5
  116, 128,   0, 128,  255,   0,   0,    0, 255,   0,  NO, 0.5
  117, 128,   0, 128,  255,   0,   0,    0, 255,   0,  NO, 0.5
  118, 128,   0, 128,  255,   0,   0,    0, 255,   0,  NO, 0.5
  119, 128,   0, 128,  255,   0,   0,    0, 255,   0,  NO, 0.5
  120, 128,   0, 128,  255,   0,   0,    0, 255,   0,  NO, 0.5
  121, 128,   0, 128,  255,   0,   0,    0, 255,   0,  NO, 0.5
  122, 128,   0, 128,  255,   0,   0,    0, 255,   0,  NO, 0.5
  700, 128,   0, 128,  255,   0,   0,    0, 255,   0,  NO, 0.5
  701, 128,   0, 128,  255,   0,   0,    0, 255,   0,  NO, 0.5
  702, 128,   0, 128,  255,   0,   0,    0, 255,   0,  NO, 0.5
  703, 128,   0, 128,  255,   0,   0,    0, 255,   0,  NO, 0.5
  704, 128,   0, 128,  255,   0,   0,    0, 255,   0,  NO, 0.5
  707, 128,   0, 128,  255,   0,   0,    0, 255,   0,  NO, 0.5
  708, 128,   0, 128,  255,   0,   0,    0, 255,   0,  NO, 0.5
  709, 128,   0, 128,  255,   0,   0,    0, 255,   0,  NO, 0.5
  710, 128,   0, 128,  255,   0,   0,    0, 255,   0,  NO, 0.5
  711, 128,   0, 128,  255,   0,   0,    0, 255,   0,  NO, 0.5
  712, 128,   0, 128,  255,   0,   0,    0, 255,   0,  NO, 0.5
 1000, 128,   0, 128,  255,   0,   0,    0, 255,   0,  NO, 0.5

*SECT-SCALE    ; Section Stiffness Scale Factor
; iSEC, AREA_SF, ASY_SF, ASZ_SF, IXX_SF, IYY_SF, IZZ_SF, WGT_SF, GROUP, iPart ; line 1
  700, 1, 1, 1, 1, 1, 1, 0.001, , 1
  703, 1, 100, 100, 1, 100, 100, 1, , 1
  704, 1, 1, 1, 1, 1, 1, 0.001, , 1

*DGN-SECT
; iSEC, TYPE, SNAME, [OFFSET], bSD, bWE, SHAPE, [DATA1], [DATA2]                    ;
1st line - DB/USER
; iSEC, TYPE, SNAME, [OFFSET], bSD, bWE, SHAPE, BLT, D1, ..., D8, iCEL              ;
1st line - VALUE
;       AREA, ASy, ASz, Ixx, Iyy, Izz                                               ;
2nd line
;       CyP, CyM, CzP, CzM, QyB, QzB, PERI_OUT, PERI_IN, Cy, Cz                     ;
3rd line
;       Y1, Y2, Y3, Y4, Z1, Z2, Z3, Z4, Zyy, Zzz                                    ;
4th line
; iSEC, TYPE, SNAME, [OFFSET], bSD, bWE, SHAPE, ELAST, DEN, POIS, POIC, SF, THERMAL ;
1st line - SRC
;       D1, D2, [SRC]                                                               ;
2nd line
; iSEC, TYPE, SNAME, [OFFSET], bSD, bWE, SHAPE, 1, DB, NAME1, NAME2, D1, D2         ;
1st line - COMBINED
; iSEC, TYPE, SNAME, [OFFSET], bSD, bWE, SHAPE, 2, D11, D12, D13, D14, D15, D21, D22,
D23, D24
; iSEC, TYPE, SNAME, [OFFSET2], bSD, bWE, SHAPE, iyVAR, izVAR, STYPE                ;
1st line - TAPERED
;       DB, NAME1, NAME2                                                            ;
2nd line(STYPE=DB)
;       [DIM1], [DIM2]                                                              ;
2nd line(STYPE=USER)
;       D11, D12, D13, D14, D15, D16, D17, D18                                      ;
2nd line(STYPE=VALUE)
;       AREA1, ASy1, ASz1, Ixx1, Iyy1, Izz1                                         ;
3rd line(STYPE=VALUE)
;       CyP1, CyM1, CzP1, CzM1, QyB1, QzB1, PERI_OUT1, PERI_IN1, Cy1, Cz1           ;
4th line(STYPE=VALUE)
;       Y11, Y12, Y13, Y14, Z11, Z12, Z13, Z14, Zyy1, Zyy2                          ;
5th line(STYPE=VALUE)
;       D21, D22, D23, D24, D25, D26, D27, D28                                      ;
6th line(STYPE=VALUE)
```

```
;       AREA2, ASy2, ASz2, Ixx2, Iyy2, Izz2                                     ;
7th line(STYPE=VALUE)
;       CyP2, CyM2, CzP2, CzM2, QyB2, QzB2, PERI_OUT2, PERI_IN2, Cy2, Cz2       ;
8th line(STYPE=VALUE)
;       Y21, Y22, Y23, Y24, Z21, Z22, Z23, Z24, Zyy2, Zzz2                      ;
9th line(STYPE=VALUE)
; iSEC, TYPE, SNAME, [OFFSET], bSD, bWE, SHAPE                                  ;
1st line - COMPOSITE-B
;       Hw, tw, B1, Bf1, tf1, B2, Bf2, tf2                                      ;
2nd line
;       [SHAPE-NUM], [STIFF-SHAPE], [STIFF-POS] (1~4)                           ;
3rd line
;       SW, GN, CTC, Bc, Tc, Hh, EsEc, DsDc, Ps, Pc, TsTc, bMulti, Elong, Esh   ;
4th line
; iSEC, TYPE, SNAME, [OFFSET], bSD, bWE, SHAPE                                  ;
1st line - COMPOSITE-I
;       Hw, tw, B1, tf1, B2, tf2                                                ;
2nd line
;       [SHAPE-NUM], [STIFF-SHAPE], [STIFF-POS] (1~2)                           ;
3rd line
;       SW, GN, CTC, Bc, Tc, Hh, EsEc, DsDc, Ps, Pc, TsTc, bMulti, Elong, Esh   ;
4th line
; iSEC, TYPE, SNAME, [OFFSET], bSD, bWE, SHAPE                                  ;
1st line - COMPOSITE-TUB
;       Hw, tw, B1, Bf1, tf1, B2, Bf2, tf2, Bf3, tfp                            ;
2nd line
;       [SHAPE-NUM], [STIFF-SHAPE], [STIFF-POS] (1~3)                           ;
3rd line
;       SW, GN, CTC, Bc, Tc, Hh, EsEc, DsDc, Ps, Pc, TsTc, bMulti, Elong, Esh   ;
4th line
; [DATA1] : 1, DB, NAME or 2, D1, D2, D3, D4, D5, D6, D7, D8, D9, D10
; [DATA2] : CCSHAPE or iCEL or iN1, iN2
; [SRC]  : 1, DB, NAME1, NAME2 or 2, D1, D2, D3, D4, D5, D6, D7, D8, D9, D10, iN1, iN2
; [DIM1], [DIM2] : D1, D2, D3, D4, D5, D6, D7, D8
; [OFFSET] : OFFSET, iCENT, iREF, iHORZ, HUSER, iVERT, VUSER
; [OFFSET2]: OFFSET, iCENT, iREF, iHORZ, HUSERI, HUSERJ, iVERT, VUSERI, VUSERJ
; [SHAPE-NUM]: SHAPE-NUM, POS, STIFF-NUM1, STIFF-NUM2, STIFF-NUM3, STIFF-NUM4
; [STIFF-SHAPE]: SHAPE-NUM, for(SHAPE-NUM) { NAME, SIZE1~8 }
; [STIFF-POS]: STIFF-NUM, for(STIFF-NUM) { SPACING, iSHAPE, bCALC }
    1, DBUSER    , L0_X1            , CC, 0, 0, 0, 0, 0, 0, YES, NO, SB , 2, 1.93, 0.
36, 0, 0, 0, 0, 0, 0, 0, 0
    2, DBUSER    , L0_X2            , CC, 0, 0, 0, 0, 0, 0, YES, NO, SB , 2, 0.65, 0.
36, 0, 0, 0, 0, 0, 0, 0, 0
    3, DBUSER    , L0_X2bis         , CC, 0, 0, 0, 0, 0, 0, YES, NO, SB , 2, 1.225, 0
.36, 0, 0, 0, 0, 0, 0, 0, 0
    4, DBUSER    , L0_X3            , CC, 0, 0, 0, 0, 0, 0, YES, NO, SB , 2, 1.83, 0.
36, 0, 0, 0, 0, 0, 0, 0, 0
    5, DBUSER    , L0_X4            , CC, 0, 0, 0, 0, 0, 0, YES, NO, SB , 2, 1.25, 0.
36, 0, 0, 0, 0, 0, 0, 0, 0
    6, DBUSER    , L0_X5            , CC, 0, 0, 0, 0, 0, 0, YES, NO, SB , 2, 0.47, 0.
36, 0, 0, 0, 0, 0, 0, 0, 0
    7, DBUSER    , L0_X6            , CC, 0, 0, 0, 0, 0, 0, YES, NO, SB , 2, 4.68, 0.
25, 0, 0, 0, 0, 0, 0, 0, 0
    8, DBUSER    , L0_X7            , CC, 0, 0, 0, 0, 0, 0, YES, NO, SB , 2, 1.53, 0.
25, 0, 0, 0, 0, 0, 0, 0, 0
    9, DBUSER    , L0_X8            , CC, 0, 0, 0, 0, 0, 0, YES, NO, SB , 2, 1.75, 0.
25, 0, 0, 0, 0, 0, 0, 0, 0
   10, DBUSER    , L0_X9            , CC, 0, 0, 0, 0, 0, 0, YES, NO, SB , 2, 1.33, 0.
25, 0, 0, 0, 0, 0, 0, 0, 0
   11, DBUSER    , L0_X10           , CC, 0, 0, 0, 0, 0, 0, YES, NO, SB , 2, 1.88, 0.
36, 0, 0, 0, 0, 0, 0, 0, 0
   12, DBUSER    , L0_X11           , CC, 0, 0, 0, 0, 0, 0, YES, NO, SB , 2, 2.95, 0.
```

```
36, 0, 0, 0, 0, 0, 0, 0, 0
   13, DBUSER    , L0_X12            , CC, 0, 0, 0, 0, 0, 0, YES, NO, SB , 2, 1.63, 0.
36, 0, 0, 0, 0, 0, 0, 0, 0
   14, DBUSER    , L0_X13            , CC, 0, 0, 0, 0, 0, 0, YES, NO, SB , 2, 0.75, 0.
25, 0, 0, 0, 0, 0, 0, 0, 0
   15, DBUSER    , L0_X14            , CC, 0, 0, 0, 0, 0, 0, YES, NO, SB , 2, 4.47, 0.
25, 0, 0, 0, 0, 0, 0, 0, 0
   16, DBUSER    , L0_X15            , CC, 0, 0, 0, 0, 0, 0, YES, NO, SB , 2, 4.83, 0.
25, 0, 0, 0, 0, 0, 0, 0, 0
   17, DBUSER    , L0_X16            , CC, 0, 0, 0, 0, 0, 0, YES, NO, SB , 2, 0.3, 0.3
6, 0, 0, 0, 0, 0, 0, 0, 0
   18, DBUSER    , L0_X17            , CC, 0, 0, 0, 0, 0, 0, YES, NO, SB , 2, 0.5, 0.3
6, 0, 0, 0, 0, 0, 0, 0, 0
   19, DBUSER    , L0_X18            , CC, 0, 0, 0, 0, 0, 0, YES, NO, SB , 2, 0.65, 0.
36, 0, 0, 0, 0, 0, 0, 0, 0
   22, DBUSER    , L0_X21            , CC, 0, 0, 0, 0, 0, 0, YES, NO, SB , 2, 3.68, 0.
25, 0, 0, 0, 0, 0, 0, 0, 0
   23, DBUSER    , L0_X22            , CC, 0, 0, 0, 0, 0, 0, YES, NO, SB , 2, 1.6, 0.2
5, 0, 0, 0, 0, 0, 0, 0, 0
   24, DBUSER    , L0_X23            , CC, 0, 0, 0, 0, 0, 0, YES, NO, SB , 2, 3.77, 0.
25, 0, 0, 0, 0, 0, 0, 0, 0
   25, DBUSER    , L0_X24            , CC, 0, 0, 0, 0, 0, 0, YES, NO, SB , 2, 0.95, 0.
25, 0, 0, 0, 0, 0, 0, 0, 0
   26, DBUSER    , L0_X25            , CC, 0, 0, 0, 0, 0, 0, YES, NO, SB , 2, 6.45, 0.
25, 0, 0, 0, 0, 0, 0, 0, 0
   27, DBUSER    , L0_X26            , CC, 0, 0, 0, 0, 0, 0, YES, NO, SB , 2, 4.83, 0.
25, 0, 0, 0, 0, 0, 0, 0, 0
   28, DBUSER    , L0_X27            , CC, 0, 0, 0, 0, 0, 0, YES, NO, SB , 2, 0.97, 0.
36, 0, 0, 0, 0, 0, 0, 0, 0
   29, DBUSER    , L0_X28            , CC, 0, 0, 0, 0, 0, 0, YES, NO, SB , 2, 1.19, 0.
36, 0, 0, 0, 0, 0, 0, 0, 0
   30, DBUSER    , L0_X29            , CC, 0, 0, 0, 0, 0, 0, YES, NO, SB , 2, 1, 0.36,
 0, 0, 0, 0, 0, 0, 0, 0
   31, DBUSER    , L0_X30            , CC, 0, 0, 0, 0, 0, 0, YES, NO, SB , 2, 0.29, 0.
36, 0, 0, 0, 0, 0, 0, 0, 0
   32, DBUSER    , L0_X31            , CC, 0, 0, 0, 0, 0, 0, YES, NO, SB , 2, 0.19, 0.
36, 0, 0, 0, 0, 0, 0, 0, 0
   33, DBUSER    , L0_X32            , CC, 0, 0, 0, 0, 0, 0, YES, NO, SB , 2, 0.29, 0.
36, 0, 0, 0, 0, 0, 0, 0, 0
   34, DBUSER    , L0_X33            , CC, 0, 0, 0, 0, 0, 0, YES, NO, SB , 2, 1.29, 0.
36, 0, 0, 0, 0, 0, 0, 0, 0
   35, DBUSER    , L0_X33bis         , CC, 0, 0, 0, 0, 0, 0, YES, NO, SB , 2, 0.95, 0.
36, 0, 0, 0, 0, 0, 0, 0, 0
   36, DBUSER    , L0_X34            , CC, 0, 0, 0, 0, 0, 0, YES, NO, SB , 2, 1.55, 0.
36, 0, 0, 0, 0, 0, 0, 0, 0
   37, DBUSER    , L0_X35            , CC, 0, 0, 0, 0, 0, 0, YES, NO, SB , 2, 6.35, 0.
36, 0, 0, 0, 0, 0, 0, 0, 0
   38, DBUSER    , L0_X22bis         , CC, 0, 0, 0, 0, 0, 0, YES, NO, SB , 2, 1.28, 0.
25, 0, 0, 0, 0, 0, 0, 0, 0
  100, DBUSER    , L0_Y01            , CC, 0, 0, 0, 0, 0, 0, YES, NO, SB , 2, 7.4, 0.3
6, 0, 0, 0, 0, 0, 0, 0, 0
  101, DBUSER    , L0_Y02            , CC, 0, 0, 0, 0, 0, 0, YES, NO, SB , 2, 1.62, 0.
25, 0, 0, 0, 0, 0, 0, 0, 0
  102, DBUSER    , L0_Y02bis         , CC, 0, 0, 0, 0, 0, 0, YES, NO, SB , 2, 2.18, 0.
25, 0, 0, 0, 0, 0, 0, 0, 0
  103, DBUSER    , L0_Y02tris        , CC, 0, 0, 0, 0, 0, 0, YES, NO, SB , 2, 3.55, 0.
25, 0, 0, 0, 0, 0, 0, 0, 0
  104, DBUSER    , L0_Y03            , CC, 0, 0, 0, 0, 0, 0, YES, NO, SB , 2, 1.54, 0.
36, 0, 0, 0, 0, 0, 0, 0, 0
  105, DBUSER    , L0_Y04            , CC, 0, 0, 0, 0, 0, 0, YES, NO, SB , 2, 1.2, 0.3
6, 0, 0, 0, 0, 0, 0, 0, 0
  106, DBUSER    , L0_Y04bis         , CC, 0, 0, 0, 0, 0, 0, YES, NO, SB , 2, 0.59, 0.
```

```
36, 0, 0, 0, 0, 0, 0, 0, 0
  107, DBUSER    , L0_Y05            , CC, 0, 0, 0, 0, 0, 0, YES, NO, SB , 2, 1.25, 0.
25, 0, 0, 0, 0, 0, 0, 0, 0
  108, DBUSER    , L0_Y06            , CC, 0, 0, 0, 0, 0, 0, YES, NO, SB , 2, 1.15, 0.
36, 0, 0, 0, 0, 0, 0, 0, 0
  109, DBUSER    , L0_Y07            , CC, 0, 0, 0, 0, 0, 0, YES, NO, SB , 2, 1.18, 0.
25, 0, 0, 0, 0, 0, 0, 0, 0
  110, DBUSER    , L0_Y08            , CC, 0, 0, 0, 0, 0, 0, YES, NO, SB , 2, 2.75, 0.
36, 0, 0, 0, 0, 0, 0, 0, 0
  111, DBUSER    , L0_Y09            , CC, 0, 0, 0, 0, 0, 0, YES, NO, SB , 2, 6.43, 0.
25, 0, 0, 0, 0, 0, 0, 0, 0
  112, DBUSER    , L0_Y10            , CC, 0, 0, 0, 0, 0, 0, YES, NO, SB , 2, 6.43, 0.
25, 0, 0, 0, 0, 0, 0, 0, 0
  113, DBUSER    , L0_Y11            , CC, 0, 0, 0, 0, 0, 0, YES, NO, SB , 2, 6.43, 0.
36, 0, 0, 0, 0, 0, 0, 0, 0
  114, DBUSER    , L0_Y12            , CC, 0, 0, 0, 0, 0, 0, YES, NO, SB , 2, 0.84, 0.
36, 0, 0, 0, 0, 0, 0, 0, 0
  115, DBUSER    , L0_Y13            , CC, 0, 0, 0, 0, 0, 0, YES, NO, SB , 2, 0.83, 0.
25, 0, 0, 0, 0, 0, 0, 0, 0
  116, DBUSER    , L0_Y14            , CC, 0, 0, 0, 0, 0, 0, YES, NO, SB , 2, 2.55, 0.
36, 0, 0, 0, 0, 0, 0, 0, 0
  117, DBUSER    , L0_Y14bis         , CC, 0, 0, 0, 0, 0, 0, YES, NO, SB , 2, 4.11, 0.
25, 0, 0, 0, 0, 0, 0, 0, 0
  118, DBUSER    , L0_Y15            , CC, 0, 0, 0, 0, 0, 0, YES, NO, SB , 2, 1.37, 0.
36, 0, 0, 0, 0, 0, 0, 0, 0
  119, DBUSER    , L0_Y16            , CC, 0, 0, 0, 0, 0, 0, YES, NO, SB , 2, 5.61, 0.
36, 0, 0, 0, 0, 0, 0, 0, 0
  120, DBUSER    , L0_Y17            , CC, 0, 0, 0, 0, 0, 0, YES, NO, SB , 2, 4.69, 0.
25, 0, 0, 0, 0, 0, 0, 0, 0
  121, DBUSER    , L0_Y17bis         , CC, 0, 0, 0, 0, 0, 0, YES, NO, SB , 2, 1.35, 0.
25, 0, 0, 0, 0, 0, 0, 0, 0
  122, DBUSER    , L0_Y18            , CC, 0, 0, 0, 0, 0, 0, YES, NO, SB , 2, 1.79, 0.
36, 0, 0, 0, 0, 0, 0, 0, 0
  700, DBUSER    , Pilastro fitt     , CC, 0, 0, 0, 0, 0, 0, YES, NO, SB , 2, 0.248, 0
.248, 0, 0, 0, 0, 0, 0, 0, 0
  701, DBUSER    , cordolo 40x21     , CC, 0, 0, 0, 0, 0, 0, YES, NO, SB , 2, 0.21, 0.
4, 0, 0, 0, 0, 0, 0, 0, 0
  702, DBUSER    , cordolo 30x21     , CC, 0, 0, 0, 0, 0, 0, YES, NO, SB , 2, 0.21, 0.
3, 0, 0, 0, 0, 0, 0, 0, 0
  703, DBUSER    , cordolo RIGID     , CC, 0, 0, 0, 0, 0, 0, YES, NO, SB , 2, 0.2, 0.4
, 0, 0, 0, 0, 0, 0, 0, 0
  704, DBUSER    , cordolo fitt      , CC, 0, 0, 0, 0, 0, 0, YES, NO, SB , 2, 0.21, 0.
3, 0, 0, 0, 0, 0, 0, 0, 0
  707, DBUSER    , Pilastro 50x25    , CC, 0, 0, 0, 0, 0, 0, YES, NO, SB , 2, 0.5, 0.2
5, 0, 0, 0, 0, 0, 0, 0, 0
  708, DBUSER    , Trave             , CC, 0, 0, 0, 0, 0, 0, YES, NO, SB , 2, 0.25, 0.
55, 0, 0, 0, 0, 0, 0, 0, 0
  709, DBUSER    , Fascia 0.60x0.36  , CC, 0, 0, 0, 0, 0, 0, YES, NO, SB , 2, 0.6, 0.3
6, 0, 0, 0, 0, 0, 0, 0, 0
  710, DBUSER    , Fascia 1.45x0.25  , CC, 0, 0, 0, 0, 0, 0, YES, NO, SB , 2, 1.45, 0.
25, 0, 0, 0, 0, 0, 0, 0, 0
  711, DBUSER    , Fascia 0.95x0.25  , CC, 0, 0, 0, 0, 0, 0, YES, NO, SB , 2, 0.95, 0.
25, 0, 0, 0, 0, 0, 0, 0, 0
  712, DBUSER    , Fascia 0.45x0.36  , CC, 0, 0, 0, 0, 0, 0, YES, NO, SB , 2, 0.45, 0.
36, 0, 0, 0, 0, 0, 0, 0, 0
 1000, DBUSER    , LINE              , CC, 0, 0, 0, 0, 0, 0, YES, NO, SB , 2, 0.01, 0.
01, 0, 0, 0, 0, 0, 0, 0, 0

*STLDCASE    ; Static Load Cases
; LCNAME, LCTYPE, DESC
   PP   , D ,
   G1+G2 copertura A, D ,
```

```
   G1+G2 copertura B, D ,
   Q sottotetto, L ,
   sporto gronda, D ,
   Q neve, L ,
   SISMA X, E ,
   SISMA Y, E ,
   travi, D ,
   parapetto, D ,
   muro , D ,


*STORY    ; Story
;  NAME=NAME, LEVEL, bFLDIAP, WINDWX, WINDWY, WINDCX, WINDCY, ECCX, ECCY, IECCX, IECCY
, TAFX, TAFY, WTAFX, WTAFY, AreaPosNum ; line 1
;       AreaPosX1, AreaPosY1, AreaPosZ1, ...
                                        ; from line 2
   NAME=1F, -1, NO , 16.95, 13.1121, 8.475, 6.55603, 0.8475, 0.655603, 0, 0, 1, 1, 2.5
425, 1.96681, 0
   NAME=Roof, 3.35, YES, 16.95, 13.1121, 8.475, 6.55603, 0.8475, 0.655603, 0, 0, 1, 1,
 2.5425, 1.96681, 0

*STORY-CHANGED-INFO    ; Story Changed Information
; iCHANGEDINFO
 0

*STORY-ECCEN    ; Story Eccentricity
; bIncludeEccSeis, bIncludeEccWind, EccSeis, EccWind
 YES, YES, 5, 15

*DGN-CONC    ; Concrete Design Code
; CODE=CODE, RHOC, RHOR, RHOW, MRF, SHR-RATIO { , METHOD, A1, A2, A2_COLM, bSCWB }
 ; line 1
; [ACI318-89]     : bSPECIAL, PHI-B, PHI-T, PHIC1, PHI-C2, PHI-V
 ; line 2
; [ACI318-95]     : bSPECIAL, PHI-B, PHI-T, PHIC1, PHI-C2, PHI-V
 ; line 2
; [ACI318-99]     : bSPECIAL, PHI-B, PHI-T, PHIC1, PHI-C2, PHI-V
 ; line 2
; [ACI318-02]     : bSPECIAL, PHI-B, PHI-T, PHIC1, PHI-C2, PHI-V, TLF, SLF, TSLCB
 ; line 2
; [ACI318-05]     : bSPECIAL, PHI-B, PHI-T, PHIC1, PHI-C2, PHI-V, TLF, SLF, TSLCB
 ; line 2
; [ACI318-08]     : bSPECIAL, PHI-B, PHI-T, PHIC1, PHI-C2, PHI-V, TLF, SLF, TSLCB, SPW
ALL, BNDR-MTHD, CD, IE, FRMTYPE, 2NDGRUP, RHOS, bTOR, TRFT; line 2
; [ACI318-11]     : bCHEKCBEAM, bSPECIAL, PHI-B, PHI-T, PHIC1, PHI-C2, PHI-V, TLF, SLF
, TSLCB, SPWALL, BNDR-MTHD, CD, IE, FRMTYPE, 2NDGRUP, RHOS, bTOR, TRFT; line 2
; [ACI318-14]     : bCHEKCBEAM, bSPECIAL, PHI-B, PHI-T, PHIC1, PHI-C2, PHI-V, TLF, SLF
, TSLCB, SPWALL, BNDR-MTHD, CD, IE, FRMTYPE, 2NDGRUP, RHOS, bTOR, TRFT, bBC-JOINT; lin
e 2
; [ACI318M-14]    : bCHEKCBEAM, bSPECIAL, PHI-B, PHI-T, PHIC1, PHI-C2, PHI-V, TLF, SLF
, TSLCB, SPWALL, BNDR-MTHD, CD, IE, FRMTYPE, 2NDGRUP, RHOS, bTOR, TRFT, bBC-JOINT; lin
e 2
; [NSR-10]        : bCHEKCBEAM, bSPECIAL, PHI-B, PHI-T, PHIC1, PHI-C2, PHI-V, TLF, SLF
, TSLCB, SPWALL, BNDR-MTHD, CD, IE, FRMTYPE, 2NDGRUP, RHOS, bBC-JOINT; line 2
; [AIK-USD94]     : bSPECIAL, PHI-B, PHI-T, PHIC1, PHI-C2, PHI-V
 ; line 2
; [TWN-USD92]     : bSPECIAL, PHI-B, PHI-T, PHIC1, PHI-C2, PHI-V, bTOR, TRFT, SCWB
 ; line 2
; [TWN-USD100]    : bSPECIAL, PHI-B, PHI-T, PHIC1, PHI-C2, PHI-V, bTOR, TRFT, SCWB
 ; line 2
; [KCI-USD99]     : bSPECIAL, PHI-B, PHI-T, PHIC1, PHI-C2, PHI-V, TLF, SLF, TSLCB
 ; line 2
```

```
; [KCI-USD03]      : bSPECIAL, PHI-B, PHI-T, PHIC1, PHI-C2, PHI-V, TLF, SLF, TSLCB
 ; line 2
; [KCI-USD07]      : bSPECIAL, PHI-B, PHI-T, PHIC1, PHI-C2, PHI-V, TLF, SLF, TSLCB, SPW
ALL, BNDR-MTHD, CD, IE, FRMTYPE, 2NDGRUP, bTOR, TRFT; line 2
; [KCI-USD12]      : bSPECIAL, PHI-B, PHI-T, PHIC1, PHI-C2, PHI-V, TLF, SLF, TSLCB, SPW
ALL, BNDR-MTHD, CD, IE, EXPOSURE, FRMTYPE, 2NDGRUP, bTOR, TRFT; line 2
; [BS8110-97]      : GAMMA-MC, GAMMA-MS, GAMMA-MV
 ; line 2
; [EUROCODE2]      : GAMMA-CF, GAMMA-CA, GAMMA-SF, GAMMA-SA, iSCODE
 ; line 2
; [EUROCODE2:04]   : GAMMA-CF, GAMMA-CA, GAMMA-SF, GAMMA-SA, ALPHACC, iSCODE,
 ; line 2
;                    bRULE, WEAK-FACT, iDUC, GAMMA-RD-B, GAMMA-RD-C, S-GRUP
 ; line 2
;                    FRAMETYPE, AUA1, SPLCK, SOILFACTOR, TB, TC, TD, AGR, I, DAMPINGRAT
, BCJOINT, NTC2008, UF, GAMMA-RD-W, GAMMA-RD-J ; line 2
;                    STRUT-ANG, bBEHAVIOR-FACT, BEHAVIOR-FACT-VALUE, iNTC, bVCWALL, bVC
COLM, dPHIEF, bAUTOA, bAUTOC, A, B, C, bTOR    ; line 2
;                    bSHELL, dSHELLHORIZ, DSHELLVERT    ; line 2
; [EUROCODE2-2:05]: GAMMA-CF, GAMMA-CA, GAMMA-SF, GAMMA-SA, GAMMA_CL, GAMMA_SL, ALPHAC
C, iSCODE, STRUT-ANG,; line 2
;                    bSHELL, dSHELLHORIZ, DSHELLVERT    ; line 2
; [IS456:2000]     : bSPECIAL, GAMMA-C, GAMMA-S, FOS, SubRex
 ; line 2
; [GB50010-02]     : bSPECIAL, GAMMA-C, GAMMA-S, KIND, iSlabType
 ; line 2
; [GB50010-10]     : bSPECIAL, GAMMA-C, GAMMA-S, KIND, iSlabType, bTOR, TRFT
 ; line 2
; [CSA-A23.3-94]   : bSPECIAL, PHI-C, PHI-S, PHI-M
 ; line 2
; [AIK-WSD2K]      : bSPECIAL
 ; line 2
; [AIJ-WSD99]      : bSPECIAL, KIND
 ; line 2
; [AASHTO-LRFD12] : bSPECIAL, PHI-B, PHI-T, PHI-C1, PHI-C2, PHI-V, KIND
 ; line 2
; [AASHTO-LRFD02] : bSPECIAL, PHI-B, PHI-T, PHI-C1, PHI-C2, PHI-V, KIND
 ; line 2
; [AASHTO-LFD96]  : bSPECIAL, PHI-B, PHI-T, PHI-C1, PHI-C2, PHI-V
 ; line 2
; [KSCE-USD05]     : bSPECIAL, PHI-B, PHI-T, PHI-C1, PHI-C2, PHI-V
 ; line 2
; [KSCE-USD96]     : bSPECIAL, PHI-B, PHI-T, PHI-C1, PHI-C2, PHI-V
 ; line 2
; [KSCE-RAIL-USE04] : bSPECIAL, PHI-B, PHI-T, PHI-C1, PHI-C2, PHI-V
 ; line 2
; [TWN-BRG-LSD90] : bSPECIAL, PHI-B, PHI-T, PHI-C1, PHI-C2, PHI-V
 ; line 2
; [JTJ023-85]      : GAMMA-C, GAMMA-S, KIND
 ; line 2
; [CSA-S6-00]      : bSPECIAL, PHI-C, PHI-S, KIND
 ; line 2
; [CSA-S6-14]      : bSPECIAL, PHI-C, PHI-S, KIND
 ; line 2
; [IRC:21-2000]    : GAMMA-C, GAMMA-S
 ; line 2
; [SNiP 2.05.03-84*]  : nBRIDGE, bmb7mb8, mb7mb8Type, mb7, mb8, bmb9, mb9Type, mb9
 ; line 2
; [SP 35.13330.2011]  : nBRIDGE, bmb7mb8, mb7mb8Type, mb7, mb8, bmb9, mb9Type, mb9
 ; line 2
; Member Check     : bBEAM, bCOLM, bBRCE, bWALL, bSLAB, bMAT, bRBEAM, bRCOLM, bRBRCE, b
RWALL, bRSLAB, bRMAT, bSBEAM, bCANTIL, bUNDER-BM/COLM
```

```
   CODE=Eurocode2:04, 0, 0, 0, 1, 0, , , , ,
   1.5, 1.2, 1.15, 1, 0.85, 0, NO, 1.3, 0, 1.2, 1.3, , 0, 1.1, 0, 1.2, 0.15, 0.5, 2, 0
.08, 1, 5, NO, 0, YES, 0.6, 1.2, 1.2, 45, NO, 1.5, 2, NO, NO, 2.14, NO, YES, 0.7, 1.1,
 1, NO, NO, 0, 0
   YES, YES, YES, YES, YES, YES, YES, YES, YES, YES, YES, YES, YES, YES, YES, 0

*CONSTRAINT    ; Supports
; NODE_LIST, CONST(Dx,Dy,Dz,Rx,Ry,Rz), GROUP
   38 39 43 49 55 59 62 86 90 92to101 166to168 173 182 231 248 450 , 111111,
   451 453 456 554, 111111,

*REBAR-COLUMN    ; Modify Column Rebar Data
; iSEC, iSUBSEC, HOOP, RBNAME, bUseCornerRB, CornerRBNAME, iNQRB, iNROW, DO, SRBNAME,
SPACE, iSRBN1, iSRBN2, iBHJRN, SRBNAME_C, SPACE_C, iSRBN1_C, iSRBN2_C, bSameRebar
  707,    0, TIED, P14, NO, P14, 6, 3, 0.03, P8, 0.25, 2, 2, 0, P8, 0.25, 2, 2, YES

*FRAME-RLS    ; Beam End Release
; ELEM_LIST, bVALUE, FLAG-i, Fxi, Fyi, Fzi, Mxi, Myi, Mzi        ; 1st line
;                    FLAG-j, Fxj, Fyj, Fzj, Mxj, Myj, Mzj, GROUP ; 2nd line
     3,  NO, 000001, 0, 0, 0, 0, 0, 0
             000000, 0, 0, 0, 0, 0, 0,
     6,  NO, 000001, 0, 0, 0, 0, 0, 0
             000000, 0, 0, 0, 0, 0, 0,
     7,  NO, 000001, 0, 0, 0, 0, 0, 0
             000000, 0, 0, 0, 0, 0, 0,
    13,  NO, 000001, 0, 0, 0, 0, 0, 0
             000000, 0, 0, 0, 0, 0, 0,
    14,  NO, 000001, 0, 0, 0, 0, 0, 0
             000000, 0, 0, 0, 0, 0, 0,
    20,  NO, 000001, 0, 0, 0, 0, 0, 0
             000000, 0, 0, 0, 0, 0, 0,
    21,  NO, 000001, 0, 0, 0, 0, 0, 0
             000000, 0, 0, 0, 0, 0, 0,
    22,  NO, 000001, 0, 0, 0, 0, 0, 0
             000000, 0, 0, 0, 0, 0, 0,
    23,  NO, 000001, 0, 0, 0, 0, 0, 0
             000000, 0, 0, 0, 0, 0, 0,
    25,  NO, 000001, 0, 0, 0, 0, 0, 0
             000000, 0, 0, 0, 0, 0, 0,
    28,  NO, 000001, 0, 0, 0, 0, 0, 0
             000000, 0, 0, 0, 0, 0, 0,
    29,  NO, 000001, 0, 0, 0, 0, 0, 0
             000000, 0, 0, 0, 0, 0, 0,
    31,  NO, 000001, 0, 0, 0, 0, 0, 0
             000000, 0, 0, 0, 0, 0, 0,
    32,  NO, 000001, 0, 0, 0, 0, 0, 0
             000000, 0, 0, 0, 0, 0, 0,
    35,  NO, 000001, 0, 0, 0, 0, 0, 0
             000000, 0, 0, 0, 0, 0, 0,
    36,  NO, 000001, 0, 0, 0, 0, 0, 0
             000000, 0, 0, 0, 0, 0, 0,
    37,  NO, 000001, 0, 0, 0, 0, 0, 0
             000000, 0, 0, 0, 0, 0, 0,
    38,  NO, 000001, 0, 0, 0, 0, 0, 0
             000000, 0, 0, 0, 0, 0, 0,
    41,  NO, 000011, 0, 0, 0, 0, 0, 0
             000011, 0, 0, 0, 0, 0, 0,
  2000,  NO, 000011, 0, 0, 0, 0, 0, 0
             000000, 0, 0, 0, 0, 0, 0,
  2004,  NO, 000011, 0, 0, 0, 0, 0, 0
             000011, 0, 0, 0, 0, 0, 0,
  2005,  NO, 000011, 0, 0, 0, 0, 0, 0
```

```
            000011, 0, 0, 0, 0, 0, 0,
2008,  NO, 000011, 0, 0, 0, 0, 0, 0
            000011, 0, 0, 0, 0, 0, 0,
2009,  NO, 000011, 0, 0, 0, 0, 0, 0
            000011, 0, 0, 0, 0, 0, 0,
2011,  NO, 000011, 0, 0, 0, 0, 0, 0
            000011, 0, 0, 0, 0, 0, 0,
2012,  NO, 000011, 0, 0, 0, 0, 0, 0
            000011, 0, 0, 0, 0, 0, 0,
6000,  NO, 000011, 0, 0, 0, 0, 0, 0
            000010, 0, 0, 0, 0, 0, 0,
6001,  NO, 000010, 0, 0, 0, 0, 0, 0
            000010, 0, 0, 0, 0, 0, 0,
6003,  NO, 000010, 0, 0, 0, 0, 0, 0
            000000, 0, 0, 0, 0, 0, 0,
6004,  NO, 000010, 0, 0, 0, 0, 0, 0
            000011, 0, 0, 0, 0, 0, 0,
6005,  NO, 000011, 0, 0, 0, 0, 0, 0
            000010, 0, 0, 0, 0, 0, 0,
6006,  NO, 000010, 0, 0, 0, 0, 0, 0
            000010, 0, 0, 0, 0, 0, 0,
6007,  NO, 000011, 0, 0, 0, 0, 0, 0
            000010, 0, 0, 0, 0, 0, 0,
6009,  NO, 000010, 0, 0, 0, 0, 0, 0
            000010, 0, 0, 0, 0, 0, 0,
6010,  NO, 000010, 0, 0, 0, 0, 0, 0
            000010, 0, 0, 0, 0, 0, 0,
6012,  NO, 000010, 0, 0, 0, 0, 0, 0
            000011, 0, 0, 0, 0, 0, 0,
6013,  NO, 000010, 0, 0, 0, 0, 0, 0
            000000, 0, 0, 0, 0, 0, 0,
6015,  NO, 000010, 0, 0, 0, 0, 0, 0
            000010, 0, 0, 0, 0, 0, 0,
6016,  NO, 000011, 0, 0, 0, 0, 0, 0
            000000, 0, 0, 0, 0, 0, 0,
6017,  NO, 000000, 0, 0, 0, 0, 0, 0
            000010, 0, 0, 0, 0, 0, 0,
6018,  NO, 000010, 0, 0, 0, 0, 0, 0
            000011, 0, 0, 0, 0, 0, 0,
6020,  NO, 000011, 0, 0, 0, 0, 0, 0
            000010, 0, 0, 0, 0, 0, 0,
6021,  NO, 000010, 0, 0, 0, 0, 0, 0
            000010, 0, 0, 0, 0, 0, 0,
6022,  NO, 000000, 0, 0, 0, 0, 0, 0
            000010, 0, 0, 0, 0, 0, 0,
6023,  NO, 000010, 0, 0, 0, 0, 0, 0
            000000, 0, 0, 0, 0, 0, 0,
6024,  NO, 000010, 0, 0, 0, 0, 0, 0
            000010, 0, 0, 0, 0, 0, 0,
6029,  NO, 000010, 0, 0, 0, 0, 0, 0
            000010, 0, 0, 0, 0, 0, 0,
6030,  NO, 000010, 0, 0, 0, 0, 0, 0
            000010, 0, 0, 0, 0, 0, 0,
6031,  NO, 000000, 0, 0, 0, 0, 0, 0
            000010, 0, 0, 0, 0, 0, 0,
6035,  NO, 000010, 0, 0, 0, 0, 0, 0
            000011, 0, 0, 0, 0, 0, 0,
6037,  NO, 000010, 0, 0, 0, 0, 0, 0
            000011, 0, 0, 0, 0, 0, 0,
6038,  NO, 000010, 0, 0, 0, 0, 0, 0
            000000, 0, 0, 0, 0, 0, 0,
6039,  NO, 000010, 0, 0, 0, 0, 0, 0
```

```
            000010, 0, 0, 0, 0, 0, 0,
  6040,  NO, 000010, 0, 0, 0, 0, 0, 0
            000010, 0, 0, 0, 0, 0, 0,
  6041,  NO, 000010, 0, 0, 0, 0, 0, 0
            000010, 0, 0, 0, 0, 0, 0,
  6042,  NO, 000010, 0, 0, 0, 0, 0, 0
            000010, 0, 0, 0, 0, 0, 0,
  6043,  NO, 000010, 0, 0, 0, 0, 0, 0
            000010, 0, 0, 0, 0, 0, 0,
  6044,  NO, 000010, 0, 0, 0, 0, 0, 0
            000010, 0, 0, 0, 0, 0, 0,
  6101,  NO, 000000, 0, 0, 0, 0, 0, 0
            000011, 0, 0, 0, 0, 0, 0,
  6103,  NO, 000011, 0, 0, 0, 0, 0, 0
            000000, 0, 0, 0, 0, 0, 0,
  6104,  NO, 000011, 0, 0, 0, 0, 0, 0
            000011, 0, 0, 0, 0, 0, 0,
  6105,  NO, 000000, 0, 0, 0, 0, 0, 0
            000010, 0, 0, 0, 0, 0, 0,
  6106,  NO, 000010, 0, 0, 0, 0, 0, 0
            000010, 0, 0, 0, 0, 0, 0,
  6107,  NO, 000001, 0, 0, 0, 0, 0, 0
            000000, 0, 0, 0, 0, 0, 0,
  6166,  NO, 000000, 0, 0, 0, 0, 0, 0
            000011, 0, 0, 0, 0, 0, 0,
  6167,  NO, 000011, 0, 0, 0, 0, 0, 0
            000000, 0, 0, 0, 0, 0, 0,
  6168,  NO, 000000, 0, 0, 0, 0, 0, 0
            000011, 0, 0, 0, 0, 0, 0,
  6218,  NO, 000001, 0, 0, 0, 0, 0, 0
            000000, 0, 0, 0, 0, 0, 0,

*LOADTOMASS    ; Load to Mass
; DIR, bNODAL, bBEAM, bFLOOR, bPRES, GRAV
; LCNAME1, FACTOR1, LCNAME2, FACTOR2, ...   ; from line 1
   XY, YES, YES, YES, YES, 9.806
   PP, 1, G1+G2 copertura A, 3.7, Q sottotetto, 0.3, sporto gronda, 2, travi, 3
   parapetto, 1.5, muro, 4.6, G1+G2 copertura B, 1.5

*USE-STLD, PP

*SELFWEIGHT    ; Self Weight
; X, Y, Z, GROUP
0, 0, -1,

; End of data for load case [PP] -------------------------

*USE-STLD, G1+G2 copertura A

*BEAMLOAD    ; Element Beam Loads
; ELEM_LIST, CMD, TYPE, DIR, bPROJ, [ECCEN], [VALUE], GROUP
; ELEM_LIST, CMD, TYPE, TYPE, DIR, VX, VY, VZ, bPROJ, [ECCEN], [VALUE], GROUP
; [VALUE]       : D1, P1, D2, P2, D3, P3, D4, P4
; [ECCEN]       : bECCEN, ECCDIR, I-END, J-END, bJ-END
; [ADDITIONAL]  : bADDITIONAL, ADDITIONAL_I-END, ADDITIONAL_J-END, bADDITIONAL_J-END
  6005, BEAM   , UNILOAD, GZ, NO , NO, aDir[1], , , , 0, -1.79, 1, -1.79, 0, 0, 0, 0,
, NO, 0, 0, NO,
  6005, BEAM   , UNILOAD, GZ, NO , NO, aDir[1], , , , 0, -3.15, 1, -3.15, 0, 0, 0, 0,
, NO, 0, 0, NO,
  6006, BEAM   , UNILOAD, GZ, NO , NO, aDir[1], , , , 0, -3.525, 1, -3.525, 0, 0, 0, 0
, , NO, 0, 0, NO,
  6006, BEAM   , UNILOAD, GZ, NO , NO, aDir[1], , , , 0, -3.15, 1, -3.15, 0, 0, 0, 0,
```

```
, NO, 0, 0, NO,
  6007, BEAM   , UNILOAD, GZ, NO , NO, aDir[1], , , , 0, -3.525, 0.368421, -3.525, 0,
0, 0, 0, , NO, 0, 0, NO,
  6007, BEAM   , UNILOAD, GZ, NO , NO, aDir[1], , , , 0.684211, -3.525, 1, -3.525, 0,
0, 0, 0, , NO, 0, 0, NO,
  6007, BEAM   , UNILOAD, GZ, NO , NO, aDir[1], , , , 0.368421, -3.525, 0.684211, -3.5
25, 0, 0, 0, 0, , NO, 0, 0, NO,
  6009, BEAM   , UNILOAD, GZ, NO , NO, aDir[1], , , , 0, -3.15, 1, -3.15, 0, 0, 0, 0,
, NO, 0, 0, NO,
  6009, BEAM   , UNILOAD, GZ, NO , NO, aDir[1], , , , 0, -3.525, 1, -3.525, 0, 0, 0, 0
, , NO, 0, 0, NO,
  6010, BEAM   , UNILOAD, GZ, NO , NO, aDir[1], , , , 0, -1.79, 1, -1.79, 0, 0, 0, 0,
, NO, 0, 0, NO,
  6010, BEAM   , UNILOAD, GZ, NO , NO, aDir[1], , , , 0, -3.15, 1, -3.15, 0, 0, 0, 0,
, NO, 0, 0, NO,
  6012, BEAM   , UNILOAD, GZ, NO , NO, aDir[1], , , , 0.326141, -3.525, 0.652282, -3.5
25, 0, 0, 0, 0, , NO, 0, 0, NO,
  6012, BEAM   , UNILOAD, GZ, NO , NO, aDir[1], , , , 0.652282, -3.525, 1, -3.525, 0,
0, 0, 0, , NO, 0, 0, NO,
  6012, BEAM   , UNILOAD, GZ, NO , NO, aDir[1], , , , 0, -3.525, 0.326141, -3.525, 0,
0, 0, 0, , NO, 0, 0, NO,
  6013, BEAM   , UNILOAD, GZ, NO , NO, aDir[1], , , , 0, -3.15, 1, -3.15, 0, 0, 0, 0,
, NO, 0, 0, NO,
  6013, BEAM   , UNILOAD, GZ, NO , NO, aDir[1], , , , 0, -3.525, 1, -3.525, 0, 0, 0, 0
, , NO, 0, 0, NO,
  6015, BEAM   , UNILOAD, GZ, NO , NO, aDir[1], , , , 0, -3.15, 1, -3.15, 0, 0, 0, 0,
, NO, 0, 0, NO,
  6015, BEAM   , UNILOAD, GZ, NO , NO, aDir[1], , , , 0, -1.79, 1, -1.79, 0, 0, 0, 0,
, NO, 0, 0, NO,
  6022, BEAM   , UNILOAD, GZ, NO , NO, aDir[1], , , , 0, -3.15, 1, -3.15, 0, 0, 0, 0,
, NO, 0, 0, NO,
  6022, BEAM   , UNILOAD, GZ, NO , NO, aDir[1], , , , 0, -1.675, 1, -1.675, 0, 0, 0, 0
, , NO, 0, 0, NO,
  6023, BEAM   , UNILOAD, GZ, NO , NO, aDir[1], , , , 0, -3.15, 1, -3.15, 0, 0, 0, 0,
, NO, 0, 0, NO,
  6023, BEAM   , UNILOAD, GZ, NO , NO, aDir[1], , , , 0, -1.79, 1, -1.79, 0, 0, 0, 0,
, NO, 0, 0, NO,
  6029, BEAM   , UNILOAD, GZ, NO , NO, aDir[1], , , , 0, -1.675, 1, -1.675, 0, 0, 0, 0
, , NO, 0, 0, NO,
  6030, BEAM   , UNILOAD, GZ, NO , NO, aDir[1], , , , 0, -1.675, 1, -1.675, 0, 0, 0, 0
, , NO, 0, 0, NO,
  6030, BEAM   , UNILOAD, GZ, NO , NO, aDir[1], , , , 0, -3.15, 1, -3.15, 0, 0, 0, 0,
, NO, 0, 0, NO,
  6031, BEAM   , UNILOAD, GZ, NO , NO, aDir[1], , , , 0, -3.1, 1, -3.1, 0, 0, 0, 0, ,
NO, 0, 0, NO,
  6031, BEAM   , UNILOAD, GZ, NO , NO, aDir[1], , , , 0, -1.8, 1, -1.8, 0, 0, 0, 0, ,
NO, 0, 0, NO,
  6032, BEAM   , UNILOAD, GZ, NO , NO, aDir[1], , , , 0, -1.8, 1, -1.8, 0, 0, 0, 0, ,
NO, 0, 0, NO,
  6035, BEAM   , UNILOAD, GZ, NO , NO, aDir[1], , , , 0, -3.1, 1, -3.1, 0, 0, 0, 0, ,
NO, 0, 0, NO,
  6035, BEAM   , UNILOAD, GZ, NO , NO, aDir[1], , , , 0, -1.8, 1, -1.8, 0, 0, 0, 0, ,
NO, 0, 0, NO,
  6036, BEAM   , UNILOAD, GZ, NO , NO, aDir[1], , , , 0, -1.8, 1, -1.8, 0, 0, 0, 0, ,
NO, 0, 0, NO,
  6037, BEAM   , UNILOAD, GZ, NO , NO, aDir[1], , , , 0, -1.675, 1, -1.675, 0, 0, 0, 0
, , NO, 0, 0, NO,
  6037, BEAM   , UNILOAD, GZ, NO , NO, aDir[1], , , , 0, -3.15, 1, -3.15, 0, 0, 0, 0,
, NO, 0, 0, NO,
  6038, BEAM   , UNILOAD, GZ, NO , NO, aDir[1], , , , 0, -1.675, 1, -1.675, 0, 0, 0, 0
, , NO, 0, 0, NO,
  6100, BEAM   , UNILOAD, GZ, NO , NO, aDir[1], , , , 0, -1.79, 1, -1.79, 0, 0, 0, 0,
```

```
, NO, 0, 0, NO,
  6101, BEAM   , UNILOAD, GZ, NO , NO, aDir[1], , , , 0, -1.79, 1, -1.79, 0, 0, 0, 0,
, NO, 0, 0, NO,
  6102, BEAM   , UNILOAD, GZ, NO , NO, aDir[1], , , , 0, -1.79, 1, -1.79, 0, 0, 0, 0,
, NO, 0, 0, NO,

; End of data for load case [G1+G2 copertura A] -------------------------

*USE-STLD, G1+G2 copertura B

*BEAMLOAD    ; Element Beam Loads
; ELEM_LIST, CMD, TYPE, DIR, bPROJ, [ECCEN], [VALUE], GROUP
; ELEM_LIST, CMD, TYPE, TYPE, DIR, VX, VY, VZ, bPROJ, [ECCEN], [VALUE], GROUP
; [VALUE]       : D1, P1, D2, P2, D3, P3, D4, P4
; [ECCEN]       : bECCEN, ECCDIR, I-END, J-END, bJ-END
; [ADDITIONAL]  : bADDITIONAL, ADDITIONAL_I-END, ADDITIONAL_J-END, bADDITIONAL_J-END
  6039, BEAM   , UNILOAD, GZ, NO , NO, aDir[1], , , , 0, -5.125, 1, -5.125, 0, 0, 0, 0
, , NO, 0, 0, NO,
  6040, BEAM   , UNILOAD, GZ, NO , NO, aDir[1], , , , 0, -5.125, 1, -5.125, 0, 0, 0, 0
, , NO, 0, 0, NO,
  6041, BEAM   , UNILOAD, GZ, NO , NO, aDir[1], , , , 0, -5.125, 1, -5.125, 0, 0, 0, 0
, , NO, 0, 0, NO,
  6042, BEAM   , UNILOAD, GZ, NO , NO, aDir[1], , , , 0, -5.125, 1, -5.125, 0, 0, 0, 0
, , NO, 0, 0, NO,
  6043, BEAM   , UNILOAD, GZ, NO , NO, aDir[1], , , , 0, -5.125, 1, -5.125, 0, 0, 0, 0
, , NO, 0, 0, NO,
  6044, BEAM   , UNILOAD, GZ, NO , NO, aDir[1], , , , 0, -5.125, 1, -5.125, 0, 0, 0, 0
, , NO, 0, 0, NO,

; End of data for load case [G1+G2 copertura B] -------------------------

*USE-STLD, sporto gronda

*BEAMLOAD    ; Element Beam Loads
; ELEM_LIST, CMD, TYPE, DIR, bPROJ, [ECCEN], [VALUE], GROUP
; ELEM_LIST, CMD, TYPE, TYPE, DIR, VX, VY, VZ, bPROJ, [ECCEN], [VALUE], GROUP
; [VALUE]       : D1, P1, D2, P2, D3, P3, D4, P4
; [ECCEN]       : bECCEN, ECCDIR, I-END, J-END, bJ-END
; [ADDITIONAL]  : bADDITIONAL, ADDITIONAL_I-END, ADDITIONAL_J-END, bADDITIONAL_J-END
  6000, BEAM   , UNILOAD, GZ, NO , NO, aDir[1], , , , 0, -1, 1, -1, 0, 0, 0, 0, , NO,
0, 0, NO,
  6001, BEAM   , UNILOAD, GZ, NO , NO, aDir[1], , , , 0.88064, -1, 1, -1, 0, 0, 0, 0,
, NO, 0, 0, NO,
  6001, BEAM   , UNILOAD, GZ, NO , NO, aDir[1], , , , 0, -1, 0.88064, -1, 0, 0, 0, 0,
, NO, 0, 0, NO,
  6003, BEAM   , UNILOAD, GZ, NO , NO, aDir[1], , , , 0, -1, 1, -1, 0, 0, 0, 0, , NO,
0, 0, NO,
  6004, BEAM   , UNILOAD, GZ, NO , NO, aDir[1], , , , 0, -1, 1, -1, 0, 0, 0, 0, , NO,
0, 0, NO,
  6029, BEAM   , UNILOAD, GZ, NO , NO, aDir[1], , , , 0, -1, 1, -1, 0, 0, 0, 0, , NO,
0, 0, NO,
  6038, BEAM   , UNILOAD, GZ, NO , NO, aDir[1], , , , 0, -1, 1, -1, 0, 0, 0, 0, , NO,
0, 0, NO,
  6105, BEAM   , UNILOAD, GZ, NO , NO, aDir[1], , , , 0, -1, 1, -1, 0, 0, 0, 0, , NO,
0, 0, NO,
  6106, BEAM   , UNILOAD, GZ, NO , NO, aDir[1], , , , 0.34492, -1, 1, -1, 0, 0, 0, 0,
, NO, 0, 0, NO,
  6106, BEAM   , UNILOAD, GZ, NO , NO, aDir[1], , , , 0, -1, 0.34492, -1, 0, 0, 0, 0,
, NO, 0, 0, NO,

; End of data for load case [sporto gronda] -------------------------
```

```
*USE-STLD, Q neve

*BEAMLOAD    ; Element Beam Loads
; ELEM_LIST, CMD, TYPE, DIR, bPROJ, [ECCEN], [VALUE], GROUP
; ELEM_LIST, CMD, TYPE, TYPE, DIR, VX, VY, VZ, bPROJ, [ECCEN], [VALUE], GROUP
; [VALUE]       : D1, P1, D2, P2, D3, P3, D4, P4
; [ECCEN]       : bECCEN, ECCDIR, I-END, J-END, bJ-END
; [ADDITIONAL]  : bADDITIONAL, ADDITIONAL_I-END, ADDITIONAL_J-END, bADDITIONAL_J-END
  6005, BEAM   , UNILOAD, GZ, NO , NO, aDir[1], , , , 0, -1.79, 1, -1.79, 0, 0, 0, 0,
, NO, 0, 0, NO,
  6005, BEAM   , UNILOAD, GZ, NO , NO, aDir[1], , , , 0, -3.15, 1, -3.15, 0, 0, 0, 0,
, NO, 0, 0, NO,
  6006, BEAM   , UNILOAD, GZ, NO , NO, aDir[1], , , , 0, -3.15, 1, -3.15, 0, 0, 0, 0,
, NO, 0, 0, NO,
  6006, BEAM   , UNILOAD, GZ, NO , NO, aDir[1], , , , 0, -3.525, 1, -3.525, 0, 0, 0, 0
, , NO, 0, 0, NO,
  6007, BEAM   , UNILOAD, GZ, NO , NO, aDir[1], , , , 0, -3.525, 0.368421, -3.525, 0,
0, 0, 0, , NO, 0, 0, NO,
  6007, BEAM   , UNILOAD, GZ, NO , NO, aDir[1], , , , 0.368421, -3.525, 0.684211, -3.5
25, 0, 0, 0, 0, , NO, 0, 0, NO,
  6007, BEAM   , UNILOAD, GZ, NO , NO, aDir[1], , , , 0.684211, -3.525, 1, -3.525, 0,
0, 0, 0, , NO, 0, 0, NO,
  6009, BEAM   , UNILOAD, GZ, NO , NO, aDir[1], , , , 0, -3.15, 1, -3.15, 0, 0, 0, 0,
, NO, 0, 0, NO,
  6009, BEAM   , UNILOAD, GZ, NO , NO, aDir[1], , , , 0, -3.525, 1, -3.525, 0, 0, 0, 0
, , NO, 0, 0, NO,
  6010, BEAM   , UNILOAD, GZ, NO , NO, aDir[1], , , , 0, -1.79, 1, -1.79, 0, 0, 0, 0,
, NO, 0, 0, NO,
  6010, BEAM   , UNILOAD, GZ, NO , NO, aDir[1], , , , 0, -3.15, 1, -3.15, 0, 0, 0, 0,
, NO, 0, 0, NO,
  6012, BEAM   , UNILOAD, GZ, NO , NO, aDir[1], , , , 0.652282, -3.525, 1, -3.525, 0,
0, 0, 0, , NO, 0, 0, NO,
  6012, BEAM   , UNILOAD, GZ, NO , NO, aDir[1], , , , 0.326141, -3.525, 0.652282, -3.5
25, 0, 0, 0, 0, , NO, 0, 0, NO,
  6012, BEAM   , UNILOAD, GZ, NO , NO, aDir[1], , , , 0, -3.525, 0.326141, -3.525, 0,
0, 0, 0, , NO, 0, 0, NO,
  6013, BEAM   , UNILOAD, GZ, NO , NO, aDir[1], , , , 0, -3.525, 1, -3.525, 0, 0, 0, 0
, , NO, 0, 0, NO,
  6013, BEAM   , UNILOAD, GZ, NO , NO, aDir[1], , , , 0, -3.15, 1, -3.15, 0, 0, 0, 0,
, NO, 0, 0, NO,
  6015, BEAM   , UNILOAD, GZ, NO , NO, aDir[1], , , , 0, -1.79, 1, -1.79, 0, 0, 0, 0,
, NO, 0, 0, NO,
  6015, BEAM   , UNILOAD, GZ, NO , NO, aDir[1], , , , 0, -3.15, 1, -3.15, 0, 0, 0, 0,
, NO, 0, 0, NO,
  6022, BEAM   , UNILOAD, GZ, NO , NO, aDir[1], , , , 0, -1.675, 1, -1.675, 0, 0, 0, 0
, , NO, 0, 0, NO,
  6022, BEAM   , UNILOAD, GZ, NO , NO, aDir[1], , , , 0, -3.15, 1, -3.15, 0, 0, 0, 0,
, NO, 0, 0, NO,
  6023, BEAM   , UNILOAD, GZ, NO , NO, aDir[1], , , , 0, -3.15, 1, -3.15, 0, 0, 0, 0,
, NO, 0, 0, NO,
  6023, BEAM   , UNILOAD, GZ, NO , NO, aDir[1], , , , 0, -1.79, 1, -1.79, 0, 0, 0, 0,
, NO, 0, 0, NO,
  6029, BEAM   , UNILOAD, GZ, NO , NO, aDir[1], , , , 0, -1.675, 1, -1.675, 0, 0, 0, 0
, , NO, 0, 0, NO,
  6030, BEAM   , UNILOAD, GZ, NO , NO, aDir[1], , , , 0, -1.675, 1, -1.675, 0, 0, 0, 0
, , NO, 0, 0, NO,
  6030, BEAM   , UNILOAD, GZ, NO , NO, aDir[1], , , , 0, -3.15, 1, -3.15, 0, 0, 0, 0,
, NO, 0, 0, NO,
  6031, BEAM   , UNILOAD, GZ, NO , NO, aDir[1], , , , 0, -1.8, 1, -1.8, 0, 0, 0, 0, ,
NO, 0, 0, NO,
  6031, BEAM   , UNILOAD, GZ, NO , NO, aDir[1], , , , 0, -3.15, 1, -3.15, 0, 0, 0, 0,
, NO, 0, 0, NO,
```

```
  6032, BEAM   , UNILOAD, GZ, NO , NO, aDir[1], , , , 0, -1.8, 1, -1.8, 0, 0, 0, 0, ,
NO, 0, 0, NO,
  6035, BEAM   , UNILOAD, GZ, NO , NO, aDir[1], , , , 0, -1.8, 1, -1.8, 0, 0, 0, 0, ,
NO, 0, 0, NO,
  6035, BEAM   , UNILOAD, GZ, NO , NO, aDir[1], , , , 0, -3.15, 1, -3.15, 0, 0, 0, 0,
, NO, 0, 0, NO,
  6036, BEAM   , UNILOAD, GZ, NO , NO, aDir[1], , , , 0, -1.8, 1, -1.8, 0, 0, 0, 0, ,
NO, 0, 0, NO,
  6037, BEAM   , UNILOAD, GZ, NO , NO, aDir[1], , , , 0, -3.15, 1, -3.15, 0, 0, 0, 0,
, NO, 0, 0, NO,
  6037, BEAM   , UNILOAD, GZ, NO , NO, aDir[1], , , , 0, -1.675, 1, -1.675, 0, 0, 0, 0
, , NO, 0, 0, NO,
  6038, BEAM   , UNILOAD, GZ, NO , NO, aDir[1], , , , 0, -1.675, 1, -1.675, 0, 0, 0, 0
, , NO, 0, 0, NO,
  6039, BEAM   , UNILOAD, GZ, NO , NO, aDir[1], , , , 0, -5.125, 1, -5.125, 0, 0, 0, 0
, , NO, 0, 0, NO,
  6040, BEAM   , UNILOAD, GZ, NO , NO, aDir[1], , , , 0, -5.125, 1, -5.125, 0, 0, 0, 0
, , NO, 0, 0, NO,
  6041, BEAM   , UNILOAD, GZ, NO , NO, aDir[1], , , , 0, -5.125, 1, -5.125, 0, 0, 0, 0
, , NO, 0, 0, NO,
  6042, BEAM   , UNILOAD, GZ, NO , NO, aDir[1], , , , 0, -5.125, 1, -5.125, 0, 0, 0, 0
, , NO, 0, 0, NO,
  6043, BEAM   , UNILOAD, GZ, NO , NO, aDir[1], , , , 0, -5.125, 1, -5.125, 0, 0, 0, 0
, , NO, 0, 0, NO,
  6044, BEAM   , UNILOAD, GZ, NO , NO, aDir[1], , , , 0, -5.125, 1, -5.125, 0, 0, 0, 0
, , NO, 0, 0, NO,
  6100, BEAM   , UNILOAD, GZ, NO , NO, aDir[1], , , , 0, -1.79, 1, -1.79, 0, 0, 0, 0,
, NO, 0, 0, NO,
  6101, BEAM   , UNILOAD, GZ, NO , NO, aDir[1], , , , 0, -1.79, 1, -1.79, 0, 0, 0, 0,
, NO, 0, 0, NO,
  6102, BEAM   , UNILOAD, GZ, NO , NO, aDir[1], , , , 0, -1.79, 1, -1.79, 0, 0, 0, 0,
, NO, 0, 0, NO,

; End of data for load case [Q neve] -------------------------

*USE-STLD, SISMA X

*SEIS    ; Static Seismic Loads
; CODE=CODE, SFX, SFY, ECCX, ECCY, bACC, bINH, DESC, SFZR
   ; line 1
; [KS1992]   : SPT, EA, IF, PAX, PAY, PCX, PCY, RMFX, RMFY
   ; line 2
; [UBC1991]  : SPT, ZF, IF, PAX, PAY, PCX, PCY, NCX, NCY
   ; line 2
; [UBC1997]  : SPT, ZF, SST, CD, IF, PX, PY, NCX, NCY, PAX, PAY
   ; line 2
; [ATC306]   : SPC, EPV, PAX, PAY, PCX, PCY, RMFX, RMFY
   ; line 2
; [KS2000]   : SPT, EA, IF, PAX, PAY, PCX, PCY, RMFX, RMFY
   ; line 2
; [JIS]      : SPT, EA, SF, PAX, PAY, PCX, PCY, RMFX, RMFY, [JIS-AI]
   ; line 2
; [IBC2000]  : SDC, SC, MS, M1, IF, PX, PY, PCX, PCY, RMFX, RMFY
   ; line 2
; [EURO1996] : S, QO, KD, KR, KW, ALPHA, FPX, FPY
   ; line 2
; [CH2002]   : NSC, SFI, SC, ST, DR, EQ, bMM, FPX, FPY
   ; line 2
; [CHSH2003] : SFI, SC, ST, DR, EQ, bMM, FPX, FPY
   ; line 2
; [NBC1995]  : ZVR, AZ, VZ, IF, FF, PAX, PAY, PCX, PCY, FMFX, FMFY
   ; line 2
```

```
; [IS2002]   : SZ, ST, IF, DAMP, FPX, FPY, RFX, RFY
   ; line 2
; [TAIWAN99] : SZ, ST, IF, SMF, PM, PAX, PAY, PApX, PApY, PFX, PFY, RMFX, RMFY
   ; line 2
; [KBC2005]  : RA, SZ(Sds), SC(Sd1), SUG, bCPR, IF, iP, PAX, PAY, PApX, PApY, RMFX, RM
FY ; line 2
; [TAIWAN06] : SZ, Sds, Sd1, Sms, Sm1,Nda, Ndv,Nma, Nmv, ST, Fda, Fdv, Fma, Fmv, SubZ,

;  Sds_t, Sms_t, Td0_t, Tm0_t, IF, ALPHA, PM, PAX, PAY, PApX, PApY, PFX, PFY, RMFX, RM
FY ; line 2
; [EURO2004] : iGR, iSPE, S, TB, TC, TD, AG, Q, LBF, IF, FPX, FPY,
   ; line 2
; [JIS-AI]   : bUSER, STORY1, XDIR1, YDIR1, STORY2, XDIR2, YDIR2, ...
; [KBC2009]  : SZ, ZF, SC, CU, FA, Fv, SDS, SD1, SUG, IF, ip, PAX, PAY, PApX, PApY, RM
FX, RMFY
; [TAIWAN11] : SZ, Sds, Sd1, Sms, Sm1,Nda, Ndv,Nma, Nmv, ST, Fda, Fdv, Fma, Fmv, SubZ,

;  Sds_t, Sms_t, Td0_t, Tm0_t, IF, ALPHA, PM, PAX, PAY, PApX, PApY, PFX, PFY, RMFX, RM
FY ; line 2
; [NTC2008]  : iGR, iSPE, S, TB, TC, TD, AG, Q, AMPF, Tc*, FPX, FPY,
   ; line 2
; [CH2010]   : NSC, SFI, SC, ST, DR, EQ, bMM, FPX, FPY
   ; line 2
; [IBC2009]  : SC, Ss, S1, Fa, Fv, Sds, Sd1, Cu, TL, OC, IF, iP, PAX, PAY, PApX, PApY,
 RMFX, RMFY ; line 2
; [IBC2012]  : SC, Ss, S1, Fa, Fv, Sds, Sd1, Cu, TL, RC, IF, iP, PAX, PAY, PApX, PApY,
 RMFX, RMFY ; line 2
; [NTC2012]  : iGR, iSPE, S, TB, TC, TD, AG, Q, AMPF, Tc*, FPX, FPY,
   ; line 2
; [P100_2013]: iSPE, TB, TC, TD, AG, Q, IF, FPX, FPY
   ; line 2
; [IS1893_2016]: Zone, Soil, IF, Damp, Peri.X, Peri.Y, RsRdFact_X, RsRdFact_Y
   ; line 2
; [NTC2018]  : iGR, iSPE, S, TB, TC, TD, AG, Q, AMPF, Tc*, FPX, FPY,
   ; line 2
; SSTORY1, ESTORY1, ADDX1, ADDY1, ...
   ; from line 3
   CODE=NTC2018, 1, 0, POS, POS, NO, NO, , 0
        2, 4, 1.427, 0.147, 0.44, 2.336, 0.184, 1, 2.47, 0.273, 0, 0

; End of data for load case [SISMA X] -------------------------

*USE-STLD, SISMA Y

*SEIS    ; Static Seismic Loads
; CODE=CODE, SFX, SFY, ECCX, ECCY, bACC, bINH, DESC, SFZR
   ; line 1
; [KS1992]   : SPT, EA, IF, PAX, PAY, PCX, PCY, RMFX, RMFY
   ; line 2
; [UBC1991]  : SPT, ZF, IF, PAX, PAY, PCX, PCY, NCX, NCY
   ; line 2
; [UBC1997]  : SPT, ZF, SST, CD, IF, PX, PY, NCX, NCY, PAX, PAY
   ; line 2
; [ATC306]   : SPC, EPV, PAX, PAY, PCX, PCY, RMFX, RMFY
   ; line 2
; [KS2000]   : SPT, EA, IF, PAX, PAY, PCX, PCY, RMFX, RMFY
   ; line 2
; [JIS]      : SPT, EA, SF, PAX, PAY, PCX, PCY, RMFX, RMFY, [JIS-AI]
   ; line 2
; [IBC2000]  : SDC, SC, MS, M1, IF, PX, PY, PCX, PCY, RMFX, RMFY
   ; line 2
; [EURO1996] : S, QO, KD, KR, KW, ALPHA, FPX, FPY
```

```
   ; line 2
; [CH2002]   : NSC, SFI, SC, ST, DR, EQ, bMM, FPX, FPY
   ; line 2
; [CHSH2003] : SFI, SC, ST, DR, EQ, bMM, FPX, FPY
   ; line 2
; [NBC1995]  : ZVR, AZ, VZ, IF, FF, PAX, PAY, PCX, PCY, FMFX, FMFY
   ; line 2
; [IS2002]   : SZ, ST, IF, DAMP, FPX, FPY, RFX, RFY
   ; line 2
; [TAIWAN99] : SZ, ST, IF, SMF, PM, PAX, PAY, PApX, PApY, PFX, PFY, RMFX, RMFY
   ; line 2
; [KBC2005]  : RA, SZ(Sds), SC(Sd1), SUG, bCPR, IF, iP, PAX, PAY, PApX, PApY, RMFX, RM
FY ; line 2
; [TAIWAN06] : SZ, Sds, Sd1, Sms, Sm1,Nda, Ndv,Nma, Nmv, ST, Fda, Fdv, Fma, Fmv, SubZ,

;  Sds_t, Sms_t, Td0_t, Tm0_t, IF, ALPHA, PM, PAX, PAY, PApX, PApY, PFX, PFY, RMFX, RM
FY ; line 2
; [EURO2004] : iGR, iSPE, S, TB, TC, TD, AG, Q, LBF, IF, FPX, FPY,
   ; line 2
; [JIS-AI]   : bUSER, STORY1, XDIR1, YDIR1, STORY2, XDIR2, YDIR2, ...
; [KBC2009]  : SZ, ZF, SC, CU, FA, Fv, SDS, SD1, SUG, IF, ip, PAX, PAY, PApX, PApY, RM
FX, RMFY
; [TAIWAN11] : SZ, Sds, Sd1, Sms, Sm1,Nda, Ndv,Nma, Nmv, ST, Fda, Fdv, Fma, Fmv, SubZ,

;  Sds_t, Sms_t, Td0_t, Tm0_t, IF, ALPHA, PM, PAX, PAY, PApX, PApY, PFX, PFY, RMFX, RM
FY ; line 2
; [NTC2008]  : iGR, iSPE, S, TB, TC, TD, AG, Q, AMPF, Tc*, FPX, FPY,
   ; line 2
; [CH2010]   : NSC, SFI, SC, ST, DR, EQ, bMM, FPX, FPY
   ; line 2
; [IBC2009]  : SC, Ss, S1, Fa, Fv, Sds, Sd1, Cu, TL, OC, IF, iP, PAX, PAY, PApX, PApY,
 RMFX, RMFY ; line 2
; [IBC2012]  : SC, Ss, S1, Fa, Fv, Sds, Sd1, Cu, TL, RC, IF, iP, PAX, PAY, PApX, PApY,
 RMFX, RMFY ; line 2
; [NTC2012]  : iGR, iSPE, S, TB, TC, TD, AG, Q, AMPF, Tc*, FPX, FPY,
   ; line 2
; [P100_2013]: iSPE, TB, TC, TD, AG, Q, IF, FPX, FPY
   ; line 2
; [IS1893_2016]: Zone, Soil, IF, Damp, Peri.X, Peri.Y, RsRdFact_X, RsRdFact_Y
   ; line 2
; [NTC2018]  : iGR, iSPE, S, TB, TC, TD, AG, Q, AMPF, Tc*, FPX, FPY,
   ; line 2
; SSTORY1, ESTORY1, ADDX1, ADDY1, ...
   ; from line 3
   CODE=NTC2018, 0, 1, POS, POS, NO, NO, , 0
        2, 4, 1.427, 0.147, 0.44, 2.336, 0.184, 1, 2.47, 0.273, 0, 0

; End of data for load case [SISMA Y] -------------------------

*USE-STLD, travi

*BEAMLOAD    ; Element Beam Loads
; ELEM_LIST, CMD, TYPE, DIR, bPROJ, [ECCEN], [VALUE], GROUP
; ELEM_LIST, CMD, TYPE, TYPE, DIR, VX, VY, VZ, bPROJ, [ECCEN], [VALUE], GROUP
; [VALUE]       : D1, P1, D2, P2, D3, P3, D4, P4
; [ECCEN]       : bECCEN, ECCDIR, I-END, J-END, bJ-END
; [ADDITIONAL]  : bADDITIONAL, ADDITIONAL_I-END, ADDITIONAL_J-END, bADDITIONAL_J-END
  6039, BEAM   , UNILOAD, GZ, NO , NO, aDir[1], , , , 0, -1, 1, -1, 0, 0, 0, 0, , NO,
0, 0, NO,
  6040, BEAM   , UNILOAD, GZ, NO , NO, aDir[1], , , , 0, -1, 1, -1, 0, 0, 0, 0, , NO,
0, 0, NO,
  6041, BEAM   , UNILOAD, GZ, NO , NO, aDir[1], , , , 0, -1, 1, -1, 0, 0, 0, 0, , NO,
```

```
0, 0, NO,
  6042, BEAM   , UNILOAD, GZ, NO , NO, aDir[1], , , , 0, -1, 1, -1, 0, 0, 0, 0, , NO,
0, 0, NO,
  6043, BEAM   , UNILOAD, GZ, NO , NO, aDir[1], , , , 0, -1, 1, -1, 0, 0, 0, 0, , NO,
0, 0, NO,
  6044, BEAM   , UNILOAD, GZ, NO , NO, aDir[1], , , , 0, -1, 1, -1, 0, 0, 0, 0, , NO,
0, 0, NO,
  6045, BEAM   , UNILOAD, GZ, NO , NO, aDir[1], , , , 0, -1, 1, -1, 0, 0, 0, 0, , NO,
0, 0, NO,

; End of data for load case [travi] -------------------------

*USE-STLD, parapetto

*BEAMLOAD    ; Element Beam Loads
; ELEM_LIST, CMD, TYPE, DIR, bPROJ, [ECCEN], [VALUE], GROUP
; ELEM_LIST, CMD, TYPE, TYPE, DIR, VX, VY, VZ, bPROJ, [ECCEN], [VALUE], GROUP
; [VALUE]       : D1, P1, D2, P2, D3, P3, D4, P4
; [ECCEN]       : bECCEN, ECCDIR, I-END, J-END, bJ-END
; [ADDITIONAL]  : bADDITIONAL, ADDITIONAL_I-END, ADDITIONAL_J-END, bADDITIONAL_J-END
  6000, BEAM   , UNILOAD, GZ, NO , NO, aDir[1], , , , 0, -1, 1, -1, 0, 0, 0, 0, , NO,
0, 0, NO,
  6001, BEAM   , UNILOAD, GZ, NO , NO, aDir[1], , , , 0.88064, -1, 1, -1, 0, 0, 0, 0,
, NO, 0, 0, NO,
  6001, BEAM   , UNILOAD, GZ, NO , NO, aDir[1], , , , 0, -1, 0.88064, -1, 0, 0, 0, 0,
, NO, 0, 0, NO,
  6003, BEAM   , UNILOAD, GZ, NO , NO, aDir[1], , , , 0, -1, 1, -1, 0, 0, 0, 0, , NO,
0, 0, NO,
  6004, BEAM   , UNILOAD, GZ, NO , NO, aDir[1], , , , 0, -1, 1, -1, 0, 0, 0, 0, , NO,
0, 0, NO,
  6005, BEAM   , UNILOAD, GZ, NO , NO, aDir[1], , , , 0, -1, 1, -1, 0, 0, 0, 0, , NO,
0, 0, NO,
  6007, BEAM   , UNILOAD, GZ, NO , NO, aDir[1], , , , 0.368421, -1, 0.684211, -1, 0, 0
, 0, 0, , NO, 0, 0, NO,
  6007, BEAM   , UNILOAD, GZ, NO , NO, aDir[1], , , , 0.684211, -1, 1, -1, 0, 0, 0, 0,
 , NO, 0, 0, NO,
  6007, BEAM   , UNILOAD, GZ, NO , NO, aDir[1], , , , 0, -1, 0.368421, -1, 0, 0, 0, 0,
 , NO, 0, 0, NO,
  6010, BEAM   , UNILOAD, GZ, NO , NO, aDir[1], , , , 0, -1, 1, -1, 0, 0, 0, 0, , NO,
0, 0, NO,
  6012, BEAM   , UNILOAD, GZ, NO , NO, aDir[1], , , , 0.326141, -1, 0.652282, -1, 0, 0
, 0, 0, , NO, 0, 0, NO,
  6012, BEAM   , UNILOAD, GZ, NO , NO, aDir[1], , , , 0, -1, 0.326141, -1, 0, 0, 0, 0,
 , NO, 0, 0, NO,
  6012, BEAM   , UNILOAD, GZ, NO , NO, aDir[1], , , , 0.652282, -1, 1, -1, 0, 0, 0, 0,
 , NO, 0, 0, NO,
  6015, BEAM   , UNILOAD, GZ, NO , NO, aDir[1], , , , 0, -1, 1, -1, 0, 0, 0, 0, , NO,
0, 0, NO,
  6020, BEAM   , UNILOAD, GZ, NO , NO, aDir[1], , , , 0, -1, 1, -1, 0, 0, 0, 0, , NO,
0, 0, NO,
  6021, BEAM   , UNILOAD, GZ, NO , NO, aDir[1], , , , 0, -1, 1, -1, 0, 0, 0, 0, , NO,
0, 0, NO,
  6023, BEAM   , UNILOAD, GZ, NO , NO, aDir[1], , , , 0, -1, 1, -1, 0, 0, 0, 0, , NO,
0, 0, NO,
  6031, BEAM   , UNILOAD, GZ, NO , NO, aDir[1], , , , 0, -1, 1, -1, 0, 0, 0, 0, , NO,
0, 0, NO,
  6032, BEAM   , UNILOAD, GZ, NO , NO, aDir[1], , , , 0, -1, 1, -1, 0, 0, 0, 0, , NO,
0, 0, NO,
  6035, BEAM   , UNILOAD, GZ, NO , NO, aDir[1], , , , 0, -1, 1, -1, 0, 0, 0, 0, , NO,
0, 0, NO,
  6036, BEAM   , UNILOAD, GZ, NO , NO, aDir[1], , , , 0, -1, 1, -1, 0, 0, 0, 0, , NO,
0, 0, NO,
```

```
  6044, BEAM   , UNILOAD, GZ, NO , NO, aDir[1], , , , 0, -1, 1, -1, 0, 0, 0, 0, , NO,
0, 0, NO,
  6045, BEAM   , UNILOAD, GZ, NO , NO, aDir[1], , , , 0, -1, 1, -1, 0, 0, 0, 0, , NO,
0, 0, NO,
  6105, BEAM   , UNILOAD, GZ, NO , NO, aDir[1], , , , 0, -1, 1, -1, 0, 0, 0, 0, , NO,
0, 0, NO,
  6106, BEAM   , UNILOAD, GZ, NO , NO, aDir[1], , , , 0.34492, -1, 1, -1, 0, 0, 0, 0,
, NO, 0, 0, NO,
  6106, BEAM   , UNILOAD, GZ, NO , NO, aDir[1], , , , 0, -1, 0.34492, -1, 0, 0, 0, 0,
, NO, 0, 0, NO,

; End of data for load case [parapetto] -------------------------

*USE-STLD, muro

*BEAMLOAD    ; Element Beam Loads
; ELEM_LIST, CMD, TYPE, DIR, bPROJ, [ECCEN], [VALUE], GROUP
; ELEM_LIST, CMD, TYPE, TYPE, DIR, VX, VY, VZ, bPROJ, [ECCEN], [VALUE], GROUP
; [VALUE]       : D1, P1, D2, P2, D3, P3, D4, P4
; [ECCEN]       : bECCEN, ECCDIR, I-END, J-END, bJ-END
; [ADDITIONAL]  : bADDITIONAL, ADDITIONAL_I-END, ADDITIONAL_J-END, bADDITIONAL_J-END
  6039, BEAM   , UNILOAD, GZ, NO , NO, aDir[1], , , , 0, -1, 1, -1, 0, 0, 0, 0, , NO,
0, 0, NO,
  6040, BEAM   , UNILOAD, GZ, NO , NO, aDir[1], , , , 0, -1, 1, -1, 0, 0, 0, 0, , NO,
0, 0, NO,
  6041, BEAM   , UNILOAD, GZ, NO , NO, aDir[1], , , , 0, -1, 1, -1, 0, 0, 0, 0, , NO,
0, 0, NO,
  6042, BEAM   , UNILOAD, GZ, NO , NO, aDir[1], , , , 0, -1, 1, -1, 0, 0, 0, 0, , NO,
0, 0, NO,
  6043, BEAM   , UNILOAD, GZ, NO , NO, aDir[1], , , , 0, -1, 1, -1, 0, 0, 0, 0, , NO,
0, 0, NO,
  6044, BEAM   , UNILOAD, GZ, NO , NO, aDir[1], , , , 0, -1, 1, -1, 0, 0, 0, 0, , NO,
0, 0, NO,

; End of data for load case [muro] -------------------------

*SFUNCTION    ; Spectrum Function
; FUNC=NAME, iTYPE, iMETHOD, SCALE/MAX, GRAV, DRATIO, DESC, RMF      ; line 1
;   SPEC_CODE, [CODE_DATA]                                            ; line 2
;      PERIOD1, VALUE1, PERIOD2, VALUE2, ...                          ; from line 3
;[CODE_DATA] : NSC, SFI, SC, EQ, TG, DP, MaxEQ
        ; CH2001
;[CODE_DATA] : NSC, SFI, SC, EQ, TG, DP, MaxEQ, nLForce               ; CH2010
;[CODE_DATA] : SFI, SC, EQ, TG, DP, MaxEQ                             ; CHSH2003
;[CODE_DATA] : DIV, SC, SFI, EQ, TG, G                                ; GB50111_2006
;[CODE_DATA] : BT, ZM, ST, SI, SC, TG, CI, CS, CD, EPA, SMAX, PERIOD ; JTG/T B02-01-20
08
;[CODE_DATA] : iSPE, SParam, TB, TC, TD, AG, Q, IF, FPX, FPY         ; P100-1(2013)
   FUNC=Muscoline_T1_C_q=1__CU III, 1, 0, 1, 9.806, 0.05, , 1.000000
   USER
          0.000000,         0.263,   0.007000,         0.282
          0.015000,         0.301,   0.022000,          0.32
          0.029000,          0.34,   0.037000,         0.359
          0.044000,         0.378,   0.051000,         0.398
          0.059000,         0.417,   0.066000,         0.436
          0.073000,         0.456,   0.081000,         0.475
          0.088000,         0.494,   0.095000,         0.513
          0.103000,         0.533,   0.110000,         0.552
          0.117000,         0.571,   0.125000,         0.591
          0.132000,          0.61,   0.139000,         0.629
          0.147000,         0.648,   0.161000,         0.648
          0.176000,         0.648,   0.191000,         0.648
```

```
          0.206000,         0.648,   0.220000,         0.648
          0.235000,         0.648,   0.250000,         0.648
          0.264000,         0.648,   0.279000,         0.648
          0.294000,         0.648,   0.308000,         0.648
          0.323000,         0.648,   0.338000,         0.648
          0.352000,         0.648,   0.367000,         0.648
          0.382000,         0.648,   0.396000,         0.648
          0.411000,         0.648,   0.426000,         0.648
          0.440000,         0.648,   0.535000,         0.534
          0.630000,         0.453,   0.725000,         0.394
          0.820000,         0.349,   0.914000,         0.312
          1.009000,         0.283,   1.104000,         0.259
          1.199000,         0.238,   1.293000,         0.221
          1.388000,         0.206,   1.483000,         0.193
          1.578000,         0.181,   1.672000,         0.171
          1.767000,         0.162,   1.862000,         0.153
          1.957000,         0.146,   2.051000,         0.139
          2.146000,         0.133,   2.241000,         0.127
          2.336000,         0.122,   2.419000,         0.114
          2.502000,         0.107,   2.585000,           0.1
          2.669000,         0.094,   2.752000,         0.088
          2.835000,         0.083,   2.918000,         0.078
          3.001000,         0.074,   3.085000,          0.07
          3.168000,         0.066,   3.251000,         0.063
          3.334000,          0.06,   3.418000,         0.057
          3.501000,         0.054,   3.584000,         0.052
          3.667000,          0.05,   3.750000,         0.047
          3.834000,         0.045,   3.917000,         0.043
          4.000000,         0.042

*SPLDCASE    ; Spectrum Load Cases
; NAME=NAME, DIR, ANGLE, SCALE, PMFT, bDAMP, bECC, INTERP, DESC,       ; line 1
;      COMTYPE, bADDSIGN, iSIGNTYPE, bMODE, bASA, iMAJ                 ; line 2
;      FUNC1, FUNC2, FUNC3, ...                                        ; line 3
;      bUSE1, dFACTOR1, bUSE2, dFACTOR2, ..., bUSEn, dFACTORn          ; line 4      (
bMODE=YES)
;      bCDR, [DR-DC]                                                   ; line 5      (
bDAMP=YES)
;      SMETHOD, bAUTO, ECC, bCONSGL, bTORMOMENT                        ; line 6      (
bECC=YES)
;      STORY1, ECC1, STORY2, ECC2, ..., STORYn, ECCn                   ; from line 7 (
bECC=YES)
; [DR-DC] : iMDTYPE, DALL, iMODE1, DAMPING1, iMODE2, DAMPING2, ...     ; iMDTYPE=1
;         : iMDTYPE, iCOEF, bMASSP, MASSC, bSTIFFP, STIFFC             ; iMDTYPE=2, iC
OEF=1
;         : iMDTYPE, iCOEF, iCALC, bMASSP, FP1, DR1, bSTIFFP, FP2, DR2 ; iMDTYPE=2, iC
OEF=2
;         : iMDTYPE                                                    ; iMDTYPE=3
   NAME=sisma_x, XY, 0, 1, 1, NO, YES, LOG,
        CQC, YES, 0, YES, NO, 0
        Muscoline_T1_C_q=1__CU III
        YES, 1,YES, 1,YES, 1,YES, 1,YES, 1,YES, 1,YES, 1,YES, 1,YES, 1,YES, 1,YES, 1
        0, YES, 5, YES, NO
        Roof, 0.655603, 1F, 0.655603

   NAME=sisma_y, XY, 90, 1, 1, NO, YES, LOG,
        CQC, YES, 0, YES, NO, 0
        Muscoline_T1_C_q=1__CU III
        YES, 1,YES, 1,YES, 1,YES, 1,YES, 1,YES, 1,YES, 1,YES, 1,YES, 1,YES, 1,YES, 1
        0, YES, 5, YES, NO
        Roof, 0.8475, 1F, 0.8475
```

```
*PUSHOVER-CTRL    ; Pushover Global Control
; GEOM, bPERMIT, STEP, iMAX, bDISP, bFORCE, bENERGY, DNORM, FNORM, ENORM, bSTOP, bBEAM
, bWALL, METHOD, bAXIS, bAXISBEAM, bAXISWALL, bAXISTRUSS, SUPPORT, ELASTIC, bSUPPORT,
bSUPPORTUPLIFT, bSUPPORTCOLLAPSE, ; 1st line : Analysis Option
; NODECONNECTIVITY, nBEAMy, nBEAMz, bWALL, nWALLy, nWALLz, dR, WSize, bMEMB, nRCCODE,
bUseRef, bGraph, bCurve ; 1st line(2) : Analysis Option
; bSYMMETRIC, a1(+), a1(-), a2(+), a2(-)                                ; 2nd line : De
fault Stiffness Ratio(Trilinear)
; bSYMMETRIC, a1(+), a1(-)                                              ; 3rd line : De
fault Stiffness Ratio(Bilinear)
; BM_POS, bBUCKLING, bCR_AIJ, bIgnoreElem                               ; 4th line
; BM_POS, bBUCKLING, bCR_AIJ, 1, CF, WAL, bBTL, BTL, bERTH, ERTH, bSBR, SBR, GRP ; 4th
 line (Eurocode)
; BM_POS, bBUCKLING, bCR_AIJ, 2, bAXIAL_AIJ                             ; 4th line (AIJ
)
; LCNAME1, FACT1, LCNAME2, FACT2, ...                                   ; from line 5th
 line  : Initial Load
; LCTYPE1, LCTYPE2, ...                                                 ; Last line
       : Initial Load
   0, YES, 10, 10, YES, NO, NO, 0.001, 0.001, 0.001, NO, YES, NO, 0, NO, YES, NO, NO,
0, 1, NO, NO, NO, 1, 15, 15, NO, EQUAL, 20, 10, 0.4, NO, 0, NO, YES, YES
   YES, 0.1, 0.1, 0.05, 0.05
   YES, 0.05, 0.05
   I, NO, YES, YES, 1, 1, 1.6, NO, 1.6, NO, 0.85, NO, 0.575,
   PP, 1, G1+G2 copertura A, 3.7, G1+G2 copertura B, 1.5, Q sottotetto, 0.3
   sporto gronda, 2, travi, 3, parapetto, 1.5, muro, 4.6
   1, 1, 1, 1, 1, 1, 1, 1
*HINGE-TYPE    ; Pushover Hinge Type/Properties
; NAME=NAME, DESC                                                                        ;
1st line
; ELEM_TYP, WALL_TYP, MAT_TYP, DEFINITION, INTERACTION, bHINGELENGTH, INTEGRATION   ;
2nd line (ELEM_TYP=WALL)
; ELEM_TYP, MAT_TYP, DEFINITION, INTERACTION , bHINGELENGTH, INTEGRATION            ;
2nd line
; HINGE_TYPE, PROP, FIBER, FIBER_AUTO, AUTO_R, R, AUTO_OUTPL, OUTPL                 ;
3rd line
; bFx, HLOC[NSECT], [DISTR], [RAT_I], [RAT_J], SKCV, [M_PROP]   ; 4rd line
; bFy, HLOC[NSECT], [DISTR], [RAT_I], [RAT_J], SKCV, [M_PROP]   ; 5th line
; bFz, HLOC[NSECT], [DISTR], [RAT_I], [RAT_J], SKCV, [M_PROP]   ; 6th line
; bMx, HLOC[NSECT], [DISTR], [RAT_I], [RAT_J], SKCV, [M_PROP]   ; 7th line
; bMy, HLOC[NSECT], [DISTR], [RAT_I], [RAT_J], SKCV, [M_PROP]   ; 8th line
; bMz, HLOC[NSECT], [DISTR], [RAT_I], [RAT_J], SKCV, [M_PROP]   ; 9th line
; CALC, bSYM-IJ, [YSDATA]-I, [YSDATA]-J                  ; 10th line (MAT_TYPE=RC,STEE
L, INTERACTION=PMM)
; BLDG_TYPE, COMP, SHEAR, COEFF                          ; 10th line (MAT_TYPE=MASONRY
,  DEFINITION=PIER)
; COMP, SHEAR, FORC                                      ; 10th line (MAT_TYPE=MASONRY
,  DEFINITION=SPAN)
; [M_PROP] : CALC, TYPE, [PROP]
    ; (SKCV=BI,TRI,SLBI,SLTR)
; [M_PROP] : CALC, TYPE, bSYM_IJ, [PROP]-I, [PROP]-J
    ; (SKCV=BI,TRI,SLBI,SLTR, HLOC=IJ)
; [M_PROP] : CALC, [FEMA]
    ; (SKCV=FEMA)
; [M_PROP] : CALC, [EC8]
    ; (SKCV=EC8)
; [M_PROP] : CALC, bSYM_IJ, [FEMA]-I  [FEMA]-J
    ; (SKCV=FEMA, HLOC=IJ)
; [PROP] : bSYM, RATIO_OPT, [DATA]-TENS, [DATA]-COMP, STIF_METHOD, STIFF
    ; (SKCV=BI,TRI)
```

```
; [PROP] : bSYM, RATIO_OPT, [DATA]-TENS, [DATA]-COMP, STIF_METHOD, STIFF, bAutoSpan, S
PAN ; (SKCV=TRI, RATIO_OPT=AIJ)
; [PROP] : SLIP_TYPE, RATIO_OPT, [DATA]-TENS, [DATA]-COMP, STIF_METHOD, STIFF, IGT, IG
C    ; (SKCV=SLBI,SLTR)
; [DATA] : YS-P1, YS-P2, YS-P3, SRR1, SRR2, SRRy,
    ; (TYPE=RATIO)
; [DATA] : YS-P1, YS-P2, YS-P3, YD-D1, YD-D2, YD-D3
    ; (TYPE=DEFORM)
; [FEMA] : DEFORM, bSYM, bMULT, SUBCOUNT, YS-P1P, YS-P1N, bUSER-D, YD-D1P, YD-D1N,
;        : STIF_METHOD, STIFF, IO-P, LS-P, CP-P, IO-N, LS-N, CP-N, bUSER-RATIO
;        : bSHAPE, SHAPE, bSTRLOSS, STRLOSS, INFILLTYPE, bTOTALSTRLOSS, TOTALSTRLOSS,
UNLOADTYPE, dEXP, dPRFACT, INFILLSTIFF, KMI, KMS, HM, TM
;        : EN-FR, DN-FR, CN-FR, BN-FR, A-FR, BP-FR, CP-FR, DP-FR, EP-FR  ; F/FY or M/M
Y
;        : EN-DR, DN-DR, CN-DR, BN-DR, A-DR, BP-DR, CP-DR, DP-DR, EP-DR  ; D/DY
;        : AXIAL, IO-P, LS-P, CP-P, IO-N, LS-N, CP-N                     ; (bMULT=YES)
, Loop  SUBCOUNT
;        : EN-FR, DN-FR, CN-FR, BN-FR, A-FR, BP-FR, CP-FR, DP-FR, EP-FR  ; (bMULT=YES)
 F/FY or M/MY
;        : EN-DR, DN-DR, CN-DR, BN-DR, A-DR, BP-DR, CP-DR, DP-DR, EP-DR  ; (bMULT=YES)
 D/DY
; [EC8]  : bSYM, bMULT, SUBCOUNT, YS-P1P, YS-P1N, bUSER-D, YD-D1P, YD-D1N,
;        : STIF_METHOD, STIFF-P, STIFF-M, IO-P, LS-P, CP-P, IO-N, LS-N, CP-N, bUSER-RA
TIO
;        : EN-FR, DN-FR, CN-FR, BN-FR, A-FR, BP-FR, CP-FR, DP-FR, EP-FR  ; F/FY or M/M
Y
;        : EN-DR, DN-DR, CN-DR, BN-DR, A-DR, BP-DR, CP-DR, DP-DR, EP-DR  ; D/DY
; [YSDATA] : bSYM-YZ, bSYM-PN, PC0, PMAX,
;          : MY1-P, MY1-N, MY2-P, MY2-N, MZ1-P, MZ1-N, MZ2-P, MZ2-N,
;          : INTPOLATION, ALPHA, bSYM-Y, bSYM-Z, [YSPROP]-1ST,  [YSPROP]-2ND
; [YSPROP] : PY1P, PY2P, PY3P,..., PY10P, PY11P, MY1P, MY2P,..., MY10P, MY11P
;          : PY1N, PY2N, PY3N,..., PY10N, PY11N, MY1N, MY2N,..., MY10N, MY11N
;          : PZ1P, PZ2P, PZ3P,..., PZ10P, PZ11P, MZ1P, MZ2P,..., MZ10P, MZ11P
;          : PZ1N, PZ2N, PZ3N,..., PZ10N, PZ11N, MZ1N, MZ2N,..., MZ10N, MZ11N
  NAME=Maschi MA, Maschi
    BEAM, , MASONRY, PIER, NONE, NO, 0, 0.5, 0.5, 0.5, 0.5, YES
    0, 0, 0, 1, 0, 0.4, 0, NO, NONE
    YES, C, FEMA, USER, \
      D/DY, NO, NO, 1, 1, 1, NO, 0, 0, , ELASTIC, 0, 2, 4, 6, 2, 4, 6, YES, \
      NO, GENERAL, NO, YES, FULL, NO, NO, NO, ORIGIN_ORIENTED, 0.4, 0.5, ELASTIC, 2000
, 500, 1, 1, \
      -1.75, -1.75, -1.75, -1, 0, 5, 5, 5, 5, \
      -0.2, -0.2, -1, -1, 0, 0, 0, 0, 0
    NO
    YES, C, FEMA, USER, \
      D/DY, YES, NO, 1, 1, 1, NO, 0, 0, , ELASTIC, 0, 2, 4, 6, 2, 4, 6, YES, \
      NO, GENERAL, NO, YES, FULL, NO, NO, NO, ORIGIN_ORIENTED, 0.4, 0.5, ELASTIC, 2000
, 500, 1, 1, \
      -0.006, -0.004, -0.004, -0.001, 0, 0.001, 0.004, 0.004, 0.006, \
      -0.3, -0.3, -1.001, -1, 0, 1, 1.001, 0.3, 0.3
    NO
    YES, IJ, FEMA, USER, YES, \
      D/DY, YES, NO, 1, 1, 1, NO, 0, 0, , 6EI, 0, 2, 4, 6, 2, 4, 6, YES, \
      NO, GENERAL, NO, YES, FULL, NO, NO, NO, ORIGIN_ORIENTED, 0.4, 0.5, ELASTIC, 2000
, 500, 1, 1, \
      -0.009, -0.006, -0.006, -0.001, 0, 0.001, 0.006, 0.006, 0.009, \
      -0.3, -0.3, -1.001, -1, 0, 1, 1.001, 0.3, 0.3, \
      D/DY, YES, NO, 1, 1, 1, NO, 0, 0, , 6EI, 0, 2, 4, 6, 2, 4, 6, YES, \
      NO, GENERAL, NO, YES, FULL, NO, NO, NO, ORIGIN_ORIENTED, 0.4, 0.5, ELASTIC, 2000
, 500, 1, 1, \
      -0.009, -0.006, -0.006, -0.001, 0, 0.001, 0.006, 0.006, 0.009, \
      -0.3, -0.3, -1.001, -1, 0, 1, 1.001, 0.3, 0.3
```

```
    NO
    EXIST, 2560, 67, 0.85
  NAME=Pilastri c.a.,
    BEAM, , RC, MTHETA, PMM, NO, 0, 0.5, 0.5, 0.5, 0.5, YES
    0, 0, 0, 1, 0, 0.4, 0, NO, NONE
    YES, IJ, EC8, AUTO, YES, \
      D/DY, NO, NO, 1, 1, 1, NO, 1, 1, 1, ELASTIC, 0, 0, 1.25, 4, 6, 1, 1, 1, NO, \
      NO, GENERAL, NO, YES, FULL, NO, NO, NO, ORIGIN_ORIENTED, 0.4, 0.5, ELASTIC, 2000
, 500, 1, 1, \
      -8, -1.01, -1.01, -1, 0, 1, 6, 6, 8, \
      -0.2, -0.2, -1, -1, 0, 1, 1.001, 0.2, 0.2, \
      D/DY, NO, NO, 1, 1, 1, NO, 1, 1, 1, ELASTIC, 0, 0, 1.25, 4, 6, 1, 1, 1, NO, \
      NO, GENERAL, NO, YES, FULL, NO, NO, NO, ORIGIN_ORIENTED, 0.4, 0.5, ELASTIC, 2000
, 500, 1, 1, \
      -8, -1.01, -1.01, -1, 0, 1, 6, 6, 8, \
      -0.2, -0.2, -1, -1, 0, 1, 1.001, 0.2, 0.2
    YES, IJ, EC8, AUTO, YES, \
      D/DY, NO, NO, 1, 1, 1, NO, 1, 1, , ELASTIC, 0, 0, 1, 1, 1, 1, 1, 1, NO, \
      NO, GENERAL, NO, YES, FULL, NO, NO, NO, ORIGIN_ORIENTED, 0.4, 0.5, ELASTIC, 2000
, 500, 1, 1, \
      -8, -1.01, -1.01, -1, 0, 1, 1.01, 1.01, 8, \
      -0.2, -0.2, -1, -1, 0, 1, 1, 0.2, 0.2, \
      D/DY, NO, NO, 1, 1, 1, NO, 1, 1, , ELASTIC, 0, 0, 1, 1, 1, 1, 1, 1, NO, \
      NO, GENERAL, NO, YES, FULL, NO, NO, NO, ORIGIN_ORIENTED, 0.4, 0.5, ELASTIC, 2000
, 500, 1, 1, \
      -8, -1.01, -1.01, -1, 0, 1, 1.01, 1.01, 8, \
      -0.2, -0.2, -1, -1, 0, 1, 1, 0.2, 0.2
    YES, IJ, EC8, AUTO, YES, \
      D/DY, NO, NO, 1, 1, 1, NO, 1, 1, , ELASTIC, 0, 0, 1, 1, 1, 1, 1, 1, NO, \
      NO, GENERAL, NO, YES, FULL, NO, NO, NO, ORIGIN_ORIENTED, 0.4, 0.5, ELASTIC, 2000
, 500, 1, 1, \
      -8, -1.01, -1.01, -1, 0, 1, 1.01, 1.01, 8, \
      -0.2, -0.2, -1, -1, 0, 1, 1, 0.2, 0.2, \
      D/DY, NO, NO, 1, 1, 1, NO, 1, 1, , ELASTIC, 0, 0, 1, 1, 1, 1, 1, 1, NO, \
      NO, GENERAL, NO, YES, FULL, NO, NO, NO, ORIGIN_ORIENTED, 0.4, 0.5, ELASTIC, 2000
, 500, 1, 1, \
      -8, -1.01, -1.01, -1, 0, 1, 1.01, 1.01, 8, \
      -0.2, -0.2, -1, -1, 0, 1, 1, 0.2, 0.2
    NO
    YES, IJ, EC8, AUTO, YES, \
      D/DY, NO, NO, 1, 1, 1, NO, 1, 1, 1, 6EI, 1, 1, 1, 0.75, 1, 1, 0.75, 1, NO, \
      NO, GENERAL, NO, YES, FULL, NO, NO, NO, ORIGIN_ORIENTED, 0.4, 0.5, ELASTIC, 2000
, 500, 1, 1, \
      -12, -9, -9, -1, 0, 1, 9, 9, 12, \
      -0.2, -0.2, -1.001, -1, 0, 1, 1.001, 0.2, 0.2, \
      D/DY, NO, NO, 1, 1, 1, NO, 1, 1, 1, 6EI, 1, 1, 1, 0.75, 1, 1, 0.75, 1, NO, \
      NO, GENERAL, NO, YES, FULL, NO, NO, NO, ORIGIN_ORIENTED, 0.4, 0.5, ELASTIC, 2000
, 500, 1, 1, \
      -12, -9, -9, -1, 0, 1, 9, 9, 12, \
      -0.2, -0.2, -1.001, -1, 0, 1, 1.001, 0.2, 0.2
    YES, IJ, EC8, AUTO, YES, \
      D/DY, NO, NO, 1, 1, 1, NO, 1, 1, 1, 6EI, 1, 1, 1, 0.75, 1, 1, 0.75, 1, NO, \
      NO, GENERAL, NO, YES, FULL, NO, NO, NO, ORIGIN_ORIENTED, 0.4, 0.5, ELASTIC, 2000
, 500, 1, 1, \
      -12, -9, -9, -1, 0, 1, 9, 9, 12, \
      -0.2, -0.2, -1.001, -1, 0, 1, 1.001, 0.2, 0.2, \
      D/DY, NO, NO, 1, 1, 1, NO, 1, 1, 1, 6EI, 1, 1, 1, 0.75, 1, 1, 0.75, 1, NO, \
      NO, GENERAL, NO, YES, FULL, NO, NO, NO, ORIGIN_ORIENTED, 0.4, 0.5, ELASTIC, 2000
, 500, 1, 1, \
      -12, -9, -9, -1, 0, 1, 9, 9, 12, \
      -0.2, -0.2, -1.001, -1, 0, 1, 1.001, 0.2, 0.2
    AUTO, YES, NO, YES, 0.5, 1, 0.5, 0.5, 1, 1, 0.5, 0.5, 1, 1, ELLIPSE, 2, YES, YES,
```

```
\
      1, 0.8, 0.6, 0.4, 0.2, 0, -0.2, -0.4, -0.6, -0.8, -1, 0, 0.3, 0.6, 0.8, 0.9, 1,
0.9, 0.8, 0.6, 0.3, 0, \
      1, 0.8, 0.6, 0.4, 0.2, 0, -0.2, -0.4, -0.6, -0.8, -1, -0, -0.3, -0.6, -0.8, -0.9
, -1, -0.9, -0.8, -0.6, -0.3, -0, \
      1, 0.8, 0.6, 0.4, 0.2, 0, -0.2, -0.4, -0.6, -0.8, -1, 0, 0.3, 0.6, 0.8, 0.9, 1,
0.9, 0.8, 0.6, 0.3, 0, \
      1, 0.8, 0.6, 0.4, 0.2, 0, -0.2, -0.4, -0.6, -0.8, -1, -0, -0.3, -0.6, -0.8, -0.9
, -1, -0.9, -0.8, -0.6, -0.3, -0, \
      1, 0.8, 0.6, 0.4, 0.2, 0, -0.2, -0.4, -0.6, -0.8, -1, 0, 0.3, 0.6, 0.8, 0.9, 1,
0.9, 0.8, 0.6, 0.3, 0, \
      1, 0.8, 0.6, 0.4, 0.2, 0, -0.2, -0.4, -0.6, -0.8, -1, -0, -0.3, -0.6, -0.8, -0.9
, -1, -0.9, -0.8, -0.6, -0.3, -0, \
      1, 0.8, 0.6, 0.4, 0.2, 0, -0.2, -0.4, -0.6, -0.8, -1, 0, 0.3, 0.6, 0.8, 0.9, 1,
0.9, 0.8, 0.6, 0.3, 0, \
      1, 0.8, 0.6, 0.4, 0.2, 0, -0.2, -0.4, -0.6, -0.8, -1, -0, -0.3, -0.6, -0.8, -0.9
, -1, -0.9, -0.8, -0.6, -0.3, -0 , \
      NO, YES, 0.5, 1, 0.5, 0.5, 1, 1, 0.5, 0.5, 1, 1, ELLIPSE, 2, YES, YES, \
      1, 0.8, 0.6, 0.4, 0.2, 0, -0.2, -0.4, -0.6, -0.8, -1, 0, 0.3, 0.6, 0.8, 0.9, 1,
0.9, 0.8, 0.6, 0.3, 0, \
      1, 0.8, 0.6, 0.4, 0.2, 0, -0.2, -0.4, -0.6, -0.8, -1, -0, -0.3, -0.6, -0.8, -0.9
, -1, -0.9, -0.8, -0.6, -0.3, -0, \
      1, 0.8, 0.6, 0.4, 0.2, 0, -0.2, -0.4, -0.6, -0.8, -1, 0, 0.3, 0.6, 0.8, 0.9, 1,
0.9, 0.8, 0.6, 0.3, 0, \
      1, 0.8, 0.6, 0.4, 0.2, 0, -0.2, -0.4, -0.6, -0.8, -1, -0, -0.3, -0.6, -0.8, -0.9
, -1, -0.9, -0.8, -0.6, -0.3, -0, \
      1, 0.8, 0.6, 0.4, 0.2, 0, -0.2, -0.4, -0.6, -0.8, -1, 0, 0.3, 0.6, 0.8, 0.9, 1,
0.9, 0.8, 0.6, 0.3, 0, \
      1, 0.8, 0.6, 0.4, 0.2, 0, -0.2, -0.4, -0.6, -0.8, -1, -0, -0.3, -0.6, -0.8, -0.9
, -1, -0.9, -0.8, -0.6, -0.3, -0, \
      1, 0.8, 0.6, 0.4, 0.2, 0, -0.2, -0.4, -0.6, -0.8, -1, 0, 0.3, 0.6, 0.8, 0.9, 1,
0.9, 0.8, 0.6, 0.3, 0, \
      1, 0.8, 0.6, 0.4, 0.2, 0, -0.2, -0.4, -0.6, -0.8, -1, -0, -0.3, -0.6, -0.8, -0.9
, -1, -0.9, -0.8, -0.6, -0.3, -0
  NAME=Pilastri fitt MA, Pilastri fitt
    BEAM, , MASONRY, PIER, NONE, NO, 0, 0.5, 0.5, 0.5, 0.5, YES
    0, 0, 0, 1, 0, 0.4, 0, NO, NONE
    YES, C, FEMA, USER, \
      D/DY, NO, NO, 1, 1, 1, NO, 0, 0, , ELASTIC, 0, 2, 4, 6, 2, 4, 6, YES, \
      NO, GENERAL, NO, YES, FULL, NO, NO, NO, ORIGIN_ORIENTED, 0.4, 0.5, ELASTIC, 2000
, 500, 1, 1, \
      -1.75, -1.75, -1.75, -1, 0, 5, 5, 5, 5, \
      -0.2, -0.2, -1, -1, 0, 0, 0, 0, 0
    NO
    NO
    NO
    NO
    NO
    EXIST, 2560, 67, 0.85
  NAME=Fasce MA, Fasce
    BEAM, , MASONRY, SPAN, NONE, NO, 0, 0.5, 0.5, 0.5, 0.5, YES
    0, 0, 0, 1, 0, 0.4, 0, NO, NONE
    YES, C, FEMA, USER, \
      D/DY, NO, NO, 1, 1, 1, NO, 0, 0, , ELASTIC, 0, 2, 4, 6, 2, 4, 6, YES, \
      NO, GENERAL, NO, YES, FULL, NO, NO, NO, ORIGIN_ORIENTED, 0.4, 0.5, ELASTIC, 2000
, 500, 1, 1, \
      -1.75, -1.75, -1.75, -1, 0, 5, 5, 5, 5, \
      -0.2, -0.2, -1, -1, 0, 0, 0, 0, 0
    NO
    YES, C, FEMA, USER, \
      D/DY, YES, NO, 1, 1, 1, NO, 0, 0, , ELASTIC, 0, 2, 4, 6, 2, 4, 6, YES, \
      NO, GENERAL, NO, YES, FULL, NO, NO, NO, ORIGIN_ORIENTED, 0.4, 0.5, ELASTIC, 2000
```

```
, 500, 1, 1, \
      -0.006, -0.004, -0.004, -0.001, 0, 0.001, 0.004, 0.004, 0.006, \
      -0.3, -0.3, -1.001, -1, 0, 1, 1.001, 0.3, 0.3
    NO
    YES, IJ, FEMA, USER, YES, \
      D/DY, YES, NO, 1, 1, 1, NO, 0, 0, , 6EI, 0, 2, 4, 6, 2, 4, 6, YES, \
      NO, GENERAL, NO, YES, FULL, NO, NO, NO, ORIGIN_ORIENTED, 0.4, 0.5, ELASTIC, 2000
, 500, 1, 1, \
      -0.012, -0.008, -0.008, -0.001, 0, 0.001, 0.008, 0.008, 0.012, \
      -0.3, -0.3, -1.001, -1, 0, 1, 1.001, 0.3, 0.3, \
      D/DY, YES, NO, 1, 1, 1, NO, 0, 0, , 6EI, 0, 2, 4, 6, 2, 4, 6, YES, \
      NO, GENERAL, NO, YES, FULL, NO, NO, NO, ORIGIN_ORIENTED, 0.4, 0.5, ELASTIC, 2000
, 500, 1, 1, \
      -0.012, -0.008, -0.008, -0.001, 0, 0.001, 0.008, 0.008, 0.012, \
      -0.3, -0.3, -1.001, -1, 0, 1, 1.001, 0.3, 0.3
    NO
    2560, 67, 80
  NAME=Maschi MB, Maschi
    BEAM, , MASONRY, PIER, NONE, NO, 0, 0.5, 0.5, 0.5, 0.5, YES
    0, 0, 0, 1, 0, 0.4, 0, NO, NONE
    YES, C, FEMA, USER, \
      D/DY, NO, NO, 1, 1, 1, NO, 0, 0, , ELASTIC, 0, 2, 4, 6, 2, 4, 6, YES, \
      NO, GENERAL, NO, YES, FULL, NO, NO, NO, ORIGIN_ORIENTED, 0.4, 0.5, ELASTIC, 2000
, 500, 1, 1, \
      -1.75, -1.75, -1.75, -1, 0, 5, 5, 5, 5, \
      -0.2, -0.2, -1, -1, 0, 0, 0, 0, 0
    NO
    YES, C, FEMA, USER, \
      D/DY, YES, NO, 1, 1, 1, NO, 0, 0, , ELASTIC, 0, 2, 4, 6, 2, 4, 6, YES, \
      NO, GENERAL, NO, YES, FULL, NO, NO, NO, ORIGIN_ORIENTED, 0.4, 0.5, ELASTIC, 2000
, 500, 1, 1, \
      -0.006, -0.004, -0.004, -0.001, 0, 0.001, 0.004, 0.004, 0.006, \
      -0.3, -0.3, -1.001, -1, 0, 1, 1.001, 0.3, 0.3
    NO
    YES, IJ, FEMA, USER, YES, \
      D/DY, YES, NO, 1, 1, 1, NO, 0, 0, , 6EI, 0, 2, 4, 6, 2, 4, 6, YES, \
      NO, GENERAL, NO, YES, FULL, NO, NO, NO, ORIGIN_ORIENTED, 0.4, 0.5, ELASTIC, 2000
, 500, 1, 1, \
      -0.009, -0.006, -0.006, -0.001, 0, 0.001, 0.006, 0.006, 0.009, \
      -0.3, -0.3, -1.001, -1, 0, 1, 1.001, 0.3, 0.3, \
      D/DY, YES, NO, 1, 1, 1, NO, 0, 0, , 6EI, 0, 2, 4, 6, 2, 4, 6, YES, \
      NO, GENERAL, NO, YES, FULL, NO, NO, NO, ORIGIN_ORIENTED, 0.4, 0.5, ELASTIC, 2000
, 500, 1, 1, \
      -0.009, -0.006, -0.006, -0.001, 0, 0.001, 0.006, 0.006, 0.009, \
      -0.3, -0.3, -1.001, -1, 0, 1, 1.001, 0.3, 0.3
    NO
    EXIST, 3700, 259, 0.85
  NAME=Pilastri fitt MB, Pilastri fitt
    BEAM, , MASONRY, PIER, NONE, NO, 0, 0.5, 0.5, 0.5, 0.5, YES
    0, 0, 0, 1, 0, 0.4, 0, NO, NONE
    YES, C, FEMA, USER, \
      D/DY, NO, NO, 1, 1, 1, NO, 0, 0, , ELASTIC, 0, 2, 4, 6, 2, 4, 6, YES, \
      NO, GENERAL, NO, YES, FULL, NO, NO, NO, ORIGIN_ORIENTED, 0.4, 0.5, ELASTIC, 2000
, 500, 1, 1, \
      -1.75, -1.75, -1.75, -1, 0, 5, 5, 5, 5, \
      -0.2, -0.2, -1, -1, 0, 0, 0, 0, 0
    NO
    NO
    NO
    NO
    NO
    EXIST, 3700, 259, 0.85
```

```
  NAME=Fasce MB, Fasce
    BEAM, , MASONRY, SPAN, NONE, NO, 0, 0.5, 0.5, 0.5, 0.5, YES
    0, 0, 0, 1, 0, 0.4, 0, NO, NONE
    YES, C, FEMA, USER, \
      D/DY, NO, NO, 1, 1, 1, NO, 0, 0, , ELASTIC, 0, 2, 4, 6, 2, 4, 6, YES, \
      NO, GENERAL, NO, YES, FULL, NO, NO, NO, ORIGIN_ORIENTED, 0.4, 0.5, ELASTIC, 2000
, 500, 1, 1, \
      -1.75, -1.75, -1.75, -1, 0, 5, 5, 5, 5, \
      -0.2, -0.2, -1, -1, 0, 0, 0, 0, 0
    NO
    YES, C, FEMA, USER, \
      D/DY, YES, NO, 1, 1, 1, NO, 0, 0, , ELASTIC, 0, 2, 4, 6, 2, 4, 6, YES, \
      NO, GENERAL, NO, YES, FULL, NO, NO, NO, ORIGIN_ORIENTED, 0.4, 0.5, ELASTIC, 2000
, 500, 1, 1, \
      -0.006, -0.004, -0.004, -0.001, 0, 0.001, 0.004, 0.004, 0.006, \
      -0.3, -0.3, -1.001, -1, 0, 1, 1.001, 0.3, 0.3
    NO
    YES, IJ, FEMA, USER, YES, \
      D/DY, YES, NO, 1, 1, 1, NO, 0, 0, , 6EI, 0, 2, 4, 6, 2, 4, 6, YES, \
      NO, GENERAL, NO, YES, FULL, NO, NO, NO, ORIGIN_ORIENTED, 0.4, 0.5, ELASTIC, 2000
, 500, 1, 1, \
      -0.012, -0.008, -0.008, -0.001, 0, 0.001, 0.008, 0.008, 0.012, \
      -0.3, -0.3, -1.001, -1, 0, 1, 1.001, 0.3, 0.3, \
      D/DY, YES, NO, 1, 1, 1, NO, 0, 0, , 6EI, 0, 2, 4, 6, 2, 4, 6, YES, \
      NO, GENERAL, NO, YES, FULL, NO, NO, NO, ORIGIN_ORIENTED, 0.4, 0.5, ELASTIC, 2000
, 500, 1, 1, \
      -0.012, -0.008, -0.008, -0.001, 0, 0.001, 0.008, 0.008, 0.012, \
      -0.3, -0.3, -1.001, -1, 0, 1, 1.001, 0.3, 0.3
    NO
    3700, 259, 80

*HINGE-ASSIGN    ; Assign Pushover Hinge
; TYPE=TYPE_NAME, ELEM_NO(GLINK_NO), HINGE_TYP, FIBER_KEY  ; 1st line
  TYPE=BEAM, 3, Maschi MA, 0
  TYPE=BEAM, 6, Maschi MA, 0
  TYPE=BEAM, 7, Maschi MA, 0
  TYPE=BEAM, 13, Maschi MA, 0
  TYPE=BEAM, 14, Maschi MA, 0
  TYPE=BEAM, 20, Maschi MA, 0
  TYPE=BEAM, 21, Maschi MA, 0
  TYPE=BEAM, 22, Maschi MA, 0
  TYPE=BEAM, 23, Maschi MA, 0
  TYPE=BEAM, 25, Maschi MB, 0
  TYPE=BEAM, 28, Maschi MB, 0
  TYPE=BEAM, 29, Maschi MB, 0
  TYPE=BEAM, 31, Maschi MA, 0
  TYPE=BEAM, 32, Maschi MB, 0
  TYPE=BEAM, 35, Maschi MA, 0
  TYPE=BEAM, 36, Maschi MA, 0
  TYPE=BEAM, 37, Maschi MA, 0
  TYPE=BEAM, 38, Maschi MA, 0
  TYPE=BEAM, 41, Pilastri fitt MA, 0
  TYPE=BEAM, 2000, Pilastri fitt MB, 0
  TYPE=BEAM, 2004, Pilastri fitt MA, 0
  TYPE=BEAM, 2005, Pilastri fitt MA, 0
  TYPE=BEAM, 2008, Pilastri fitt MA, 0
  TYPE=BEAM, 2009, Pilastri fitt MA, 0
  TYPE=BEAM, 2011, Pilastri fitt MA, 0
  TYPE=BEAM, 2012, Pilastri fitt MA, 0
  TYPE=BEAM, 6098, Pilastri c.a., 0
  TYPE=BEAM, 6099, Pilastri c.a., 0
  TYPE=BEAM, 6104, Pilastri fitt MA, 0
```

```
  TYPE=BEAM, 6107, Maschi MA, 0
  TYPE=BEAM, 6159, Fasce MB, 0
  TYPE=BEAM, 6161, Fasce MB, 0
  TYPE=BEAM, 6169, Fasce MB, 0
  TYPE=BEAM, 6174, Maschi MA, 0
  TYPE=BEAM, 6184, Maschi MA, 0
  TYPE=BEAM, 6195, Fasce MA, 0
  TYPE=BEAM, 6197, Fasce MA, 0
  TYPE=BEAM, 6200, Fasce MA, 0
  TYPE=BEAM, 6201, Fasce MA, 0
  TYPE=BEAM, 6203, Fasce MA, 0
  TYPE=BEAM, 6213, Fasce MA, 0
  TYPE=BEAM, 6215, Fasce MA, 0
  TYPE=BEAM, 6218, Maschi MB, 0

*PUSHOVER-LOAD   ; Pushover Load Cases
; NAME=NAME, DESC,                                      ; 1st line
; STEP, bUSEINILOAD, bPDELTA, METHOD, bREAC, bDISP  ; 2nd line
; CTRL_OPT, INC_FUNCTION, ANAL_RATIO                    ; 3rd line (METHOD=LOAD)
; CTRL_OPT, DISPL                                       ; 3rd line (METHOD=DISP, CTRL_OPT=
GLOBAL)
; CTRL_OPT, MNODE, DIR, DISPL                           ; 3rd line (METHOD=DISP, CTRL_OPT=
MNODE)
; bANAL_LIMIT, VALUE, LOAD_PATTERN                      ; 4th line
; DIR, SCALE                                            ; 5th line (LOAD_PATTERN=UNIFORM)
; MODE, SCALE                                           ; 5th line (LOAD_PATTERN=MODE)
; LCNAME1, SCALE1, LCNAME2, SCALE2, ...                 ; from 5th line (LOAD_PATTERN=STAT
IC)
   NAME=GU1 +X,
        200, YES, NO, DISP, YES, NO, NO, 20
        MNODE, 180, DX, 0.03
        NO, 10, STATIC, YES, NO, NO, 10, 10
        SISMA X, 1
   NAME=GU1 -X,
        200, YES, NO, DISP, YES, NO, NO, 20
        MNODE, 180, DX, -0.03
        NO, 10, STATIC, YES, NO, NO, 10, 10
        SISMA X, -1
   NAME=GU1 +Y,
        200, YES, NO, DISP, YES, NO, NO, 20
        MNODE, 180, DY, 0.03
        NO, 10, STATIC, YES, NO, NO, 10, 10
        SISMA Y, 1
   NAME=GU1 -Y,
        500, YES, NO, DISP, YES, NO, NO, 20
        MNODE, 183, DY, -0.03
        NO, 10, STATIC, YES, NO, NO, 10, 10
        SISMA Y, -1
   NAME=GU2 +X,
        200, YES, NO, DISP, YES, NO, NO, 20
        MNODE, 180, DX, 0.03
        NO, 10, UNIFORM, YES, NO, NO, 10, 10
        DX, 1
   NAME=GU2 -X,
        200, YES, NO, DISP, YES, NO, NO, 20
        MNODE, 180, DX, -0.03
        NO, 10, UNIFORM, YES, NO, NO, 10, 10
        DX, -1
   NAME=GU2 +Y,
        200, YES, NO, DISP, YES, NO, NO, 20
        MNODE, 180, DY, 0.03
        NO, 10, UNIFORM, YES, NO, NO, 10, 10
```

```
        DY, 1
   NAME=GU2 -Y,
        200, YES, NO, DISP, YES, NO, NO, 20
        MNODE, 183, DY, -0.03
        NO, 10, UNIFORM, YES, NO, NO, 10, 10
        DY, -1

*LOADCOMB    ; Combinations
; NAME=NAME, KIND, ACTIVE, bES, iTYPE, DESC, iSERV-TYPE, nLCOMTYPE   ; line 1
;      ANAL1, LCNAME1, FACT1, ...                                    ; from line 2
   NAME=SISMA V, CONC, STRENGTH, 0, 0, , 0, 0
        ST, PP, 1, ST, G1+G2 copertura A, 3.7, ST, G1+G2 copertura B, 1.5
        ST, Q sottotetto, 0.3, ST, sporto gronda, 2, ST, travi, 3
        ST, parapetto, 1.5, ST, muro, 4.6
   NAME=sisma_1, CONC, STRENGTH, 0, 0, , 0, 0
        RS, sisma_x, 1, RS, sisma_y, 0.3, ES, sisma_x, 1, ES, sisma_y, 0.3
        CBC, SISMA V, 1
   NAME=sisma_2, CONC, STRENGTH, 0, 0, , 0, 0
        RS, sisma_x, 1, RS, sisma_y, 0.3, ES, sisma_x, 1, ES, sisma_y, -0.3
        CBC, SISMA V, 1
   NAME=sisma_3, CONC, STRENGTH, 0, 0, , 0, 0
        RS, sisma_x, 1, RS, sisma_y, 0.3, ES, sisma_x, -1, ES, sisma_y, 0.3
        CBC, SISMA V, 1
   NAME=sisma_4, CONC, STRENGTH, 0, 0, , 0, 0
        RS, sisma_x, 1, RS, sisma_y, 0.3, ES, sisma_x, -1, ES, sisma_y, -0.3
        CBC, SISMA V, 1
   NAME=sisma_5, CONC, STRENGTH, 0, 0, , 0, 0
        RS, sisma_x, 1, RS, sisma_y, -0.3, ES, sisma_x, 1, ES, sisma_y, 0.3
        CBC, SISMA V, 1
   NAME=sisma_6, CONC, STRENGTH, 0, 0, , 0, 0
        RS, sisma_x, 1, RS, sisma_y, -0.3, ES, sisma_x, 1, ES, sisma_y, -0.3
        CBC, SISMA V, 1
   NAME=sisma_7, CONC, STRENGTH, 0, 0, , 0, 0
        RS, sisma_x, 1, RS, sisma_y, -0.3, ES, sisma_x, -1, ES, sisma_y, 0.3
        CBC, SISMA V, 1
   NAME=sisma_8, CONC, STRENGTH, 0, 0, , 0, 0
        RS, sisma_x, 1, RS, sisma_y, -0.3, ES, sisma_x, -1, ES, sisma_y, -0.3
        CBC, SISMA V, 1
   NAME=sisma_9, CONC, STRENGTH, 0, 0, , 0, 0
        RS, sisma_x, -1, RS, sisma_y, 0.3, ES, sisma_x, 1, ES, sisma_y, 0.3
        CBC, SISMA V, 1
   NAME=sisma_10, CONC, STRENGTH, 0, 0, , 0, 0
        RS, sisma_x, -1, RS, sisma_y, 0.3, ES, sisma_x, 1, ES, sisma_y, -0.3
        CBC, SISMA V, 1
   NAME=sisma_11, CONC, STRENGTH, 0, 0, , 0, 0
        RS, sisma_x, -1, RS, sisma_y, 0.3, ES, sisma_x, -1, ES, sisma_y, 0.3
        CBC, SISMA V, 1
   NAME=sisma_12, CONC, STRENGTH, 0, 0, , 0, 0
        RS, sisma_x, -1, RS, sisma_y, 0.3, ES, sisma_x, -1, ES, sisma_y, -0.3
        CBC, SISMA V, 1
   NAME=sisma_13, CONC, STRENGTH, 0, 0, , 0, 0
        RS, sisma_x, -1, RS, sisma_y, -0.3, ES, sisma_x, 1, ES, sisma_y, 0.3
        CBC, SISMA V, 1
   NAME=sisma_14, CONC, STRENGTH, 0, 0, , 0, 0
        RS, sisma_x, -1, RS, sisma_y, -0.3, ES, sisma_x, 1, ES, sisma_y, -0.3
        CBC, SISMA V, 1
   NAME=sisma_15, CONC, STRENGTH, 0, 0, , 0, 0
        RS, sisma_x, -1, RS, sisma_y, -0.3, ES, sisma_x, -1, ES, sisma_y, 0.3
        CBC, SISMA V, 1
   NAME=sisma_16, CONC, STRENGTH, 0, 0, , 0, 0
        RS, sisma_x, -1, RS, sisma_y, -0.3, ES, sisma_x, -1, ES, sisma_y, -0.3
        CBC, SISMA V, 1
```

```
NAME=sisma_17, CONC, STRENGTH, 0, 0, , 0, 0
     RS, sisma_x, 0.3, RS, sisma_y, 1, ES, sisma_x, 0.3, ES, sisma_y, 1
     CBC, SISMA V, 1
NAME=sisma_18, CONC, STRENGTH, 0, 0, , 0, 0
     RS, sisma_x, 0.3, RS, sisma_y, 1, ES, sisma_x, -0.3, ES, sisma_y, 1
     CBC, SISMA V, 1
NAME=sisma_19, CONC, STRENGTH, 0, 0, , 0, 0
     RS, sisma_x, 0.3, RS, sisma_y, 1, ES, sisma_x, 0.3, ES, sisma_y, -1
     CBC, SISMA V, 1
NAME=sisma_20, CONC, STRENGTH, 0, 0, , 0, 0
     RS, sisma_x, 0.3, RS, sisma_y, 1, ES, sisma_x, -0.3, ES, sisma_y, -1
     CBC, SISMA V, 1
NAME=sisma_21, CONC, STRENGTH, 0, 0, , 0, 0
     RS, sisma_x, -0.3, RS, sisma_y, 1, ES, sisma_x, 0.3, ES, sisma_y, 1
     CBC, SISMA V, 1
NAME=sisma_22, CONC, STRENGTH, 0, 0, , 0, 0
     RS, sisma_x, -0.3, RS, sisma_y, 1, ES, sisma_x, -0.3, ES, sisma_y, 1
     CBC, SISMA V, 1
NAME=sisma_23, CONC, STRENGTH, 0, 0, , 0, 0
     RS, sisma_x, -0.3, RS, sisma_y, 1, ES, sisma_x, 0.3, ES, sisma_y, -1
     CBC, SISMA V, 1
NAME=sisma_24, CONC, STRENGTH, 0, 0, , 0, 0
     RS, sisma_x, -0.3, RS, sisma_y, 1, ES, sisma_x, -0.3, ES, sisma_y, -1
     CBC, SISMA V, 1
NAME=sisma_25, CONC, STRENGTH, 0, 0, , 0, 0
     RS, sisma_x, 0.3, RS, sisma_y, -1, ES, sisma_x, 0.3, ES, sisma_y, 1
     CBC, SISMA V, 1
NAME=sisma_26, CONC, STRENGTH, 0, 0, , 0, 0
     RS, sisma_x, 0.3, RS, sisma_y, -1, ES, sisma_x, -0.3, ES, sisma_y, 1
     CBC, SISMA V, 1
NAME=sisma_27, CONC, STRENGTH, 0, 0, , 0, 0
     RS, sisma_x, 0.3, RS, sisma_y, -1, ES, sisma_x, 0.3, ES, sisma_y, -1
     CBC, SISMA V, 1
NAME=sisma_28, CONC, STRENGTH, 0, 0, , 0, 0
     RS, sisma x, 0.3, RS, sisma_y, -1, ES, sisma_x, -0.3, ES, sisma_y, -1
     CBC, SISMA V, 1
NAME=sisma_29, CONC, STRENGTH, 0, 0, , 0, 0
     RS, sisma_x, -0.3, RS, sisma_y, -1, ES, sisma_x, 0.3, ES, sisma_y, 1
     CBC, SISMA V, 1
NAME=sisma_30, CONC, STRENGTH, 0, 0, , 0, 0
     RS, sisma x, -0.3, RS, sisma_y, -1, ES, sisma_x, -0.3, ES, sisma_y, 1
     CBC, SISMA V, 1
NAME=sisma_31, CONC, STRENGTH, 0, 0, , 0, 0
     RS, sisma_x, -0.3, RS, sisma_y, -1, ES, sisma_x, 0.3, ES, sisma_y, -1
     CBC, SISMA V, 1
NAME=sisma_32, CONC, STRENGTH, 0, 0, , 0, 0
     RS, sisma_x, -0.3, RS, sisma_y, -1, ES, sisma_x, -0.3, ES, sisma_y, -1
     CBC, SISMA V, 1
NAME=ENVELOPE, CONC, SPECIAL, 0, 1, , 0, 0
     CBC, sisma_1, 1, CBC, sisma_2, 1, CBC, sisma_3, 1, CBC, sisma_4, 1
     CBC, sisma_5, 1, CBC, sisma_6, 1, CBC, sisma_7, 1, CBC, sisma_8, 1
     CBC, sisma_9, 1, CBC, sisma_10, 1, CBC, sisma_11, 1, CBC, sisma_12, 1
     CBC, sisma_13, 1, CBC, sisma_14, 1, CBC, sisma_15, 1, CBC, sisma_16, 1
     CBC, sisma_17, 1, CBC, sisma_18, 1, CBC, sisma_19, 1, CBC, sisma_20, 1
     CBC, sisma_21, 1, CBC, sisma_22, 1, CBC, sisma_23, 1, CBC, sisma_24, 1
     CBC, sisma_25, 1, CBC, sisma_26, 1, CBC, sisma_27, 1, CBC, sisma_28, 1
     CBC, sisma_29, 1, CBC, sisma_30, 1, CBC, sisma_31, 1, CBC, sisma_32, 1
NAME=SLU, CONC, INACTIVE, 0, 0, , 0, 0
     ST, PP, 1.3, ST, G1+G2 copertura A, 4.81, ST, G1+G2 copertura B, 1.95
     ST, Q sottotetto, 0.75, ST, sporto gronda, 2.6, ST, Q neve, 1.86
     ST, travi, 3.9, ST, parapetto, 2.25, ST, muro, 5.98
```

```
*LC-COLOR    ; Diagram Color for Load Case
; ANAL, LCNAME, iR1(ALL), iG1(ALL), iB1(ALL), iR2(MIN), iG2(MIN), iB2(MIN), iR3(MAX),
iG2(MAX), iB2(MAX)
 ST, parapetto, 0, 128, 57, 192, 0, 128, 192, 0, 128
 ST, PP, 78, 0, 255, 255, 160, 255, 163, 255, 160
 PO, GU1 +X, 210, 210, 210, 163, 160, 255, 192, 192, 192
 PO, GU1 -X, 255, 255, 255, 0, 192, 128, 255, 192, 87
 PO, GU1 +Y, 192, 0, 128, 255, 0, 192, 255, 160, 255
 CBC, SISMA V, 212, 160, 255, 148, 87, 255, 148, 87, 255
 CBC, sisma_1, 160, 192, 255, 255, 192, 160, 0, 128, 192
 PO, GU1 -Y, 0, 157, 192, 255, 160, 255, 93, 255, 87
 CBC, sisma_2, 255, 255, 87, 192, 0, 128, 255, 87, 128
 RS, sisma_x, 0, 128, 57, 192, 128, 0, 163, 255, 160
 ES, sisma_x, 0, 157, 192, 78, 0, 255, 163, 255, 160
 RS, sisma_y, 192, 0, 128, 163, 160, 255, 163, 255, 160
 ES, sisma_y, 192, 72, 0, 255, 87, 128, 210, 210, 210
 CBC, sisma_3, 0, 128, 57, 192, 72, 0, 192, 0, 128
 CBC, sisma_4, 160, 255, 255, 255, 160, 255, 163, 255, 160
 CBC, sisma_5, 0, 128, 192, 0, 192, 192, 163, 160, 255
 CBC, sisma_6, 255, 192, 87, 192, 128, 0, 255, 128, 0
 CBC, sisma_7, 0, 192, 192, 255, 0, 192, 255, 128, 0
 CBC, sisma_8, 146, 0, 255, 0, 128, 255, 255, 192, 87
 CBC, sisma_9, 78, 0, 255, 0, 192, 128, 128, 192, 0
 CBC, sisma_10, 192, 72, 0, 192, 128, 0, 255, 128, 0
 CBC, sisma_11, 255, 192, 160, 192, 0, 192, 0, 128, 57
 CBC, sisma_12, 192, 0, 128, 146, 0, 255, 255, 255, 255
 CBC, sisma_13, 255, 0, 128, 78, 0, 255, 212, 160, 255
 CBC, sisma_14, 255, 87, 87, 85, 192, 0, 146, 0, 255
 CBC, sisma_15, 0, 128, 128, 255, 160, 255, 255, 128, 0
 CBC, sisma_16, 163, 255, 160, 0, 128, 57, 160, 192, 255
 CBC, sisma_17, 192, 0, 192, 160, 192, 255, 192, 72, 0
 CBC, sisma_18, 148, 87, 255, 192, 0, 192, 255, 160, 255
 CBC, sisma_19, 0, 128, 192, 212, 160, 255, 0, 128, 128
 CBC, sisma_20, 192, 192, 0, 192, 0, 128, 78, 0, 255
 CBC, sisma_21, 0, 192, 128, 0, 128, 128, 255, 255, 87
 CBC, sisma_22, 78, 0, 255, 192, 128, 0, 192, 128, 0
 CBC, sisma_23, 255, 0, 128, 255, 128, 0, 0, 128, 57
 CBC, sisma_24, 192, 72, 0, 210, 210, 210, 163, 255, 160
 CBC, sisma_25, 192, 192, 0, 148, 87, 255, 0, 128, 255
 CBC, sisma_26, 146, 0, 255, 192, 0, 128, 0, 192, 128
 CBC, sisma_27, 163, 255, 160, 255, 255, 255, 78, 0, 255
 CBC, sisma_28, 148, 87, 255, 255, 255, 255, 85, 0, 192
 CBC, sisma_29, 255, 160, 255, 255, 192, 87, 85, 192, 0
 CBC, sisma_30, 192, 192, 192, 192, 192, 0, 192, 0, 192
 CBC, sisma_31, 85, 0, 192, 85, 0, 192, 255, 160, 255
 CBC, sisma_32, 78, 0, 255, 0, 128, 128, 128, 192, 0
 CBC, ENVELOPE, 163, 160, 255, 192, 192, 192, 160, 192, 255
 CBC, SLU, 163, 255, 160, 255, 255, 255, 192, 72, 0
 PO, GU2 +X, 160, 255, 255, 0, 192, 192, 255, 128, 0
 ST, G1+G2 copertura A, 163, 255, 160, 255, 255, 255, 255, 255, 87
 PO, GU2 -X, 192, 0, 128, 78, 0, 255, 255, 87, 128
 PO, GU2 +Y, 146, 0, 255, 85, 192, 0, 255, 192, 160
 ST, G1+G2 copertura B, 148, 87, 255, 192, 128, 0, 255, 255, 255
 PO, GU2 -Y, 255, 192, 160, 0, 128, 128, 255, 0, 192
 ST, muro, 146, 0, 255, 0, 128, 192, 255, 87, 128
 ST, Q sottotetto, 255, 192, 87, 255, 87, 87, 192, 0, 192
 ST, sporto gronda, 0, 192, 128, 146, 0, 255, 148, 87, 255
 ST, Q neve, 128, 192, 0, 255, 192, 87, 192, 72, 0
 ST, SISMA X, 255, 255, 87, 192, 128, 0, 192, 192, 0
 ST, SISMA Y, 255, 87, 87, 163, 255, 160, 0, 128, 57
 ST, travi, 160, 255, 255, 85, 192, 0, 160, 192, 255
```

**PROJECT TITLE :**

| | | | | |
|---|---|---|---|---|
| MIDAS | Company | | Client | |
| | Author | Nicola | File Name | US1B - scuola muscoline - VV - PO - 06.mgt |

```
*EIGEN-CTRL    ; Eigenvalue Analysis Control
; TYPE, iFREQ, iITER, iDIM, TOL, bMINMAX, FRMIN, FRMAX, bSTRUM   ; TYPE=EIGEN
; TYPE, bINCNL, iGNUM                                            ; TYPE=RITZ(line 1)
;       KIND1, CASE1/GROUND1, iNOG1, ...                         ; TYPE=RITZ(from line
2)
   LANCZOS, 96, 20, 1, 1e-010, NO, 0, 0, NO

*DGN-MATL    ; Modify Steel(Concrete) Material
; iMAT, TYPE, MNAME, [DATA1]                                    ; STEEL
; iMAT, TYPE, MNAME, [DATA2], [R-DATA], FCI, bSERV, SHORT, LONG ; CONC
; iMAT, TYPE, MNAME, [DATA3], [DATA2], [R-DATA]                 ; SRC
; iMAT, TYPE, MNAME, [DATA5]                                    ; STEEL(None) & KSCE-A
SD05
; [DATA1] : 1, DB, CODE, NAME or 2, ELAST, POISN, FU, FY1, FY2, FY3, FY4
;           FY5, FY6, AFT, AFT2, AFT3, FY, AFV, AFV2, AFV3
; [DATA2] : 1, DB, CODE, NAME or 2, FC, CHK, LAMBDA
; [DATA3] : 1, DB, CODE, NAME or 2, ELAST, FU, FY1, FY2, FY3, FY4
;              FY5, FY6, AFT, AFT2, AFT3, FY, AFV, AFV2, AFV3
; [DATA4] : 1, DB, CODE, NAME or 2, FC
; [DATA5] : 3, ELAST, POISN, AL1, AL2, AL3, AL4, AL5, AL6, AL7, AL8, AL9, AL10
;              MIN1, MIN2, MIN3
; [R-DATA]: RBCODE, RBMAIN, RBSUB, FY(R), FYS
    6, CONC , C16/20            , 1, EN04(RC)   ,            ,C16/20        , NO, 1, ,
 , , 0, 0, 11200, NO, 0, 0,            ,            ,              , 0, NO, 1, , , , 0
, 0, 0

*ENDDATA
```

**PROJECT TITLE :**

| | | | | |
|---|---|---|---|---|
| MIDAS | Company | | Client | |
| | Author | Nicola | File Name | US1B - scuola muscoline - VV - PO - 06.txt |

```
 ** midas Gen Pushover Curve Data **
_____________________________________________

[ Target Displacement ]
* Disp. Control Node : 180
* Direction : DX
* Load Pattern Type : Accerelation
* SLO- Demand, Capacity, Step, Remark : 0.014578, 0.010251, 55, N/A
* SLD- Demand, Capacity, Step, Remark : 0.014578, 0.015300, 55, OK
* SLV- Demand, Capacity, Step, Remark : 0.014578, -, 55, -
* SLC- Demand, Capacity, Step, Remark : 0.014578, -, 55, -
_____________________________________________

- Target Displacement of SLO
  m* = 183.179
  Gamma = 1
  Fy* = 211.129
  T* = 0.225787
  Se(T*) = 0.648g
  det* = 0.00820548
  qu = 5.51307
  Tc = 0.44
  dt* = 0.0145783 (short period range)
  dt = 0.0145783

- Target Displacement of SLD
  m* = 183.179
  Gamma = 1
  Fy* = 211.129
  T* = 0.225787
  Se(T*) = 0.648g
  det* = 0.00820548
  qu = 5.51307
  Tc = 0.44
  dt* = 0.0145783 (short period range)
  dt = 0.0145783

- Target Displacement of SLV
  m* = 183.179
  Gamma = 1
  Fy* = 211.129
  T* = 0.225787
  Se(T*) = 0.648g
  det* = 0.00820548
  qu = 5.51307
  Tc = 0.44
  dt* = 0.0145783 (short period range)
  dt = 0.0145783

- Target Displacement of SLC
  m* = 183.179
  Gamma = 1
  Fy* = 211.129
  T* = 0.225787
  Se(T*) = 0.648g
  det* = 0.00820548
  qu = 5.51307
  Tc = 0.44
  dt* = 0.0145783 (short period range)
  dt = 0.0145783
_____________________________________________

[ Spectral Displacement(Sd) vs. Spectral Acceleration(Sa) ]

Load Case :GU2 +X   Unit:  kN,m


 Node : 180   Direction : DX   Mode 2
```

**PROJECT TITLE :**

| | | | | |
|---|---|---|---|---|
| MIDAS | Company | | Client | |
| | Author | Nicola | File Name | US1B - scuola muscoline - VV - PO - 06.txt |

| Step<br>Status of Step | Spectral Displacement(Sd) | Spectral Acceleration(Sa) |
|---|---|---|
| 0 | 1.50000e-005 | 2.71930e-003 |
| 1 | 1.50000e-004 | 2.71930e-002 |
| 2 | 3.00000e-004 | 4.16035e-002 |
| 3 | 4.50000e-004 | 5.28024e-002 |
| 4 | 6.00000e-004 | 6.21306e-002 |
| 5 | 7.50000e-004 | 6.94737e-002 |
| 6 | 9.00000e-004 | 7.54520e-002 |
| 7 | 1.05000e-003 | 7.94503e-002 |
| 8 | 1.20000e-003 | 8.21746e-002 |
| 9 | 1.35000e-003 | 8.45619e-002 |
| 10 | 1.50000e-003 | 8.60050e-002 |
| 11 | 1.65000e-003 | 8.74480e-002 |
| 12 | 1.80000e-003 | 8.88910e-002 |
| 13 | 1.95000e-003 | 9.03340e-002 |
| 14 | 2.10000e-003 | 9.17770e-002 |
| 15 | 2.25000e-003 | 9.31923e-002 |
| 16 | 2.40000e-003 | 9.42916e-002 |
| 17 | 2.55000e-003 | 9.53908e-002 |
| 18 | 2.70000e-003 | 9.64901e-002 |
| 19 | 2.85000e-003 | 9.75893e-002 |
| 20 | 3.00000e-003 | 9.86885e-002 |
| 21 | 3.15000e-003 | 9.97877e-002 |
| 22 | 3.30000e-003 | 1.00810e-001 |
| 23 | 3.45000e-003 | 1.01754e-001 |
| 24 | 3.60000e-003 | 1.02699e-001 |
| 25 | 3.75000e-003 | 1.03643e-001 |
| 26 | 3.90000e-003 | 1.04588e-001 |
| 27 | 4.05000e-003 | 1.05532e-001 |
| 28 | 4.20000e-003 | 1.06476e-001 |
| 29 | 4.35000e-003 | 1.07421e-001 |
| 30 | 4.50000e-003 | 1.08365e-001 |
| 31 | 4.65000e-003 | 1.09309e-001 |

**PROJECT TITLE :**

| | Company | | Client | |
|---|---|---|---|---|
| MIDAS | Author | Nicola | File Name | US1B - scuola muscoline - VV - PO - 06.txt |

| | | | |
|---|---|---|---|
| 32 | 4.80000e-003 | 1.10254e-001 | |
| 33 | 4.95000e-003 | 1.11198e-001 | |
| 34 | 5.10000e-003 | 1.12143e-001 | |
| 35 | 5.25000e-003 | 1.13087e-001 | |
| 36 | 5.40000e-003 | 1.14009e-001 | |
| 37 | 5.55000e-003 | 1.14807e-001 | |
| 38 | 5.70000e-003 | 1.15606e-001 | |
| 39 | 5.85000e-003 | 1.16404e-001 | |
| 40 | 6.00000e-003 | 1.17157e-001 | |
| 41 | 6.15000e-003 | 1.17876e-001 | |
| 42 | 6.30000e-003 | 1.18565e-001 | |
| 43 | 6.45000e-003 | 1.19253e-001 | |
| 44 | 6.60000e-003 | 1.19839e-001 | |
| 45 | 6.75000e-003 | 1.20413e-001 | |
| 46 | 6.90000e-003 | 1.20986e-001 | |
| 47 | 7.05000e-003 | 1.21560e-001 | |
| 48 | 7.20000e-003 | 1.22133e-001 | |
| 49 | 7.35000e-003 | 1.22707e-001 | |
| 50 | 7.50000e-003 | 1.23280e-001 | |
| 51 | 7.65000e-003 | 1.23854e-001 | |
| 52 | 7.80000e-003 | 1.24427e-001 | |
| 53 | 7.95000e-003 | 1.24957e-001 | |
| 54 | 8.10000e-003 | 1.25267e-001 | |
| 55 | 8.25000e-003 | 1.25577e-001 | SLO(Dem.)SLD(Dem.)SLV(Dem.)SLC(Dem.) |
| 56 | 8.40000e-003 | 1.25888e-001 | |
| 57 | 8.55000e-003 | 1.26198e-001 | |
| 58 | 8.70000e-003 | 1.26508e-001 | |
| 59 | 8.85000e-003 | 1.26748e-001 | |
| 60 | 9.00000e-003 | 1.26818e-001 | |
| 61 | 9.15000e-003 | 1.26885e-001 | |
| 62 | 9.30000e-003 | 1.26948e-001 | |
| 63 | 9.45000e-003 | 1.27011e-001 | |
| 64 | 9.60000e-003 | 1.27074e-001 | |
| 65 | 9.75000e-003 | 1.27137e-001 | |
| 66 | 9.90000e-003 | 1.27200e-001 | |

**PROJECT TITLE :**

| | | | | |
|---|---|---|---|---|
| MIDAS | Company | | Client | |
| | Author | Nicola | File Name | US1B - scuola muscoline - VV - PO - 06.txt |

| | | |
|---|---|---|
| 67 | 1.00500e-002 | 1.27263e-001 |
| 68 | 1.02000e-002 | 1.27326e-001 |
| 69 | 1.03500e-002 | 1.27390e-001 |
| 70 | 1.05000e-002 | 1.27453e-001 |
| 71 | 1.06500e-002 | 1.27516e-001 |
| 72 | 1.08000e-002 | 1.27579e-001 |
| 73 | 1.09500e-002 | 1.27642e-001 |
| 74 | 1.11000e-002 | 1.27705e-001 |
| 75 | 1.12500e-002 | 1.27768e-001 |
| 76 | 1.14000e-002 | 1.27831e-001 |
| 77 | 1.15500e-002 | 1.27894e-001 |
| 78 | 1.17000e-002 | 1.27957e-001 |
| 79 | 1.18500e-002 | 1.28020e-001 |
| 80 | 1.20000e-002 | 1.28083e-001 |
| 81 | 1.21500e-002 | 1.28146e-001 |
| 82 | 1.23000e-002 | 1.28209e-001 |
| 83 | 1.24500e-002 | 1.28272e-001 |
| 84 | 1.26000e-002 | 1.28336e-001 |
| 85 | 1.27500e-002 | 1.28399e-001 |
| 86 | 1.29000e-002 | 1.28462e-001 |
| 87 | 1.30500e-002 | 1.28525e-001 |
| 88 | 1.32000e-002 | 1.28588e-001 |
| 89 | 1.33500e-002 | 1.28651e-001 |
| 90 | 1.35000e-002 | 1.28714e-001 |
| 91 | 1.36500e-002 | 1.28777e-001 |
| 92 | 1.38000e-002 | 1.28840e-001 |
| 93 | 1.39500e-002 | 1.28903e-001 |
| 94 | 1.41000e-002 | 1.28966e-001 |
| 95 | 1.42500e-002 | 1.29029e-001 |
| 96 | 1.44000e-002 | 1.29092e-001 |
| 97 | 1.45500e-002 | 1.29155e-001 |
| 98 | 1.47000e-002 | 1.29218e-001 |
| 99 | 1.48500e-002 | 1.29282e-001 |
| 100 | 1.50000e-002 | 1.29345e-001 |

**PROJECT TITLE :**

| | Company | | Client | |
|---|---|---|---|---|
| MIDAS | Author | Nicola | File Name | US1B - scuola muscoline - VV - PO - 06.txt |

| | | |
|---|---|---|
| 101 | 1.51500e-002 | 1.29408e-001 |
| 102 | 1.53000e-002 | 1.29471e-001 |
| SLD(Cap.) 103 | 1.54500e-002 | 1.20610e-001 |
| 104 | 1.56000e-002 | 1.20673e-001 |
| 105 | 1.57500e-002 | 1.20736e-001 |
| 106 | 1.59000e-002 | 1.20799e-001 |
| 107 | 1.60500e-002 | 1.20862e-001 |
| 108 | 1.62000e-002 | 1.20925e-001 |
| 109 | 1.63500e-002 | 1.20988e-001 |
| 110 | 1.65000e-002 | 1.11959e-001 |
| 111 | 1.66500e-002 | 1.12022e-001 |
| 112 | 1.68000e-002 | 1.12085e-001 |
| 113 | 1.69500e-002 | 1.12147e-001 |
| 114 | 1.71000e-002 | 1.12210e-001 |
| 115 | 1.72500e-002 | 1.12273e-001 |
| 116 | 1.74000e-002 | 1.12336e-001 |
| 117 | 1.75500e-002 | 1.12399e-001 |
| 118 | 1.77000e-002 | 1.12462e-001 |
| 119 | 1.78500e-002 | 1.12525e-001 |
| 120 | 1.80000e-002 | 1.12587e-001 |
| 121 | 1.81500e-002 | 1.12650e-001 |
| 122 | 1.83000e-002 | 1.12713e-001 |
| 123 | 1.84500e-002 | 1.12776e-001 |
| 124 | 1.86000e-002 | 1.12839e-001 |
| 125 | 1.87500e-002 | 1.12902e-001 |
| 126 | 1.89000e-002 | 1.12965e-001 |
| 127 | 1.90500e-002 | 1.13027e-001 |
| 128 | 1.92000e-002 | 1.13090e-001 |
| 129 | 1.93500e-002 | 1.13153e-001 |
| 130 | 1.95000e-002 | 1.13216e-001 |
| 131 | 1.96500e-002 | 1.13279e-001 |
| 132 | 1.98000e-002 | 1.13318e-001 |
| 133 | 1.99500e-002 | 1.13358e-001 |
| 134 | 2.01000e-002 | 1.13397e-001 |
| 135 | 2.02500e-002 | 1.13437e-001 |

| | | |
|---|---|---|
| 136 | 2.04000e-002 | 1.13476e-001 |
| 137 | 2.05500e-002 | 1.13516e-001 |
| 138 | 2.07000e-002 | 1.13555e-001 |
| 139 | 2.08500e-002 | 1.13595e-001 |
| 140 | 2.10000e-002 | 1.13634e-001 |
| 141 | 2.11500e-002 | 1.13674e-001 |
| 142 | 2.13000e-002 | 1.13713e-001 |
| 143 | 2.14500e-002 | 1.13753e-001 |
| 144 | 2.16000e-002 | 1.13792e-001 |
| 145 | 2.17500e-002 | 1.13832e-001 |
| 146 | 2.19000e-002 | 1.13872e-001 |
| 147 | 2.20500e-002 | 1.13911e-001 |
| 148 | 2.22000e-002 | 1.09873e-001 |
| 149 | 2.23500e-002 | 1.09911e-001 |
| 150 | 2.25000e-002 | 1.09945e-001 |
| 151 | 2.26500e-002 | 1.09980e-001 |
| 152 | 2.28000e-002 | 1.10014e-001 |
| 153 | 2.29500e-002 | 1.10048e-001 |
| 154 | 2.31000e-002 | 1.10082e-001 |
| 155 | 2.32500e-002 | 1.10116e-001 |
| 156 | 2.34000e-002 | 1.10150e-001 |
| 157 | 2.35500e-002 | 1.10184e-001 |
| 158 | 2.37000e-002 | 1.10219e-001 |
| 159 | 2.38500e-002 | 1.01912e-001 |
| 160 | 2.40000e-002 | 1.03470e-001 |
| 161 | 2.41500e-002 | 1.03511e-001 |
| 162 | 2.43000e-002 | 1.03551e-001 |
| 163 | 2.44500e-002 | 1.03591e-001 |
| 164 | 2.46000e-002 | 1.03632e-001 |
| 165 | 2.47500e-002 | 1.03672e-001 |
| 166 | 2.49000e-002 | 1.03712e-001 |
| 167 | 2.50500e-002 | 1.01690e-001 |
| 168 | 2.52000e-002 | 1.01759e-001 |
| 169 | 2.53500e-002 | 1.01828e-001 |

| | | |
|---|---|---|
| 170 | 2.55000e-002 | 1.01896e-001 |
| 171 | 2.56500e-002 | 9.39452e-002 |
| 172 | 2.58000e-002 | 9.40162e-002 |
| 173 | 2.59500e-002 | 9.40851e-002 |
| 174 | 2.61000e-002 | 8.59102e-002 |
| 175 | 2.62500e-002 | 7.44268e-002 |
| 176 | 2.64000e-002 | 7.44970e-002 |
| 177 | 2.65500e-002 | 7.45374e-002 |
| 178 | 2.67000e-002 | 7.45779e-002 |
| 179 | 2.68500e-002 | 7.46184e-002 |
| 180 | 2.70000e-002 | 7.46588e-002 |
| 181 | 2.71500e-002 | 7.46993e-002 |
| 182 | 2.73000e-002 | 7.47398e-002 |
| 183 | 2.74500e-002 | 7.47803e-002 |
| 184 | 2.76000e-002 | 7.48207e-002 |
| 185 | 2.77500e-002 | 7.48612e-002 |
| 186 | 2.79000e-002 | 7.49017e-002 |
| 187 | 2.80500e-002 | 7.49421e-002 |
| 188 | 2.82000e-002 | 7.49826e-002 |
| 189 | 2.83500e-002 | 7.50231e-002 |
| 190 | 2.85000e-002 | 7.50635e-002 |
| 191 | 2.86500e-002 | 7.51040e-002 |
| 192 | 2.88000e-002 | 7.51445e-002 |
| 193 | 2.89500e-002 | 7.51849e-002 |
| 194 | 2.91000e-002 | 7.52254e-002 |
| 195 | 2.92500e-002 | 7.52659e-002 |
| 196 | 2.94000e-002 | 7.53064e-002 |
| 197 | 2.95500e-002 | 7.53468e-002 |
| 198 | 2.97000e-002 | 7.53873e-002 |
| 199 | 2.98500e-002 | 7.54278e-002 |
| 200 | 3.00000e-002 | 7.54682e-002 |

| | | |
|---|---|---|
| Min : | 1.50000e-005 | 2.71930e-003 |
| Max : | 1.53000e-002 | 1.29471e-001 |

**PROJECT TITLE :**

| | Company | | Client | |
|---|---|---|---|---|
| MIDAS | Author | Nicola | File Name | US1B - scuola muscoline - VV - PO - 06.txt |

```
 ** midas Gen Pushover Curve Data **
_____________________________________________

[ Target Displacement ]
* Disp. Control Node : 180
* Direction : DX
* Load Pattern Type : Accerelation
* SLO- Demand, Capacity, Step, Remark : 0.013417, 0.009145, 47, N/A
* SLD- Demand, Capacity, Step, Remark : 0.013417, 0.013650, 47, OK
* SLV- Demand, Capacity, Step, Remark : 0.013417, -, 47, -
* SLC- Demand, Capacity, Step, Remark : 0.013417, -, 47, -
_____________________________________________

- Target Displacement of SLO
  m* = 183.179
  Gamma = 1
  Fy* = 210.105
  T* = 0.20926
  Se(T*) = 0.648g
  det* = 0.00704821
  qu = 5.53995
  Tc = 0.44
  dt* = 0.0134171 (short period range)
  dt = 0.0134171

- Target Displacement of SLD
  m* = 183.179
  Gamma = 1
  Fy* = 210.105
  T* = 0.20926
  Se(T*) = 0.648g
  det* = 0.00704821
  qu = 5.53995
  Tc = 0.44
  dt* = 0.0134171 (short period range)
  dt = 0.0134171

- Target Displacement of SLV
  m* = 183.179
  Gamma = 1
  Fy* = 210.105
  T* = 0.20926
  Se(T*) = 0.648g
  det* = 0.00704821
  qu = 5.53995
  Tc = 0.44
  dt* = 0.0134171 (short period range)
  dt = 0.0134171

- Target Displacement of SLC
  m* = 183.179
  Gamma = 1
  Fy* = 210.105
  T* = 0.20926
  Se(T*) = 0.648g
  det* = 0.00704821
  qu = 5.53995
  Tc = 0.44
  dt* = 0.0134171 (short period range)
  dt = 0.0134171
_____________________________________________

[ Spectral Displacement(Sd) vs. Spectral Acceleration(Sa) ]

Load Case :GU2 -X   Unit:  kN,m


 Node : 180   Direction : DX   Mode 2
```

**PROJECT TITLE :**

| | | | | |
|---|---|---|---|---|
| MIDAS | Company | | Client | |
| | Author | Nicola | File Name | US1B - scuola muscoline - VV - PO - 06.txt |

| Step<br>Status of Step | Spectral Displacement(Sd) | Spectral Acceleration(Sa) |
|---|---|---|
| 0 | 1.50000e-005 | 2.94689e-003 |
| 1 | 1.50000e-004 | 2.94689e-002 |
| 2 | 3.00000e-004 | 4.56033e-002 |
| 3 | 4.50000e-004 | 5.67248e-002 |
| 4 | 6.00000e-004 | 6.56391e-002 |
| 5 | 7.50000e-004 | 7.25611e-002 |
| 6 | 9.00000e-004 | 7.94831e-002 |
| 7 | 1.05000e-003 | 8.36770e-002 |
| 8 | 1.20000e-003 | 8.57694e-002 |
| 9 | 1.35000e-003 | 8.73246e-002 |
| 10 | 1.50000e-003 | 8.86513e-002 |
| 11 | 1.65000e-003 | 8.98190e-002 |
| 12 | 1.80000e-003 | 9.09866e-002 |
| 13 | 1.95000e-003 | 9.21542e-002 |
| 14 | 2.10000e-003 | 9.33217e-002 |
| 15 | 2.25000e-003 | 9.44893e-002 |
| 16 | 2.40000e-003 | 9.56569e-002 |
| 17 | 2.55000e-003 | 9.67902e-002 |
| 18 | 2.70000e-003 | 9.77518e-002 |
| 19 | 2.85000e-003 | 9.87135e-002 |
| 20 | 3.00000e-003 | 9.96752e-002 |
| 21 | 3.15000e-003 | 1.00637e-001 |
| 22 | 3.30000e-003 | 1.01599e-001 |
| 23 | 3.45000e-003 | 1.02560e-001 |
| 24 | 3.60000e-003 | 1.03514e-001 |
| 25 | 3.75000e-003 | 1.04360e-001 |
| 26 | 3.90000e-003 | 1.05205e-001 |
| 27 | 4.05000e-003 | 1.06050e-001 |
| 28 | 4.20000e-003 | 1.06895e-001 |
| 29 | 4.35000e-003 | 1.07740e-001 |
| 30 | 4.50000e-003 | 1.08563e-001 |
| 31 | 4.65000e-003 | 1.09359e-001 |

| | | | |
|---|---|---|---|
| 32 | 4.80000e-003 | 1.10154e-001 | |
| 33 | 4.95000e-003 | 1.10949e-001 | |
| 34 | 5.10000e-003 | 1.11728e-001 | |
| 35 | 5.25000e-003 | 1.12495e-001 | |
| 36 | 5.40000e-003 | 1.13262e-001 | |
| 37 | 5.55000e-003 | 1.14029e-001 | |
| 38 | 5.70000e-003 | 1.14796e-001 | |
| 39 | 5.85000e-003 | 1.15472e-001 | |
| 40 | 6.00000e-003 | 1.16106e-001 | |
| 41 | 6.15000e-003 | 1.16726e-001 | |
| 42 | 6.30000e-003 | 1.17346e-001 | |
| 43 | 6.45000e-003 | 1.17965e-001 | |
| 44 | 6.60000e-003 | 1.18585e-001 | |
| 45 | 6.75000e-003 | 1.19186e-001 | |
| 46 | 6.90000e-003 | 1.19766e-001 | |
| 47 | 7.05000e-003 | 1.20346e-001 | SLO(Dem.)SLD(Dem.)SLV(Dem.)SLC(Dem.) |
| 48 | 7.20000e-003 | 1.20927e-001 | |
| 49 | 7.35000e-003 | 1.21507e-001 | |
| 50 | 7.50000e-003 | 1.22087e-001 | |
| 51 | 7.65000e-003 | 1.22667e-001 | |
| 52 | 7.80000e-003 | 1.23247e-001 | |
| 53 | 7.95000e-003 | 1.23827e-001 | |
| 54 | 8.10000e-003 | 1.24190e-001 | |
| 55 | 8.25000e-003 | 1.24507e-001 | |
| 56 | 8.40000e-003 | 1.24824e-001 | |
| 57 | 8.55000e-003 | 1.25141e-001 | |
| 58 | 8.70000e-003 | 1.25458e-001 | |
| 59 | 8.85000e-003 | 1.25775e-001 | |
| 60 | 9.00000e-003 | 1.25899e-001 | |
| 61 | 9.15000e-003 | 1.25935e-001 | |
| 62 | 9.30000e-003 | 1.25971e-001 | |
| 63 | 9.45000e-003 | 1.26006e-001 | |
| 64 | 9.60000e-003 | 1.26042e-001 | |
| 65 | 9.75000e-003 | 1.26077e-001 | |
| 66 | 9.90000e-003 | 1.26112e-001 | |

**PROJECT TITLE :**

| | Company | | Client | |
|---|---|---|---|---|
| MIDAS | Author | Nicola | File Name | US1B - scuola muscoline - VV - PO - 06.txt |

| | | | |
|---|---|---|---|
| | 67 | 1.00500e-002 | 1.26148e-001 |
| | 68 | 1.02000e-002 | 1.26183e-001 |
| | 69 | 1.03500e-002 | 1.26218e-001 |
| | 70 | 1.05000e-002 | 1.26254e-001 |
| | 71 | 1.06500e-002 | 1.26289e-001 |
| | 72 | 1.08000e-002 | 1.26324e-001 |
| | 73 | 1.09500e-002 | 1.26359e-001 |
| | 74 | 1.11000e-002 | 1.26395e-001 |
| | 75 | 1.12500e-002 | 1.26430e-001 |
| | 76 | 1.14000e-002 | 1.26465e-001 |
| | 77 | 1.15500e-002 | 1.26500e-001 |
| | 78 | 1.17000e-002 | 1.26536e-001 |
| | 79 | 1.18500e-002 | 1.26571e-001 |
| | 80 | 1.20000e-002 | 1.26606e-001 |
| | 81 | 1.21500e-002 | 1.26641e-001 |
| | 82 | 1.23000e-002 | 1.26677e-001 |
| | 83 | 1.24500e-002 | 1.26712e-001 |
| | 84 | 1.26000e-002 | 1.26747e-001 |
| | 85 | 1.27500e-002 | 1.26782e-001 |
| | 86 | 1.29000e-002 | 1.26818e-001 |
| | 87 | 1.30500e-002 | 1.26853e-001 |
| | 88 | 1.32000e-002 | 1.26888e-001 |
| | 89 | 1.33500e-002 | 1.26924e-001 |
| | 90 | 1.35000e-002 | 1.26959e-001 |
| | 91 | 1.36500e-002 | 1.26994e-001 |
| SLD(Cap.) | 92 | 1.38000e-002 | 1.22598e-001 |
| | 93 | 1.39500e-002 | 1.22670e-001 |
| | 94 | 1.41000e-002 | 1.22742e-001 |
| | 95 | 1.42500e-002 | 1.22815e-001 |
| | 96 | 1.44000e-002 | 1.22874e-001 |
| | 97 | 1.45500e-002 | 1.22920e-001 |
| | 98 | 1.47000e-002 | 1.22965e-001 |
| | 99 | 1.48500e-002 | 1.23011e-001 |
| | 100 | 1.50000e-002 | 1.14977e-001 |

**PROJECT TITLE :**

| | | | | |
|---|---|---|---|---|
| MIDAS | Company | | Client | |
| | Author | Nicola | File Name | US1B - scuola muscoline - VV - PO - 06.txt |

| | | |
|---|---|---|
| 101 | 1.51500e-002 | 1.15022e-001 |
| 102 | 1.53000e-002 | 1.15068e-001 |
| 103 | 1.54500e-002 | 1.15113e-001 |
| 104 | 1.56000e-002 | 1.15159e-001 |
| 105 | 1.57500e-002 | 1.15204e-001 |
| 106 | 1.59000e-002 | 1.15250e-001 |
| 107 | 1.60500e-002 | 1.15295e-001 |
| 108 | 1.62000e-002 | 1.15341e-001 |
| 109 | 1.63500e-002 | 1.07335e-001 |
| 110 | 1.65000e-002 | 1.07380e-001 |
| 111 | 1.66500e-002 | 1.07425e-001 |
| 112 | 1.68000e-002 | 1.07471e-001 |
| 113 | 1.69500e-002 | 1.07516e-001 |
| 114 | 1.71000e-002 | 1.07562e-001 |
| 115 | 1.72500e-002 | 1.07607e-001 |
| 116 | 1.74000e-002 | 1.07652e-001 |
| 117 | 1.75500e-002 | 1.07698e-001 |
| 118 | 1.77000e-002 | 1.07743e-001 |
| 119 | 1.78500e-002 | 1.07789e-001 |
| 120 | 1.80000e-002 | 1.07834e-001 |
| 121 | 1.81500e-002 | 1.07879e-001 |
| 122 | 1.83000e-002 | 1.07925e-001 |
| 123 | 1.84500e-002 | 1.07970e-001 |
| 124 | 1.86000e-002 | 1.08013e-001 |
| 125 | 1.87500e-002 | 1.08051e-001 |
| 126 | 1.89000e-002 | 1.08088e-001 |
| 127 | 1.90500e-002 | 1.08126e-001 |
| 128 | 1.92000e-002 | 1.08164e-001 |
| 129 | 1.93500e-002 | 1.08201e-001 |
| 130 | 1.95000e-002 | 1.08239e-001 |
| 131 | 1.96500e-002 | 1.08277e-001 |
| 132 | 1.98000e-002 | 1.08315e-001 |
| 133 | 1.99500e-002 | 1.08352e-001 |
| 134 | 2.01000e-002 | 1.08390e-001 |
| 135 | 2.02500e-002 | 1.08428e-001 |

| | | |
|---|---|---|
| 136 | 2.04000e-002 | 1.08465e-001 |
| 137 | 2.05500e-002 | 1.08503e-001 |
| 138 | 2.07000e-002 | 1.08541e-001 |
| 139 | 2.08500e-002 | 1.08578e-001 |
| 140 | 2.10000e-002 | 1.08616e-001 |
| 141 | 2.11500e-002 | 1.08654e-001 |
| 142 | 2.13000e-002 | 1.08691e-001 |
| 143 | 2.14500e-002 | 1.08729e-001 |
| 144 | 2.16000e-002 | 1.08767e-001 |
| 145 | 2.17500e-002 | 1.08805e-001 |
| 146 | 2.19000e-002 | 1.08842e-001 |
| 147 | 2.20500e-002 | 1.08880e-001 |
| 148 | 2.22000e-002 | 1.08918e-001 |
| 149 | 2.23500e-002 | 1.08955e-001 |
| 150 | 2.25000e-002 | 1.06608e-001 |
| 151 | 2.26500e-002 | 1.06662e-001 |
| 152 | 2.28000e-002 | 1.06716e-001 |
| 153 | 2.29500e-002 | 1.06770e-001 |
| 154 | 2.31000e-002 | 1.06824e-001 |
| 155 | 2.32500e-002 | 1.06877e-001 |
| 156 | 2.34000e-002 | 1.06931e-001 |
| 157 | 2.35500e-002 | 1.00546e-001 |
| 158 | 2.37000e-002 | 1.00613e-001 |
| 159 | 2.38500e-002 | 1.00680e-001 |
| 160 | 2.40000e-002 | 1.00747e-001 |
| 161 | 2.41500e-002 | 1.00813e-001 |
| 162 | 2.43000e-002 | 1.00880e-001 |
| 163 | 2.44500e-002 | 1.00947e-001 |
| 164 | 2.46000e-002 | 1.01014e-001 |
| 165 | 2.47500e-002 | 1.01081e-001 |
| 166 | 2.49000e-002 | 1.01148e-001 |
| 167 | 2.50500e-002 | 1.01215e-001 |
| 168 | 2.52000e-002 | 1.01282e-001 |
| 169 | 2.53500e-002 | 1.01349e-001 |

| | | |
|---|---|---|
| 170 | 2.55000e-002 | 1.01416e-001 |
| 171 | 2.56500e-002 | 9.93485e-002 |
| 172 | 2.58000e-002 | 9.32322e-002 |
| 173 | 2.59500e-002 | 9.26413e-002 |
| 174 | 2.61000e-002 | 8.26524e-002 |
| 175 | 2.62500e-002 | 8.27074e-002 |
| 176 | 2.64000e-002 | 7.13166e-002 |
| 177 | 2.65500e-002 | 7.13714e-002 |
| 178 | 2.67000e-002 | 7.14263e-002 |
| 179 | 2.68500e-002 | 7.14811e-002 |
| 180 | 2.70000e-002 | 7.15359e-002 |
| 181 | 2.71500e-002 | 7.15908e-002 |
| 182 | 2.73000e-002 | 7.16456e-002 |
| 183 | 2.74500e-002 | 7.17005e-002 |
| 184 | 2.76000e-002 | 7.17553e-002 |
| 185 | 2.77500e-002 | 7.18101e-002 |
| 186 | 2.79000e-002 | 7.18550e-002 |
| 187 | 2.80500e-002 | 7.18964e-002 |
| 188 | 2.82000e-002 | 7.19378e-002 |
| 189 | 2.83500e-002 | 7.19793e-002 |
| 190 | 2.85000e-002 | 7.20207e-002 |
| 191 | 2.86500e-002 | 7.20622e-002 |
| 192 | 2.88000e-002 | 7.21036e-002 |
| 193 | 2.89500e-002 | 7.03384e-002 |
| 194 | 2.91000e-002 | 7.03862e-002 |
| 195 | 2.92500e-002 | 7.04289e-002 |
| 196 | 2.94000e-002 | 7.04715e-002 |
| 197 | 2.95500e-002 | 7.05142e-002 |
| 198 | 2.97000e-002 | 6.46171e-002 |
| 199 | 2.98500e-002 | 6.46626e-002 |
| 200 | 3.00000e-002 | 6.47052e-002 |

| | | |
|---|---|---|
| Min : | 1.50000e-005 | 2.94689e-003 |
| Max : | 1.36500e-002 | 1.26994e-001 |

**PROJECT TITLE :**

| | Company | | Client | |
|---|---|---|---|---|
| MIDAS | Author | Nicola | File Name | US1B - scuola muscoline - VV - PO - 06.txt |

```
 ** midas Gen Pushover Curve Data **
_____________________________________________

[ Target Displacement ]
* Disp. Control Node : 180
* Direction : DY
* Load Pattern Type : Accerelation
* SLO- Demand, Capacity, Step, Remark : 0.010191, 0.005126, 34, N/A
* SLD- Demand, Capacity, Step, Remark : 0.010191, 0.007650, 34, N/A
* SLV- Demand, Capacity, Step, Remark : 0.010191, -, 34, -
* SLC- Demand, Capacity, Step, Remark : 0.010191, -, 34, -
_____________________________________________

- Target Displacement of SLO
  m* = 183.179
  Gamma = 1
  Fy* = 371.647
  T* = 0.177727
  Se(T*) = 0.648g
  det* = 0.0050841
  qu = 3.13192
  Tc = 0.44
  dt* = 0.0101912 (short period range)
  dt = 0.0101912

- Target Displacement of SLD
  m* = 183.179
  Gamma = 1
  Fy* = 371.647
  T* = 0.177727
  Se(T*) = 0.648g
  det* = 0.0050841
  qu = 3.13192
  Tc = 0.44
  dt* = 0.0101912 (short period range)
  dt = 0.0101912

- Target Displacement of SLV
  m* = 183.179
  Gamma = 1
  Fy* = 371.647
  T* = 0.177727
  Se(T*) = 0.648g
  det* = 0.0050841
  qu = 3.13192
  Tc = 0.44
  dt* = 0.0101912 (short period range)
  dt = 0.0101912

- Target Displacement of SLC
  m* = 183.179
  Gamma = 1
  Fy* = 371.647
  T* = 0.177727
  Se(T*) = 0.648g
  det* = 0.0050841
  qu = 3.13192
  Tc = 0.44
  dt* = 0.0101912 (short period range)
  dt = 0.0101912
_____________________________________________

[ Spectral Displacement(Sd) vs. Spectral Acceleration(Sa) ]

Load Case :GU2 +Y   Unit:  kN,m


 Node : 180   Direction : DY   Mode 1
```

**PROJECT TITLE :**

| | | | | |
|---|---|---|---|---|
| MIDAS | Company | | Client | |
| | Author | Nicola | File Name | US1B - scuola muscoline - VV - PO - 06.txt |

| Step Status of Step | Spectral Displacement(Sd) | Spectral Acceleration(Sa) |
|---|---|---|
| 0 | 1.50000e-005 | 2.07204e-003 |
| 1 | 1.50000e-004 | 2.07204e-002 |
| 2 | 3.00000e-004 | 4.14299e-002 |
| 3 | 4.50000e-004 | 6.21395e-002 |
| 4 | 6.00000e-004 | 8.22133e-002 |
| 5 | 7.50000e-004 | 1.01947e-001 |
| 6 | 9.00000e-004 | 1.20805e-001 |
| 7 | 1.05000e-003 | 1.32817e-001 |
| 8 | 1.20000e-003 | 1.44045e-001 |
| 9 | 1.35000e-003 | 1.53418e-001 |
| 10 | 1.50000e-003 | 1.61312e-001 |
| 11 | 1.65000e-003 | 1.68568e-001 |
| 12 | 1.80000e-003 | 1.74891e-001 |
| 13 | 1.95000e-003 | 1.80416e-001 |
| 14 | 2.10000e-003 | 1.85940e-001 |
| 15 | 2.25000e-003 | 1.90667e-001 |
| 16 | 2.40000e-003 | 1.94909e-001 |
| 17 | 2.55000e-003 | 1.98530e-001 |
| 18 | 2.70000e-003 | 2.00664e-001 |
| 19 | 2.85000e-003 | 2.02029e-001 |
| 20 | 3.00000e-003 | 2.03393e-001 |
| 21 | 3.15000e-003 | 2.04269e-001 |
| 22 | 3.30000e-003 | 2.05069e-001 |
| 23 | 3.45000e-003 | 2.05869e-001 |
| 24 | 3.60000e-003 | 2.06669e-001 |
| 25 | 3.75000e-003 | 2.07469e-001 |
| 26 | 3.90000e-003 | 2.08269e-001 |
| 27 | 4.05000e-003 | 2.09068e-001 |
| 28 | 4.20000e-003 | 2.09868e-001 |
| 29 | 4.35000e-003 | 2.10668e-001 |
| 30 | 4.50000e-003 | 2.11392e-001 |
| 31 | 4.65000e-003 | 2.11872e-001 |

**PROJECT TITLE :**

| | Company | | Client | |
|---|---|---|---|---|
| MIDAS | Author | Nicola | File Name | US1B - scuola muscoline - VV - PO - 06.txt |

| | | | |
|---|---|---|---|
| 32 | 4.80000e-003 | 2.12299e-001 | |
| 33 | 4.95000e-003 | 2.12705e-001 | |
| 34 | 5.10000e-003 | 2.13074e-001 | SLO(Dem.)SLD(Dem.)SLV(Dem.)SLC(Dem.) |
| 35 | 5.25000e-003 | 2.13433e-001 | |
| 36 | 5.40000e-003 | 2.13791e-001 | |
| 37 | 5.55000e-003 | 2.14149e-001 | |
| 38 | 5.70000e-003 | 2.14507e-001 | |
| 39 | 5.85000e-003 | 2.14866e-001 | |
| 40 | 6.00000e-003 | 2.15224e-001 | |
| 41 | 6.15000e-003 | 2.15582e-001 | |
| 42 | 6.30000e-003 | 2.15916e-001 | |
| 43 | 6.45000e-003 | 2.16247e-001 | |
| 44 | 6.60000e-003 | 2.16578e-001 | |
| 45 | 6.75000e-003 | 2.16909e-001 | |
| 46 | 6.90000e-003 | 2.17240e-001 | |
| 47 | 7.05000e-003 | 2.17571e-001 | |
| 48 | 7.20000e-003 | 2.17830e-001 | |
| 49 | 7.35000e-003 | 2.18057e-001 | |
| 50 | 7.50000e-003 | 2.18284e-001 | |
| 51 | 7.65000e-003 | 2.18512e-001 | SLD(Cap.) |
| 52 | 7.80000e-003 | 2.09214e-001 | |
| 53 | 7.95000e-003 | 2.09542e-001 | |
| 54 | 8.10000e-003 | 2.09865e-001 | |
| 55 | 8.25000e-003 | 2.10104e-001 | |
| 56 | 8.40000e-003 | 2.10205e-001 | |
| 57 | 8.55000e-003 | 2.10307e-001 | |
| 58 | 8.70000e-003 | 2.10408e-001 | |
| 59 | 8.85000e-003 | 2.10510e-001 | |
| 60 | 9.00000e-003 | 2.10611e-001 | |
| 61 | 9.15000e-003 | 2.10713e-001 | |
| 62 | 9.30000e-003 | 2.10814e-001 | |
| 63 | 9.45000e-003 | 2.10916e-001 | |
| 64 | 9.60000e-003 | 2.11017e-001 | |
| 65 | 9.75000e-003 | 2.11119e-001 | |
| 66 | 9.90000e-003 | 2.11220e-001 | |

**PROJECT TITLE :**

| | | | | |
|---|---|---|---|---|
| MIDAS | Company | | Client | |
| | Author | Nicola | File Name | US1B - scuola muscoline - VV - PO - 06.txt |

| | | |
|---|---|---|
| 67 | 1.00500e-002 | 2.11322e-001 |
| 68 | 1.02000e-002 | 2.11423e-001 |
| 69 | 1.03500e-002 | 2.11525e-001 |
| 70 | 1.05000e-002 | 2.11626e-001 |
| 71 | 1.06500e-002 | 2.11728e-001 |
| 72 | 1.08000e-002 | 2.11829e-001 |
| 73 | 1.09500e-002 | 2.11931e-001 |
| 74 | 1.11000e-002 | 2.12032e-001 |
| 75 | 1.12500e-002 | 2.12134e-001 |
| 76 | 1.14000e-002 | 2.12235e-001 |
| 77 | 1.15500e-002 | 2.12337e-001 |
| 78 | 1.17000e-002 | 2.04137e-001 |
| 79 | 1.18500e-002 | 2.04371e-001 |
| 80 | 1.20000e-002 | 2.04605e-001 |
| 81 | 1.21500e-002 | 2.04839e-001 |
| 82 | 1.23000e-002 | 2.05064e-001 |
| 83 | 1.24500e-002 | 2.05230e-001 |
| 84 | 1.26000e-002 | 2.05389e-001 |
| 85 | 1.27500e-002 | 2.05490e-001 |
| 86 | 1.29000e-002 | 2.05591e-001 |
| 87 | 1.30500e-002 | 2.05693e-001 |
| 88 | 1.32000e-002 | 2.05794e-001 |
| 89 | 1.33500e-002 | 2.05860e-001 |
| 90 | 1.35000e-002 | 2.05884e-001 |
| 91 | 1.36500e-002 | 2.05907e-001 |
| 92 | 1.38000e-002 | 2.05931e-001 |
| 93 | 1.39500e-002 | 2.05955e-001 |
| 94 | 1.41000e-002 | 2.05978e-001 |
| 95 | 1.42500e-002 | 2.06002e-001 |
| 96 | 1.44000e-002 | 2.06026e-001 |
| 97 | 1.45500e-002 | 2.06049e-001 |
| 98 | 1.47000e-002 | 2.06073e-001 |
| 99 | 1.48500e-002 | 2.06097e-001 |
| 100 | 1.50000e-002 | 2.06121e-001 |

**PROJECT TITLE :**

| | Company | | Client | |
|---|---|---|---|---|
| MIDAS | Author | Nicola | File Name | US1B - scuola muscoline - VV - PO - 06.txt |

| | | |
|---|---|---|
| 101 | 1.51500e-002 | 2.06144e-001 |
| 102 | 1.53000e-002 | 2.06168e-001 |
| 103 | 1.54500e-002 | 2.06192e-001 |
| 104 | 1.56000e-002 | 2.06215e-001 |
| 105 | 1.57500e-002 | 2.06239e-001 |
| 106 | 1.59000e-002 | 2.06263e-001 |
| 107 | 1.60500e-002 | 2.06286e-001 |
| 108 | 1.62000e-002 | 2.06310e-001 |
| 109 | 1.63500e-002 | 2.06334e-001 |
| 110 | 1.65000e-002 | 2.06357e-001 |
| 111 | 1.66500e-002 | 2.06381e-001 |
| 112 | 1.68000e-002 | 2.06405e-001 |
| 113 | 1.69500e-002 | 2.06428e-001 |
| 114 | 1.71000e-002 | 2.06452e-001 |
| 115 | 1.72500e-002 | 2.06476e-001 |
| 116 | 1.74000e-002 | 2.06499e-001 |
| 117 | 1.75500e-002 | 2.06523e-001 |
| 118 | 1.77000e-002 | 2.06547e-001 |
| 119 | 1.78500e-002 | 2.06570e-001 |
| 120 | 1.80000e-002 | 2.06594e-001 |
| 121 | 1.81500e-002 | 2.06618e-001 |
| 122 | 1.83000e-002 | 2.06642e-001 |
| 123 | 1.84500e-002 | 2.06665e-001 |
| 124 | 1.86000e-002 | 2.06689e-001 |
| 125 | 1.87500e-002 | 2.06713e-001 |
| 126 | 1.89000e-002 | 2.06736e-001 |
| 127 | 1.90500e-002 | 2.06760e-001 |
| 128 | 1.92000e-002 | 2.06784e-001 |
| 129 | 1.93500e-002 | 2.06807e-001 |
| 130 | 1.95000e-002 | 2.06831e-001 |
| 131 | 1.96500e-002 | 2.06855e-001 |
| 132 | 1.98000e-002 | 2.06878e-001 |
| 133 | 1.99500e-002 | 2.06902e-001 |
| 134 | 2.01000e-002 | 2.06926e-001 |
| 135 | 2.02500e-002 | 2.06949e-001 |

**PROJECT TITLE :**

| | | | | |
|---|---|---|---|---|
| MIDAS | Company | | Client | |
| | Author | Nicola | File Name | US1B - scuola muscoline - VV - PO - 06.txt |

| | | |
|---|---|---|
| 136 | 2.04000e-002 | 2.06973e-001 |
| 137 | 2.05500e-002 | 2.06997e-001 |
| 138 | 2.07000e-002 | 2.07020e-001 |
| 139 | 2.08500e-002 | 2.07044e-001 |
| 140 | 2.10000e-002 | 2.07068e-001 |
| 141 | 2.11500e-002 | 2.07091e-001 |
| 142 | 2.13000e-002 | 2.07115e-001 |
| 143 | 2.14500e-002 | 2.07139e-001 |
| 144 | 2.16000e-002 | 2.07162e-001 |
| 145 | 2.17500e-002 | 2.07186e-001 |
| 146 | 2.19000e-002 | 2.07210e-001 |
| 147 | 2.20500e-002 | 2.04974e-001 |
| 148 | 2.22000e-002 | 2.05026e-001 |
| 149 | 2.23500e-002 | 2.05079e-001 |
| 150 | 2.25000e-002 | 2.05122e-001 |
| 151 | 2.26500e-002 | 2.05159e-001 |
| 152 | 2.28000e-002 | 2.05195e-001 |
| 153 | 2.29500e-002 | 2.05232e-001 |
| 154 | 2.31000e-002 | 2.05268e-001 |
| 155 | 2.32500e-002 | 2.05305e-001 |
| 156 | 2.34000e-002 | 2.05341e-001 |
| 157 | 2.35500e-002 | 2.03263e-001 |
| 158 | 2.37000e-002 | 2.03312e-001 |
| 159 | 2.38500e-002 | 2.03361e-001 |
| 160 | 2.40000e-002 | 2.03410e-001 |
| 161 | 2.41500e-002 | 2.03459e-001 |
| 162 | 2.43000e-002 | 2.03508e-001 |
| 163 | 2.44500e-002 | 2.03557e-001 |
| 164 | 2.46000e-002 | 2.03606e-001 |
| 165 | 2.47500e-002 | 2.03654e-001 |
| 166 | 2.49000e-002 | 1.75692e-001 |
| 167 | 2.50500e-002 | 1.76247e-001 |
| 168 | 2.52000e-002 | 1.76753e-001 |
| 169 | 2.53500e-002 | 1.77065e-001 |

| | | |
|---|---|---|
| 170 | 2.55000e-002 | 1.77114e-001 |
| 171 | 2.56500e-002 | 1.77163e-001 |
| 172 | 2.58000e-002 | 1.77212e-001 |
| 173 | 2.59500e-002 | 1.77260e-001 |
| 174 | 2.61000e-002 | 1.57258e-001 |
| 175 | 2.62500e-002 | 1.57335e-001 |
| 176 | 2.64000e-002 | 1.49129e-001 |
| 177 | 2.65500e-002 | 1.49217e-001 |
| 178 | 2.67000e-002 | 1.49284e-001 |
| 179 | 2.68500e-002 | 1.49350e-001 |
| 180 | 2.70000e-002 | 1.47345e-001 |
| 181 | 2.71500e-002 | 1.43786e-001 |
| 182 | 2.73000e-002 | 1.43832e-001 |
| 183 | 2.74500e-002 | 1.43874e-001 |
| 184 | 2.76000e-002 | 1.43917e-001 |
| 185 | 2.77500e-002 | 8.50729e-002 |
| 186 | 2.79000e-002 | 8.52937e-002 |
| 187 | 2.80500e-002 | 8.55145e-002 |
| 188 | 2.82000e-002 | 8.57352e-002 |
| 189 | 2.83500e-002 | 8.59560e-002 |
| 190 | 2.85000e-002 | 8.61767e-002 |
| 191 | 2.86500e-002 | 8.63974e-002 |
| 192 | 2.88000e-002 | 8.66181e-002 |
| 193 | 2.89500e-002 | 8.68389e-002 |
| 194 | 2.91000e-002 | 8.70593e-002 |
| 195 | 2.92500e-002 | 8.72759e-002 |
| 196 | 2.94000e-002 | 8.74528e-002 |
| 197 | 2.95500e-002 | 8.76130e-002 |
| 198 | 2.97000e-002 | 8.77634e-002 |
| 199 | 2.98500e-002 | 8.79116e-002 |
| 200 | 3.00000e-002 | 8.61905e-002 |

| | | |
|---|---|---|
| Min : | 1.50000e-005 | 2.07204e-003 |
| Max : | 7.65000e-003 | 2.18512e-001 |

**PROJECT TITLE :**

| | | | | |
|---|---|---|---|---|
| MIDAS | Company | | Client | |
| | Author | Nicola | File Name | US1B - scuola muscoline - VV - PO - 06.txt |

```
 ** midas Gen Pushover Curve Data **
_____________________________________________

[ Target Displacement ]
* Disp. Control Node : 183
* Direction : DY
* Load Pattern Type : Accerelation
* SLO- Demand, Capacity, Step, Remark : 0.012841, 0.005930, 51, N/A
* SLD- Demand, Capacity, Step, Remark : 0.012841, 0.008850, 51, N/A
* SLV- Demand, Capacity, Step, Remark : 0.012841, -, 51, -
* SLC- Demand, Capacity, Step, Remark : 0.012841, -, 51, -
_____________________________________________

- Target Displacement of SLO
  m* = 183.179
  Gamma = 1
  Fy* = 388.113
  T* = 0.217995
  Se(T*) = 0.648g
  det* = 0.00764892
  qu = 2.99905
  Tc = 0.44
  dt* = 0.0128412 (short period range)
  dt = 0.0128412

- Target Displacement of SLD
  m* = 183.179
  Gamma = 1
  Fy* = 388.113
  T* = 0.217995
  Se(T*) = 0.648g
  det* = 0.00764892
  qu = 2.99905
  Tc = 0.44
  dt* = 0.0128412 (short period range)
  dt = 0.0128412

- Target Displacement of SLV
  m* = 183.179
  Gamma = 1
  Fy* = 388.113
  T* = 0.217995
  Se(T*) = 0.648g
  det* = 0.00764892
  qu = 2.99905
  Tc = 0.44
  dt* = 0.0128412 (short period range)
  dt = 0.0128412

- Target Displacement of SLC
  m* = 183.179
  Gamma = 1
  Fy* = 388.113
  T* = 0.217995
  Se(T*) = 0.648g
  det* = 0.00764892
  qu = 2.99905
  Tc = 0.44
  dt* = 0.0128412 (short period range)
  dt = 0.0128412
_____________________________________________

[ Spectral Displacement(Sd) vs. Spectral Acceleration(Sa) ]

Load Case :GU2 -Y   Unit:  kN,m


 Node : 183   Direction : DY   Mode 1
```

**PROJECT TITLE :**

| | | | | |
|---|---|---|---|---|
| MIDAS | Company | | Client | |
| | Author | Nicola | File Name | US1B - scuola muscoline - VV - PO - 06.txt |

| Step<br>Status of Step | Spectral Displacement(Sd) | Spectral Acceleration(Sa) |
|---|---|---|
| 0 | 1.50000e-005 | 1.42095e-003 |
| 1 | 1.50000e-004 | 1.42095e-002 |
| 2 | 3.00000e-004 | 2.84189e-002 |
| 3 | 4.50000e-004 | 4.26284e-002 |
| 4 | 6.00000e-004 | 5.68378e-002 |
| 5 | 7.50000e-004 | 7.10473e-002 |
| 6 | 9.00000e-004 | 8.49733e-002 |
| 7 | 1.05000e-003 | 9.80111e-002 |
| 8 | 1.20000e-003 | 1.10450e-001 |
| 9 | 1.35000e-003 | 1.22112e-001 |
| 10 | 1.50000e-003 | 1.31445e-001 |
| 11 | 1.65000e-003 | 1.38840e-001 |
| 12 | 1.80000e-003 | 1.46235e-001 |
| 13 | 1.95000e-003 | 1.53630e-001 |
| 14 | 2.10000e-003 | 1.60750e-001 |
| 15 | 2.25000e-003 | 1.67151e-001 |
| 16 | 2.40000e-003 | 1.71832e-001 |
| 17 | 2.55000e-003 | 1.76116e-001 |
| 18 | 2.70000e-003 | 1.79848e-001 |
| 19 | 2.85000e-003 | 1.83337e-001 |
| 20 | 3.00000e-003 | 1.86825e-001 |
| 21 | 3.15000e-003 | 1.89902e-001 |
| 22 | 3.30000e-003 | 1.92626e-001 |
| 23 | 3.45000e-003 | 1.95262e-001 |
| 24 | 3.60000e-003 | 1.97486e-001 |
| 25 | 3.75000e-003 | 1.99690e-001 |
| 26 | 3.90000e-003 | 2.01895e-001 |
| 27 | 4.05000e-003 | 2.03946e-001 |
| 28 | 4.20000e-003 | 2.05875e-001 |
| 29 | 4.35000e-003 | 2.07713e-001 |
| 30 | 4.50000e-003 | 2.09535e-001 |
| 31 | 4.65000e-003 | 2.11356e-001 |

**PROJECT TITLE :**

| | Company | | Client | |
|---|---|---|---|---|
| MIDAS | Author | Nicola | File Name | US1B - scuola muscoline - VV - PO - 06.txt |

| | | | |
|---|---|---|---|
| 32 | 4.80000e-003 | 2.13178e-001 | |
| 33 | 4.95000e-003 | 2.14513e-001 | |
| 34 | 5.10000e-003 | 2.15463e-001 | |
| 35 | 5.25000e-003 | 2.16321e-001 | |
| 36 | 5.40000e-003 | 2.17179e-001 | |
| 37 | 5.55000e-003 | 2.18037e-001 | |
| 38 | 5.70000e-003 | 2.18895e-001 | |
| 39 | 5.85000e-003 | 2.19754e-001 | |
| 40 | 6.00000e-003 | 2.20612e-001 | |
| 41 | 6.15000e-003 | 2.21422e-001 | |
| 42 | 6.30000e-003 | 2.22204e-001 | |
| 43 | 6.45000e-003 | 2.22954e-001 | |
| 44 | 6.60000e-003 | 2.23471e-001 | |
| 45 | 6.75000e-003 | 2.23989e-001 | |
| 46 | 6.90000e-003 | 2.24506e-001 | |
| 47 | 7.05000e-003 | 2.25023e-001 | |
| 48 | 7.20000e-003 | 2.25540e-001 | |
| 49 | 7.35000e-003 | 2.26058e-001 | |
| 50 | 7.50000e-003 | 2.26515e-001 | |
| 51 | 7.65000e-003 | 2.26944e-001 | SLO(Dem.)SLD(Dem.)SLV(Dem.)SLC(Dem.) |
| 52 | 7.80000e-003 | 2.27373e-001 | |
| 53 | 7.95000e-003 | 2.27741e-001 | |
| 54 | 8.10000e-003 | 2.27991e-001 | |
| 55 | 8.25000e-003 | 2.28235e-001 | |
| 56 | 8.40000e-003 | 2.28479e-001 | |
| 57 | 8.55000e-003 | 2.28723e-001 | |
| 58 | 8.70000e-003 | 2.28966e-001 | |
| 59 | 8.85000e-003 | 2.29210e-001 | SLD(Cap.) |
| 60 | 9.00000e-003 | 2.20142e-001 | |
| 61 | 9.15000e-003 | 2.20489e-001 | |
| 62 | 9.30000e-003 | 2.20705e-001 | |
| 63 | 9.45000e-003 | 2.20890e-001 | |
| 64 | 9.60000e-003 | 2.20991e-001 | |
| 65 | 9.75000e-003 | 2.21042e-001 | |
| 66 | 9.90000e-003 | 2.21092e-001 | |

**PROJECT TITLE :**

| | | | | |
|---|---|---|---|---|
| MIDAS | Company | | Client | |
| | Author | Nicola | File Name | US1B - scuola muscoline - VV - PO - 06.txt |

| | | |
|---|---|---|
| 67 | 1.00500e-002 | 2.21143e-001 |
| 68 | 1.02000e-002 | 2.21194e-001 |
| 69 | 1.03500e-002 | 2.21244e-001 |
| 70 | 1.05000e-002 | 2.21295e-001 |
| 71 | 1.06500e-002 | 2.21346e-001 |
| 72 | 1.08000e-002 | 2.21396e-001 |
| 73 | 1.09500e-002 | 2.21447e-001 |
| 74 | 1.11000e-002 | 2.21498e-001 |
| 75 | 1.12500e-002 | 2.21549e-001 |
| 76 | 1.14000e-002 | 2.21599e-001 |
| 77 | 1.15500e-002 | 2.21650e-001 |
| 78 | 1.17000e-002 | 2.21701e-001 |
| 79 | 1.18500e-002 | 2.21751e-001 |
| 80 | 1.20000e-002 | 2.21802e-001 |
| 81 | 1.21500e-002 | 2.21853e-001 |
| 82 | 1.23000e-002 | 2.21903e-001 |
| 83 | 1.24500e-002 | 2.21954e-001 |
| 84 | 1.26000e-002 | 2.22005e-001 |
| 85 | 1.27500e-002 | 2.22055e-001 |
| 86 | 1.29000e-002 | 2.22106e-001 |
| 87 | 1.30500e-002 | 2.22157e-001 |
| 88 | 1.32000e-002 | 2.22208e-001 |
| 89 | 1.33500e-002 | 2.22258e-001 |
| 90 | 1.35000e-002 | 2.22309e-001 |
| 91 | 1.36500e-002 | 2.14395e-001 |
| 92 | 1.38000e-002 | 2.14545e-001 |
| 93 | 1.39500e-002 | 2.14695e-001 |
| 94 | 1.41000e-002 | 2.14816e-001 |
| 95 | 1.42500e-002 | 2.14900e-001 |
| 96 | 1.44000e-002 | 2.14983e-001 |
| 97 | 1.45500e-002 | 2.15041e-001 |
| 98 | 1.47000e-002 | 2.15091e-001 |
| 99 | 1.48500e-002 | 2.15142e-001 |
| 100 | 1.50000e-002 | 2.15192e-001 |

**PROJECT TITLE :**

| | | | | |
|---|---|---|---|---|
| MIDAS | Company | | Client | |
| | Author | Nicola | File Name | US1B - scuola muscoline - VV - PO - 06.txt |

| | | |
|---|---|---|
| 101 | 1.51500e-002 | 2.15243e-001 |
| 102 | 1.53000e-002 | 2.15293e-001 |
| 103 | 1.54500e-002 | 2.15344e-001 |
| 104 | 1.56000e-002 | 2.15395e-001 |
| 105 | 1.57500e-002 | 2.15445e-001 |
| 106 | 1.59000e-002 | 2.15496e-001 |
| 107 | 1.60500e-002 | 2.15546e-001 |
| 108 | 1.62000e-002 | 2.15597e-001 |
| 109 | 1.63500e-002 | 2.15647e-001 |
| 110 | 1.65000e-002 | 2.15698e-001 |
| 111 | 1.66500e-002 | 2.15748e-001 |
| 112 | 1.68000e-002 | 2.15799e-001 |
| 113 | 1.69500e-002 | 2.15849e-001 |
| 114 | 1.71000e-002 | 2.15900e-001 |
| 115 | 1.72500e-002 | 2.15950e-001 |
| 116 | 1.74000e-002 | 2.16001e-001 |
| 117 | 1.75500e-002 | 2.16051e-001 |
| 118 | 1.77000e-002 | 2.16102e-001 |
| 119 | 1.78500e-002 | 2.16152e-001 |
| 120 | 1.80000e-002 | 2.16203e-001 |
| 121 | 1.81500e-002 | 2.16254e-001 |
| 122 | 1.83000e-002 | 2.16304e-001 |
| 123 | 1.84500e-002 | 2.16348e-001 |
| 124 | 1.86000e-002 | 2.16372e-001 |
| 125 | 1.87500e-002 | 2.16396e-001 |
| 126 | 1.89000e-002 | 2.16420e-001 |
| 127 | 1.90500e-002 | 2.16443e-001 |
| 128 | 1.92000e-002 | 2.16467e-001 |
| 129 | 1.93500e-002 | 2.16491e-001 |
| 130 | 1.95000e-002 | 2.16515e-001 |
| 131 | 1.96500e-002 | 2.16538e-001 |
| 132 | 1.98000e-002 | 2.16562e-001 |
| 133 | 1.99500e-002 | 2.16586e-001 |
| 134 | 2.01000e-002 | 2.16610e-001 |
| 135 | 2.02500e-002 | 2.16633e-001 |

**PROJECT TITLE :**

| | | | | |
|---|---|---|---|---|
| MIDAS | Company | | Client | |
| | Author | Nicola | File Name | US1B - scuola muscoline - VV - PO - 06.txt |

| | | |
|---|---|---|
| 136 | 2.04000e-002 | 2.16657e-001 |
| 137 | 2.05500e-002 | 2.16681e-001 |
| 138 | 2.07000e-002 | 2.16705e-001 |
| 139 | 2.08500e-002 | 2.16728e-001 |
| 140 | 2.10000e-002 | 2.16752e-001 |
| 141 | 2.11500e-002 | 2.16776e-001 |
| 142 | 2.13000e-002 | 2.16800e-001 |
| 143 | 2.14500e-002 | 2.16823e-001 |
| 144 | 2.16000e-002 | 2.16847e-001 |
| 145 | 2.17500e-002 | 2.16871e-001 |
| 146 | 2.19000e-002 | 2.16895e-001 |
| 147 | 2.20500e-002 | 2.16918e-001 |
| 148 | 2.22000e-002 | 2.16942e-001 |
| 149 | 2.23500e-002 | 2.16966e-001 |
| 150 | 2.25000e-002 | 2.16990e-001 |
| 151 | 2.26500e-002 | 2.17013e-001 |
| 152 | 2.28000e-002 | 2.17037e-001 |
| 153 | 2.29500e-002 | 2.17061e-001 |
| 154 | 2.31000e-002 | 2.17085e-001 |
| 155 | 2.32500e-002 | 2.17108e-001 |
| 156 | 2.34000e-002 | 2.17132e-001 |
| 157 | 2.35500e-002 | 2.17156e-001 |
| 158 | 2.37000e-002 | 2.17180e-001 |
| 159 | 2.38500e-002 | 2.17203e-001 |
| 160 | 2.40000e-002 | 2.17227e-001 |
| 161 | 2.41500e-002 | 2.14954e-001 |
| 162 | 2.43000e-002 | 2.15009e-001 |
| 163 | 2.44500e-002 | 2.15064e-001 |
| 164 | 2.46000e-002 | 2.12925e-001 |
| 165 | 2.47500e-002 | 2.13010e-001 |
| 166 | 2.49000e-002 | 2.13085e-001 |
| 167 | 2.50500e-002 | 2.13135e-001 |
| 168 | 2.52000e-002 | 2.13186e-001 |
| 169 | 2.53500e-002 | 2.13236e-001 |

| | | |
|---|---|---|
| 170 | 2.55000e-002 | 2.13286e-001 |
| 171 | 2.56500e-002 | 2.13336e-001 |
| 172 | 2.58000e-002 | 2.11213e-001 |
| 173 | 2.59500e-002 | 2.11269e-001 |
| 174 | 2.61000e-002 | 2.11325e-001 |
| 175 | 2.62500e-002 | 1.87967e-001 |
| 176 | 2.64000e-002 | 1.84072e-001 |
| 177 | 2.65500e-002 | 1.84790e-001 |
| 178 | 2.67000e-002 | 1.85135e-001 |
| 179 | 2.68500e-002 | 1.85383e-001 |
| 180 | 2.70000e-002 | 1.85631e-001 |
| 181 | 2.71500e-002 | 1.85872e-001 |
| 182 | 2.73000e-002 | 1.86103e-001 |
| 183 | 2.74500e-002 | 1.86333e-001 |
| 184 | 2.76000e-002 | 1.86564e-001 |
| 185 | 2.77500e-002 | 1.86794e-001 |
| 186 | 2.79000e-002 | 1.87025e-001 |
| 187 | 2.80500e-002 | 1.87234e-001 |
| 188 | 2.82000e-002 | 1.87284e-001 |
| 189 | 2.83500e-002 | 1.87334e-001 |
| 190 | 2.85000e-002 | 1.54750e-001 |
| 191 | 2.86500e-002 | 1.54832e-001 |
| 192 | 2.88000e-002 | 1.54893e-001 |
| 193 | 2.89500e-002 | 1.53032e-001 |
| 194 | 2.91000e-002 | 1.53075e-001 |
| 195 | 2.92500e-002 | 1.53116e-001 |
| 196 | 2.94000e-002 | 1.53156e-001 |
| 197 | 2.95500e-002 | 1.53196e-001 |
| 198 | 2.97000e-002 | 1.49637e-001 |
| 199 | 2.98500e-002 | 1.49678e-001 |
| 200 | 3.00000e-002 | 1.47622e-001 |

| | | |
|---|---|---|
| Min : | 1.50000e-005 | 1.42095e-003 |
| Max : | 8.85000e-003 | 2.29210e-001 |

### *1.3.3 Allineamento C*

```
;---------------------------------------------------------------------------
;  midas Gen Text(MGT) File.
;  Date : 2020/6/15
;---------------------------------------------------------------------------

*VERSION
   8.8.1

*UNIT    ; Unit System
; FORCE, LENGTH, HEAT, TEMPER
   KN   , M, BTU, F

*PROJINFO    ; Project Information
; PROJECT, REVISION, USER, EMAIL, ADDRESS, TEL, FAX, CLIENT, TITLE, ENGINEER, EDATE
    ; One Line per Data
; CHECK1, CDATE1, CHECK2, CDATE2, CHECK3, CDATE3, APPROVE, ADATE, COMMENT
    ; One Line per Data
   USER=Nicola
   ADDRESS=DiMoRe

*STRUCTYPE    ; Structure Type
; iSTYP, iMASS, iSMAS, bMASSOFFSET, bSELFWEIGHT, GRAV, TEMPER, bALIGNBEAM, bALIGNSLAB,
 bROTRIGID
     2, 1, 1, NO, YES, 9.806, 0, NO, NO, YES

*REBAR-MATL-CODE    ; Rebar Material Code
; CONC_CODE, CONC_MDB, SRC_CODE, SRC_MDB
 NTC08(RC), B450C, ASTM(RC), Grade 60

*NODE    ; Nodes
; iNO, X, Y, Z
    89, 3.69999537783395, 16.6249995830378, -1
    90, 3.69999537783293, 12.3349995830378, -1
   186, 3.69999537783293, 12.3349995830378, 3.35
   192, 3.69999537783395, 16.6249995830378, 3.35
   249, 3.69999537783395, 20.5999995830378, -1
   250, 3.69999537783206, 20.5999995830378, 3.35
   253, 3.69999537783289, 12.7010418908233, 3.35
   466, 3.69999537783293, 12.3349995830378, 2.75
   467, 3.69999537783395, 16.6249995830378, 2.75
   468, 3.69999537783206, 20.5999995830378, 2.75
   469, 3.69999537783293, 12.3349995830378, 3.05
   470, 3.69999537783395, 16.6249995830378, 3.05
   471, 3.69999537783206, 20.5999995830378, 3.05
   472, 3.69999537783395, 17.0449995830378, 3.05
   473, 3.69999537783293, 12.9099995830378, 3.05
   475, 3.69999537783206, 20.4199995830378, 3.05
   476, 3.69999537783395, 16.2049995830378, 3.05

*ELEMENT    ; Elements
; iEL, TYPE, iMAT, iPRO, iN1, iN2, ANGLE, iSUB,                      ; Frame  Element
; iEL, TYPE, iMAT, iPRO, iN1, iN2, ANGLE, iSUB, EXVAL, EXVAL2, bLMT ; Comp/Tens Truss
; iEL, TYPE, iMAT, iPRO, iN1, iN2, iN3, iN4, iSUB, iWID , LCAXIS    ; Planar Element
; iEL, TYPE, iMAT, iPRO, iN1, iN2, iN3, iN4, iN5, iN6, iN7, iN8     ; Solid  Element
    14, BEAM  ,    1,   108,    90,   466,    90,     0
    15, BEAM  ,    1,   114,    89,   467,    90,     0
    16, BEAM  ,    1,    19,   249,   468,     0,     0
  6038, BEAM  ,    6,   701,   186,   253,     0,     0
  6046, BEAM  ,    6,   703,   253,   192,     0,     0
  6057, BEAM  ,    6,   703,   192,   250,     0,     0
  6114, BEAM  ,    2,   108,   466,   469,    90,     0
  6115, BEAM  ,    2,   114,   467,   470,    90,     0
```

```
  6116, BEAM  ,    2,    19,   468,   471,     0,     0
  6117, BEAM  ,    2,   108,   469,   186,    90,     0
  6118, BEAM  ,    2,   114,   470,   192,    90,     0
  6119, BEAM  ,    2,    19,   471,   250,     0,     0
  6120, BEAM  ,    2,   709,   469,   473,     0,     0
  6121, BEAM  ,    2,   709,   470,   472,     0,     0
  6122, BEAM  ,    1,   709,   472,   475,     0,     0
  6123, BEAM  ,    1,   709,   473,   476,     0,     0
  6125, BEAM  ,    2,   709,   475,   471,     0,     0
  6126, BEAM  ,    2,   709,   476,   470,     0,     0

*GROUP    ; Group
; NAME, NODE_LIST, ELEM_LIST, PLANE_TYPE
   Midas     , , , 0
   SPUTTANATI, , , 0
   P2-P3 CA  , , , 0
   Linee sezione (D), , , 0

*BNDR-GROUP    ; Boundary Group
; NAME, AUTOTYPE
 fasce, 0
 pilastrini, 0

*MATERIAL    ; Material
; iMAT, TYPE, MNAME, SPHEAT, HEATCO, PLAST, TUNIT, bMASS, DAMPRATIO, [DATA1]
 ; STEEL, CONC, ALUMINUM, USER
; iMAT, TYPE, MNAME, SPHEAT, HEATCO, PLAST, TUNIT, bMASS, DAMPRATIO, [DATA2], [DATA2]
 ; SRC
; [DATA1] : 1, STANDARD, CODE/PRODUCT, DB, USEELAST, ELAST
; [DATA1] : 2, ELAST, POISN, THERMAL, DEN, MASS
; [DATA1] : 3, Ex, Ey, Ez, Tx, Ty, Tz, Sxy, Sxz, Syz, Pxy, Pxz, Pyz, DEN, MASS
 ; Orthotropic
; [DATA2] : 1, STANDARD, CODE/PRODUCT, DB, USEELAST, ELAST or 2, ELAST, POISN, THERMAL
, DEN, MASS
    1, USER , MA                , 0, 0, , C, NO, 0.05, 2, 1.5000e+006,  0.45, 0.0000e+
000,    18,     0
    2, USER , MA rigid          , 0, 0, , C, NO, 0.05, 2, 1.5000e+008,  0.45, 0.0000e+
000,     9,     0
    3, USER , MB                , 0, 0, , C, NO, 0.05, 2, 3.6000e+006,  0.45, 0.0000e+
000,    12,     0
    4, USER , MB rigid          , 0, 0, , C, NO, 0.05, 2, 3.6000e+008,  0.45, 0.0000e+
000,     6,     0
    5, USER , C16/20rigid       , 0, 0, , C, NO, 0, 2, 2.8607e+009,   0.2, 0.0000e+000
,    25,     0
    6, CONC , C16/20            , 0, 0, , C, NO, 0.05, 1, EN04(RC)   ,            , C1
6/20        , NO, 2.8607e+007

*MATL-COLOR
; iMAT, W_R, W_G, W_B, HF_R, HF_G, HF_B, HE_R, HE_G, HE_B, bBLEND, FACT
    1,   0,   0,   0,  255, 128,  64,    0,   0,   0,  NO, 0.5
    2,   0,   0,   0,  255, 128, 128,    0,   0,   0,  NO, 0.5
    3,   0,   0,   0,    0, 128,   0,    0,   0,   0,  NO, 0.5
    4,   0,   0,   0,    0, 206, 103,    0,   0,   0,  NO, 0.5
    5, 128,   0, 128,  255,   0,   0,    0, 255,   0,  NO, 0.5
    6,   0,   0,   0,  192, 192, 192,    0,   0,   0,  NO, 0.5


*SECTION    ; Section
; iSEC, TYPE, SNAME, [OFFSET], bSD, bWE, SHAPE, [DATA1], [DATA2]                    ;
1st line - DB/USER
; iSEC, TYPE, SNAME, [OFFSET], bSD, bWE, SHAPE, BLT, D1, ..., D8, iCEL              ;
1st line - VALUE
```

```
;       AREA, ASy, ASz, Ixx, Iyy, Izz                                           ;
2nd line
;       CyP, CyM, CzP, CzM, QyB, QzB, PERI_OUT, PERI_IN, Cy, Cz                 ;
3rd line
;       Y1, Y2, Y3, Y4, Z1, Z2, Z3, Z4, Zyy, Zzz                                ;
4th line
; iSEC, TYPE, SNAME, [OFFSET], bSD, bWE, SHAPE, ELAST, DEN, POIS, POIC, SF, THERMAL ;
1st line - SRC
;       D1, D2, [SRC]                                                           ;
2nd line
; iSEC, TYPE, SNAME, [OFFSET], bSD, bWE, SHAPE, 1, DB, NAME1, NAME2, D1, D2     ;
1st line - COMBINED
; iSEC, TYPE, SNAME, [OFFSET], bSD, bWE, SHAPE, 2, D11, D12, D13, D14, D15, D21, D22,
D23, D24
; iSEC, TYPE, SNAME, [OFFSET2], bSD, bWE, SHAPE, iyVAR, izVAR, STYPE            ;
1st line - TAPERED
;       DB, NAME1, NAME2                                                        ;
2nd line(STYPE=DB)
;       [DIM1], [DIM2]                                                          ;
2nd line(STYPE=USER)
;       D11, D12, D13, D14, D15, D16, D17, D18                                  ;
2nd line(STYPE=VALUE)
;       AREA1, ASy1, ASz1, Ixx1, Iyy1, Izz1                                     ;
3rd line(STYPE=VALUE)
;       CyP1, CyM1, CzP1, CzM1, QyB1, QzB1, PERI_OUT1, PERI_IN1, Cy1, Cz1       ;
4th line(STYPE=VALUE)
;       Y11, Y12, Y13, Y14, Z11, Z12, Z13, Z14, Zyy1, Zyy2                      ;
5th line(STYPE=VALUE)
;       D21, D22, D23, D24, D25, D26, D27, D28                                  ;
6th line(STYPE=VALUE)
;       AREA2, ASy2, ASz2, Ixx2, Iyy2, Izz2                                     ;
7th line(STYPE=VALUE)
;       CyP2, CyM2, CzP2, CzM2, QyB2, QzB2, PERI_OUT2, PERI_IN2, Cy2, Cz2       ;
8th line(STYPE=VALUE)
;       Y21, Y22, Y23, Y24, Z21, Z22, Z23, Z24, Zyy2, Zzz2                      ;
9th line(STYPE=VALUE)
; iSEC, TYPE, SNAME, [OFFSET], bSD, bWE, SHAPE                                  ;
1st line - COMPOSITE-B
;       Hw, tw, B1, Bf1, tf1, B2, Bf2, tf2                                      ;
2nd line
;       [SHAPE-NUM], [STIFF-SHAPE], [STIFF-POS] (1~4)                           ;
3rd line
;       SW, GN, CTC, Bc, Tc, Hh, EsEc, DsDc, Ps, Pc, TsTc, bMulti, Elong, Esh   ;
4th line
; iSEC, TYPE, SNAME, [OFFSET], bSD, bWE, SHAPE                                  ;
1st line - COMPOSITE-I
;       Hw, tw, B1, tf1, B2, tf2                                                ;
2nd line
;       [SHAPE-NUM], [STIFF-SHAPE], [STIFF-POS] (1~2)                           ;
3rd line
;       SW, GN, CTC, Bc, Tc, Hh, EsEc, DsDc, Ps, Pc, TsTc, bMulti, Elong, Esh   ;
4th line
; iSEC, TYPE, SNAME, [OFFSET], bSD, bWE, SHAPE                                  ;
1st line - COMPOSITE-TUB
;       Hw, tw, B1, Bf1, tf1, B2, Bf2, tf2, Bf3, tfp                            ;
2nd line
;       [SHAPE-NUM], [STIFF-SHAPE], [STIFF-POS] (1~3)                           ;
3rd line
;       SW, GN, CTC, Bc, Tc, Hh, EsEc, DsDc, Ps, Pc, TsTc, bMulti, Elong, Esh   ;
4th line
; [DATA1] : 1, DB, NAME or 2, D1, D2, D3, D4, D5, D6, D7, D8, D9, D10
; [DATA2] : CCSHAPE or iCEL or iN1, iN2
```

```
; [SRC]  : 1, DB, NAME1, NAME2 or 2, D1, D2, D3, D4, D5, D6, D7, D8, D9, D10, iN1, iN2

; [DIM1], [DIM2] : D1, D2, D3, D4, D5, D6, D7, D8
; [OFFSET] : OFFSET, iCENT, iREF, iHORZ, HUSER, iVERT, VUSER
; [OFFSET2]: OFFSET, iCENT, iREF, iHORZ, HUSERI, HUSERJ, iVERT, VUSERI, VUSERJ
; [SHAPE-NUM]: SHAPE-NUM, POS, STIFF-NUM1, STIFF-NUM2, STIFF-NUM3, STIFF-NUM4
; [STIFF-SHAPE]: SHAPE-NUM, for(SHAPE-NUM) { NAME, SIZE1~8 }
; [STIFF-POS]: STIFF-NUM, for(STIFF-NUM) { SPACING, iSHAPE, bCALC }
    1, DBUSER    , L0_X1            , CC, 0, 0, 0, 0, 0, 0, YES, NO, SB , 2, 1.93, 0.
36, 0, 0, 0, 0, 0, 0, 0, 0
    2, DBUSER    , L0_X2            , CC, 0, 0, 0, 0, 0, 0, YES, NO, SB , 2, 0.65, 0.
36, 0, 0, 0, 0, 0, 0, 0, 0
    3, DBUSER    , L0_X2bis         , CC, 0, 0, 0, 0, 0, 0, YES, NO, SB , 2, 1.225, 0
.36, 0, 0, 0, 0, 0, 0, 0, 0
    4, DBUSER    , L0_X3            , CC, 0, 0, 0, 0, 0, 0, YES, NO, SB , 2, 1.83, 0.
36, 0, 0, 0, 0, 0, 0, 0, 0
    5, DBUSER    , L0_X4            , CC, 0, 0, 0, 0, 0, 0, YES, NO, SB , 2, 1.25, 0.
36, 0, 0, 0, 0, 0, 0, 0, 0
    6, DBUSER    , L0_X5            , CC, 0, 0, 0, 0, 0, 0, YES, NO, SB , 2, 0.47, 0.
36, 0, 0, 0, 0, 0, 0, 0, 0
    7, DBUSER    , L0_X6            , CC, 0, 0, 0, 0, 0, 0, YES, NO, SB , 2, 4.68, 0.
25, 0, 0, 0, 0, 0, 0, 0, 0
    8, DBUSER    , L0_X7            , CC, 0, 0, 0, 0, 0, 0, YES, NO, SB , 2, 1.53, 0.
25, 0, 0, 0, 0, 0, 0, 0, 0
    9, DBUSER    , L0_X8            , CC, 0, 0, 0, 0, 0, 0, YES, NO, SB , 2, 1.75, 0.
25, 0, 0, 0, 0, 0, 0, 0, 0
   10, DBUSER    , L0_X9            , CC, 0, 0, 0, 0, 0, 0, YES, NO, SB , 2, 1.33, 0.
25, 0, 0, 0, 0, 0, 0, 0, 0
   11, DBUSER    , L0_X10           , CC, 0, 0, 0, 0, 0, 0, YES, NO, SB , 2, 0.78, 0.
36, 0, 0, 0, 0, 0, 0, 0, 0
   12, DBUSER    , L0_X11           , CC, 0, 0, 0, 0, 0, 0, YES, NO, SB , 2, 2.95, 0.
36, 0, 0, 0, 0, 0, 0, 0, 0
   13, DBUSER    , L0_X12           , CC, 0, 0, 0, 0, 0, 0, YES, NO, SB , 2, 1.63, 0.
36, 0, 0, 0, 0, 0, 0, 0, 0
   14, DBUSER    , L0_X13           , CC, 0, 0, 0, 0, 0, 0, YES, NO, SB , 2, 0.75, 0.
25, 0, 0, 0, 0, 0, 0, 0, 0
   15, DBUSER    , L0_X14           , CC, 0, 0, 0, 0, 0, 0, YES, NO, SB , 2, 4.47, 0.
25, 0, 0, 0, 0, 0, 0, 0, 0
   16, DBUSER    , L0_X15           , CC, 0, 0, 0, 0, 0, 0, YES, NO, SB , 2, 4.83, 0.
25, 0, 0, 0, 0, 0, 0, 0, 0
   17, DBUSER    , L0_X16           , CC, 0, 0, 0, 0, 0, 0, YES, NO, SB , 2, 0.3, 0.3
6, 0, 0, 0, 0, 0, 0, 0, 0
   18, DBUSER    , L0_X17           , CC, 0, 0, 0, 0, 0, 0, YES, NO, SB , 2, 0.5, 0.3
6, 0, 0, 0, 0, 0, 0, 0, 0
   19, DBUSER    , L0_X18           , CC, 0, 0, 0, 0, 0, 0, YES, NO, SB , 2, 0.65, 0.
36, 0, 0, 0, 0, 0, 0, 0, 0
   22, DBUSER    , L0_X21           , CC, 0, 0, 0, 0, 0, 0, YES, NO, SB , 2, 3.68, 0.
25, 0, 0, 0, 0, 0, 0, 0, 0
   23, DBUSER    , L0_X22           , CC, 0, 0, 0, 0, 0, 0, YES, NO, SB , 2, 1.6, 0.2
5, 0, 0, 0, 0, 0, 0, 0, 0
   24, DBUSER    , L0_X23           , CC, 0, 0, 0, 0, 0, 0, YES, NO, SB , 2, 3.77, 0.
25, 0, 0, 0, 0, 0, 0, 0, 0
   25, DBUSER    , L0_X24           , CC, 0, 0, 0, 0, 0, 0, YES, NO, SB , 2, 0.95, 0.
25, 0, 0, 0, 0, 0, 0, 0, 0
   26, DBUSER    , L0_X25           , CC, 0, 0, 0, 0, 0, 0, YES, NO, SB , 2, 6.45, 0.
25, 0, 0, 0, 0, 0, 0, 0, 0
   27, DBUSER    , L0_X26           , CC, 0, 0, 0, 0, 0, 0, YES, NO, SB , 2, 4.83, 0.
25, 0, 0, 0, 0, 0, 0, 0, 0
   28, DBUSER    , L0_X27           , CC, 0, 0, 0, 0, 0, 0, YES, NO, SB , 2, 0.97, 0.
36, 0, 0, 0, 0, 0, 0, 0, 0
   29, DBUSER    , L0_X28           , CC, 0, 0, 0, 0, 0, 0, YES, NO, SB , 2, 1.19, 0.
36, 0, 0, 0, 0, 0, 0, 0, 0
```

```
   30, DBUSER    , L0_X29            , CC, 0, 0, 0, 0, 0, 0, YES, NO, SB , 2, 1, 0.36,
 0, 0, 0, 0, 0, 0, 0, 0
   31, DBUSER    , L0_X30            , CC, 0, 0, 0, 0, 0, 0, YES, NO, SB , 2, 0.29, 0.
36, 0, 0, 0, 0, 0, 0, 0, 0
   32, DBUSER    , L0_X31            , CC, 0, 0, 0, 0, 0, 0, YES, NO, SB , 2, 0.19, 0.
36, 0, 0, 0, 0, 0, 0, 0, 0
   33, DBUSER    , L0_X32            , CC, 0, 0, 0, 0, 0, 0, YES, NO, SB , 2, 0.29, 0.
36, 0, 0, 0, 0, 0, 0, 0, 0
   34, DBUSER    , L0_X33            , CC, 0, 0, 0, 0, 0, 0, YES, NO, SB , 2, 1.29, 0.
36, 0, 0, 0, 0, 0, 0, 0, 0
   35, DBUSER    , L0_X33bis         , CC, 0, 0, 0, 0, 0, 0, YES, NO, SB , 2, 0.95, 0.
36, 0, 0, 0, 0, 0, 0, 0, 0
   36, DBUSER    , L0_X34            , CC, 0, 0, 0, 0, 0, 0, YES, NO, SB , 2, 1.55, 0.
36, 0, 0, 0, 0, 0, 0, 0, 0
   37, DBUSER    , L0_X35            , CC, 0, 0, 0, 0, 0, 0, YES, NO, SB , 2, 6.35, 0.
36, 0, 0, 0, 0, 0, 0, 0, 0
   38, DBUSER    , L0_X22bis         , CC, 0, 0, 0, 0, 0, 0, YES, NO, SB , 2, 1.28, 0.
25, 0, 0, 0, 0, 0, 0, 0, 0
  100, DBUSER    , L0_Y01            , CC, 0, 0, 0, 0, 0, 0, YES, NO, SB , 2, 7.4, 0.3
6, 0, 0, 0, 0, 0, 0, 0, 0
  101, DBUSER    , L0_Y02            , CC, 0, 0, 0, 0, 0, 0, YES, NO, SB , 2, 1.62, 0.
25, 0, 0, 0, 0, 0, 0, 0, 0
  102, DBUSER    , L0_Y02bis         , CC, 0, 0, 0, 0, 0, 0, YES, NO, SB , 2, 2.18, 0.
25, 0, 0, 0, 0, 0, 0, 0, 0
  103, DBUSER    , L0_Y02tris        , CC, 0, 0, 0, 0, 0, 0, YES, NO, SB , 2, 3.55, 0.
25, 0, 0, 0, 0, 0, 0, 0, 0
  104, DBUSER    , L0_Y03            , CC, 0, 0, 0, 0, 0, 0, YES, NO, SB , 2, 1.54, 0.
36, 0, 0, 0, 0, 0, 0, 0, 0
  105, DBUSER    , L0_Y04            , CC, 0, 0, 0, 0, 0, 0, YES, NO, SB , 2, 1.2, 0.3
6, 0, 0, 0, 0, 0, 0, 0, 0
  106, DBUSER    , L0_Y04bis         , CC, 0, 0, 0, 0, 0, 0, YES, NO, SB , 2, 0.59, 0.
36, 0, 0, 0, 0, 0, 0, 0, 0
  107, DBUSER    , L0_Y05            , CC, 0, 0, 0, 0, 0, 0, YES, NO, SB , 2, 1.25, 0.
25, 0, 0, 0, 0, 0, 0, 0, 0
  108, DBUSER    , L0_Y06            , CC, 0, 0, 0, 0, 0, 0, YES, NO, SB , 2, 1.15, 0.
36, 0, 0, 0, 0, 0, 0, 0, 0
  109, DBUSER    , L0_Y07            , CC, 0, 0, 0, 0, 0, 0, YES, NO, SB , 2, 1.18, 0.
25, 0, 0, 0, 0, 0, 0, 0, 0
  110, DBUSER    , L0_Y08            , CC, 0, 0, 0, 0, 0, 0, YES, NO, SB , 2, 2.75, 0.
36, 0, 0, 0, 0, 0, 0, 0, 0
  111, DBUSER    , L0_Y09            , CC, 0, 0, 0, 0, 0, 0, YES, NO, SB , 2, 6.43, 0.
25, 0, 0, 0, 0, 0, 0, 0, 0
  112, DBUSER    , L0_Y10            , CC, 0, 0, 0, 0, 0, 0, YES, NO, SB , 2, 6.43, 0.
25, 0, 0, 0, 0, 0, 0, 0, 0
  113, DBUSER    , L0_Y11            , CC, 0, 0, 0, 0, 0, 0, YES, NO, SB , 2, 6.43, 0.
36, 0, 0, 0, 0, 0, 0, 0, 0
  114, DBUSER    , L0_Y12            , CC, 0, 0, 0, 0, 0, 0, YES, NO, SB , 2, 0.84, 0.
36, 0, 0, 0, 0, 0, 0, 0, 0
  115, DBUSER    , L0_Y13            , CC, 0, 0, 0, 0, 0, 0, YES, NO, SB , 2, 0.83, 0.
25, 0, 0, 0, 0, 0, 0, 0, 0
  116, DBUSER    , L0_Y14            , CC, 0, 0, 0, 0, 0, 0, YES, NO, SB , 2, 2.55, 0.
36, 0, 0, 0, 0, 0, 0, 0, 0
  117, DBUSER    , L0_Y14bis         , CC, 0, 0, 0, 0, 0, 0, YES, NO, SB , 2, 4.11, 0.
25, 0, 0, 0, 0, 0, 0, 0, 0
  118, DBUSER    , L0_Y15            , CC, 0, 0, 0, 0, 0, 0, YES, NO, SB , 2, 1.37, 0.
36, 0, 0, 0, 0, 0, 0, 0, 0
  119, DBUSER    , L0_Y16            , CC, 0, 0, 0, 0, 0, 0, YES, NO, SB , 2, 5.61, 0.
36, 0, 0, 0, 0, 0, 0, 0, 0
  120, DBUSER    , L0_Y17            , CC, 0, 0, 0, 0, 0, 0, YES, NO, SB , 2, 4.69, 0.
25, 0, 0, 0, 0, 0, 0, 0, 0
  121, DBUSER    , L0_Y17bis         , CC, 0, 0, 0, 0, 0, 0, YES, NO, SB , 2, 1.35, 0.
25, 0, 0, 0, 0, 0, 0, 0, 0
```

```
  122, DBUSER    , L0_Y18            , CC, 0, 0, 0, 0, 0, 0, YES, NO, SB , 2, 1.79, 0.
36, 0, 0, 0, 0, 0, 0, 0, 0
  700, DBUSER    , Pilastro fitt     , CC, 0, 0, 0, 0, 0, 0, YES, NO, SB , 2, 0.248, 0
.248, 0, 0, 0, 0, 0, 0, 0, 0
  701, DBUSER    , cordolo 40x21     , CC, 0, 0, 0, 0, 0, 0, YES, NO, SB , 2, 0.21, 0.
4, 0, 0, 0, 0, 0, 0, 0, 0
  702, DBUSER    , cordolo 30x21     , CC, 0, 0, 0, 0, 0, 0, YES, NO, SB , 2, 0.21, 0.
3, 0, 0, 0, 0, 0, 0, 0, 0
  703, DBUSER    , cordolo RIGID     , CC, 0, 0, 0, 0, 0, 0, YES, NO, SB , 2, 0.2, 0.4
, 0, 0, 0, 0, 0, 0, 0, 0
  704, DBUSER    , cordolo fitt      , CC, 0, 0, 0, 0, 0, 0, YES, NO, SB , 2, 0.2, 0.2
5, 0, 0, 0, 0, 0, 0, 0, 0
  707, DBUSER    , Pilastro 50x25    , CC, 0, 0, 0, 0, 0, 0, YES, NO, SB , 2, 0.5, 0.2
5, 0, 0, 0, 0, 0, 0, 0, 0
  708, DBUSER    , Trave             , CC, 0, 0, 0, 0, 0, 0, YES, NO, SB , 2, 0.25, 0.
55, 0, 0, 0, 0, 0, 0, 0, 0
  709, DBUSER    , Fascia 0.60x0.36  , CC, 0, 0, 0, 0, 0, 0, YES, NO, SB , 2, 0.6, 0.3
6, 0, 0, 0, 0, 0, 0, 0, 0
  710, DBUSER    , Fascia 1.45x0.25  , CC, 0, 0, 0, 0, 0, 0, YES, NO, SB , 2, 1.45, 0.
25, 0, 0, 0, 0, 0, 0, 0, 0
  711, DBUSER    , Fascia 0.95x0.25  , CC, 0, 0, 0, 0, 0, 0, YES, NO, SB , 2, 0.95, 0.
25, 0, 0, 0, 0, 0, 0, 0, 0
  712, DBUSER    , Fascia 0.45x0.36  , CC, 0, 0, 0, 0, 0, 0, YES, NO, SB , 2, 0.45, 0.
36, 0, 0, 0, 0, 0, 0, 0, 0
 1000, DBUSER    , LINE              , CC, 0, 0, 0, 0, 0, 0, YES, NO, SB , 2, 0.01, 0.
01, 0, 0, 0, 0, 0, 0, 0, 0

*SECT-COLOR
; iSEC, W_R, W_G, W_B, HF_R, HF_G, HF_B, HE_R, HE_G, HE_B, bBLEND, FACT
    1, 128,   0, 128,  255,   0,   0,    0, 255,   0,  NO, 0.5
    2, 128,   0, 128,  255,   0,   0,    0, 255,   0,  NO, 0.5
    3, 128,   0, 128,  255,   0,   0,    0, 255,   0,  NO, 0.5
    4, 128,   0, 128,  255,   0,   0,    0, 255,   0,  NO, 0.5
    5, 128,   0, 128,  255,   0,   0,    0, 255,   0,  NO, 0.5
    6, 128,   0, 128,  255,   0,   0,    0, 255,   0,  NO, 0.5
    7, 128,   0, 128,  255,   0,   0,    0, 255,   0,  NO, 0.5
    8, 128,   0, 128,  255,   0,   0,    0, 255,   0,  NO, 0.5
    9, 128,   0, 128,  255,   0,   0,    0, 255,   0,  NO, 0.5
   10, 128,   0, 128,  255,   0,   0,    0, 255,   0,  NO, 0.5
   11, 128,   0, 128,  255,   0,   0,    0, 255,   0,  NO, 0.5
   12, 128,   0, 128,  255,   0,   0,    0, 255,   0,  NO, 0.5
   13, 128,   0, 128,  255,   0,   0,    0, 255,   0,  NO, 0.5
   14, 128,   0, 128,  255,   0,   0,    0, 255,   0,  NO, 0.5
   15, 128,   0, 128,  255,   0,   0,    0, 255,   0,  NO, 0.5
   16, 128,   0, 128,  255,   0,   0,    0, 255,   0,  NO, 0.5
   17, 128,   0, 128,  255,   0,   0,    0, 255,   0,  NO, 0.5
   18, 128,   0, 128,  255,   0,   0,    0, 255,   0,  NO, 0.5
   19, 128,   0, 128,  255,   0,   0,    0, 255,   0,  NO, 0.5
   22, 128,   0, 128,  255,   0,   0,    0, 255,   0,  NO, 0.5
   23, 128,   0, 128,  255,   0,   0,    0, 255,   0,  NO, 0.5
   24, 128,   0, 128,  255,   0,   0,    0, 255,   0,  NO, 0.5
   25, 128,   0, 128,  255,   0,   0,    0, 255,   0,  NO, 0.5
   26, 128,   0, 128,  255,   0,   0,    0, 255,   0,  NO, 0.5
   27, 128,   0, 128,  255,   0,   0,    0, 255,   0,  NO, 0.5
   28, 128,   0, 128,  255,   0,   0,    0, 255,   0,  NO, 0.5
   29, 128,   0, 128,  255,   0,   0,    0, 255,   0,  NO, 0.5
   30, 128,   0, 128,  255,   0,   0,    0, 255,   0,  NO, 0.5
   31, 128,   0, 128,  255,   0,   0,    0, 255,   0,  NO, 0.5
   32, 128,   0, 128,  255,   0,   0,    0, 255,   0,  NO, 0.5
   33, 128,   0, 128,  255,   0,   0,    0, 255,   0,  NO, 0.5
   34, 128,   0, 128,  255,   0,   0,    0, 255,   0,  NO, 0.5
   35, 128,   0, 128,  255,   0,   0,    0, 255,   0,  NO, 0.5
```

```
   36, 128,   0, 128,  255,   0,   0,    0, 255,   0,  NO, 0.5
   37, 128,   0, 128,  255,   0,   0,    0, 255,   0,  NO, 0.5
   38, 128,   0, 128,  255,   0,   0,    0, 255,   0,  NO, 0.5
  100, 128,   0, 128,  255,   0,   0,    0, 255,   0,  NO, 0.5
  101, 128,   0, 128,  255,   0,   0,    0, 255,   0,  NO, 0.5
  102, 128,   0, 128,  255,   0,   0,    0, 255,   0,  NO, 0.5
  103, 128,   0, 128,  255,   0,   0,    0, 255,   0,  NO, 0.5
  104, 128,   0, 128,  255,   0,   0,    0, 255,   0,  NO, 0.5
  105, 128,   0, 128,  255,   0,   0,    0, 255,   0,  NO, 0.5
  106, 128,   0, 128,  255,   0,   0,    0, 255,   0,  NO, 0.5
  107, 128,   0, 128,  255,   0,   0,    0, 255,   0,  NO, 0.5
  108, 128,   0, 128,  255,   0,   0,    0, 255,   0,  NO, 0.5
  109, 128,   0, 128,  255,   0,   0,    0, 255,   0,  NO, 0.5
  110, 128,   0, 128,  255,   0,   0,    0, 255,   0,  NO, 0.5
  111, 128,   0, 128,  255,   0,   0,    0, 255,   0,  NO, 0.5
  112, 128,   0, 128,  255,   0,   0,    0, 255,   0,  NO, 0.5
  113, 128,   0, 128,  255,   0,   0,    0, 255,   0,  NO, 0.5
  114, 128,   0, 128,  255,   0,   0,    0, 255,   0,  NO, 0.5
  115, 128,   0, 128,  255,   0,   0,    0, 255,   0,  NO, 0.5
  116, 128,   0, 128,  255,   0,   0,    0, 255,   0,  NO, 0.5
  117, 128,   0, 128,  255,   0,   0,    0, 255,   0,  NO, 0.5
  118, 128,   0, 128,  255,   0,   0,    0, 255,   0,  NO, 0.5
  119, 128,   0, 128,  255,   0,   0,    0, 255,   0,  NO, 0.5
  120, 128,   0, 128,  255,   0,   0,    0, 255,   0,  NO, 0.5
  121, 128,   0, 128,  255,   0,   0,    0, 255,   0,  NO, 0.5
  122, 128,   0, 128,  255,   0,   0,    0, 255,   0,  NO, 0.5
  700, 128,   0, 128,  255,   0,   0,    0, 255,   0,  NO, 0.5
  701, 128,   0, 128,  255,   0,   0,    0, 255,   0,  NO, 0.5
  702, 128,   0, 128,  255,   0,   0,    0, 255,   0,  NO, 0.5
  703, 128,   0, 128,  255,   0,   0,    0, 255,   0,  NO, 0.5
  704, 128,   0, 128,  255,   0,   0,    0, 255,   0,  NO, 0.5
  707, 128,   0, 128,  255,   0,   0,    0, 255,   0,  NO, 0.5
  708, 128,   0, 128,  255,   0,   0,    0, 255,   0,  NO, 0.5
  709, 128,   0, 128,  255,   0,   0,    0, 255,   0,  NO, 0.5
  710, 128,   0, 128,  255,   0,   0,    0, 255,   0,  NO, 0.5
  711, 128,   0, 128,  255,   0,   0,    0, 255,   0,  NO, 0.5
  712, 128,   0, 128,  255,   0,   0,    0, 255,   0,  NO, 0.5
 1000, 128,   0, 128,  255,   0,   0,    0, 255,   0,  NO, 0.5

*SECT-SCALE    ; Section Stiffness Scale Factor
; iSEC, AREA SF, ASY SF, ASZ SF, IXX SF, IYY_SF, IZZ_SF, WGT_SF, GROUP, iPart ; line 1
  703, 1, 100, 100, 1, 100, 100, 1, , 1
  704, 1, 1, 1, 1, 1, 1, 0.001, , 1

*DGN-SECT
; iSEC, TYPE, SNAME, [OFFSET], bSD, bWE, SHAPE, [DATA1], [DATA2]                    ;
1st line - DB/USER
; iSEC, TYPE, SNAME, [OFFSET], bSD, bWE, SHAPE, BLT, D1, ..., D8, iCEL               ;
1st line - VALUE
;       AREA, ASy, ASz, Ixx, Iyy, Izz                                                ;
2nd line
;       CyP, CyM, CzP, CzM, QyB, QzB, PERI_OUT, PERI_IN, Cy, Cz                      ;
3rd line
;       Y1, Y2, Y3, Y4, Z1, Z2, Z3, Z4, Zyy, Zzz                                     ;
4th line
; iSEC, TYPE, SNAME, [OFFSET], bSD, bWE, SHAPE, ELAST, DEN, POIS, POIC, SF, THERMAL ;
1st line - SRC
;       D1, D2, [SRC]                                                                ;
2nd line
; iSEC, TYPE, SNAME, [OFFSET], bSD, bWE, SHAPE, 1, DB, NAME1, NAME2, D1, D2          ;
1st line - COMBINED
; iSEC, TYPE, SNAME, [OFFSET], bSD, bWE, SHAPE, 2, D11, D12, D13, D14, D15, D21, D22,
```

```
D23, D24
; iSEC, TYPE, SNAME, [OFFSET2], bSD, bWE, SHAPE, iyVAR, izVAR, STYPE                ;
1st line - TAPERED
;       DB, NAME1, NAME2                                                            ;
2nd line(STYPE=DB)
;       [DIM1], [DIM2]                                                              ;
2nd line(STYPE=USER)
;       D11, D12, D13, D14, D15, D16, D17, D18                                      ;
2nd line(STYPE=VALUE)
;       AREA1, ASy1, ASz1, Ixx1, Iyy1, Izz1                                         ;
3rd line(STYPE=VALUE)
;       CyP1, CyM1, CzP1, CzM1, QyB1, QzB1, PERI_OUT1, PERI_IN1, Cy1, Cz1           ;
4th line(STYPE=VALUE)
;       Y11, Y12, Y13, Y14, Z11, Z12, Z13, Z14, Zyy1, Zyy2                          ;
5th line(STYPE=VALUE)
;       D21, D22, D23, D24, D25, D26, D27, D28                                      ;
6th line(STYPE=VALUE)
;       AREA2, ASy2, ASz2, Ixx2, Iyy2, Izz2                                         ;
7th line(STYPE=VALUE)
;       CyP2, CyM2, CzP2, CzM2, QyB2, QzB2, PERI_OUT2, PERI_IN2, Cy2, Cz2           ;
8th line(STYPE=VALUE)
;       Y21, Y22, Y23, Y24, Z21, Z22, Z23, Z24, Zyy2, Zzz2                          ;
9th line(STYPE=VALUE)
; iSEC, TYPE, SNAME, [OFFSET], bSD, bWE, SHAPE                                      ;
1st line - COMPOSITE-B
;       Hw, tw, B1, Bf1, tf1, B2, Bf2, tf2                                          ;
2nd line
;       [SHAPE-NUM], [STIFF-SHAPE], [STIFF-POS] (1~4)                               ;
3rd line
;       SW, GN, CTC, Bc, Tc, Hh, EsEc, DsDc, Ps, Pc, TsTc, bMulti, Elong, Esh       ;
4th line
; iSEC, TYPE, SNAME, [OFFSET], bSD, bWE, SHAPE                                      ;
1st line - COMPOSITE-I
;       Hw, tw, B1, tf1, B2, tf2                                                    ;
2nd line
;       [SHAPE-NUM], [STIFF-SHAPE], [STIFF-POS] (1~2)                               ;
3rd line
;       SW, GN, CTC, Bc, Tc, Hh, EsEc, DsDc, Ps, Pc, TsTc, bMulti, Elong, Esh       ;
4th line
; iSEC, TYPE, SNAME, [OFFSET], bSD, bWE, SHAPE                                      ;
1st line - COMPOSITE-TUB
;       Hw, tw, B1, Bf1, tf1, B2, Bf2, tf2, Bf3, tfp                                ;
2nd line
;       [SHAPE-NUM], [STIFF-SHAPE], [STIFF-POS] (1~3)                               ;
3rd line
;       SW, GN, CTC, Bc, Tc, Hh, EsEc, DsDc, Ps, Pc, TsTc, bMulti, Elong, Esh       ;
4th line
; [DATA1] : 1, DB, NAME or 2, D1, D2, D3, D4, D5, D6, D7, D8, D9, D10
; [DATA2] : CCSHAPE or iCEL or iN1, iN2
; [SRC]  : 1, DB, NAME1, NAME2 or 2, D1, D2, D3, D4, D5, D6, D7, D8, D9, D10, iN1, iN2

; [DIM1], [DIM2] : D1, D2, D3, D4, D5, D6, D7, D8
; [OFFSET] : OFFSET, iCENT, iREF, iHORZ, HUSER, iVERT, VUSER
; [OFFSET2]: OFFSET, iCENT, iREF, iHORZ, HUSERI, HUSERJ, iVERT, VUSERI, VUSERJ
; [SHAPE-NUM]: SHAPE-NUM, POS, STIFF-NUM1, STIFF-NUM2, STIFF-NUM3, STIFF-NUM4
; [STIFF-SHAPE]: SHAPE-NUM, for(SHAPE-NUM) { NAME, SIZE1~8 }
; [STIFF-POS]: STIFF-NUM, for(STIFF-NUM) { SPACING, iSHAPE, bCALC }
    1, DBUSER    , L0_X1             , CC, 0, 0, 0, 0, 0, 0, YES, NO, SB , 2, 1.93, 0.
36, 0, 0, 0, 0, 0, 0, 0, 0
    2, DBUSER    , L0_X2             , CC, 0, 0, 0, 0, 0, 0, YES, NO, SB , 2, 0.65, 0.
36, 0, 0, 0, 0, 0, 0, 0, 0
    3, DBUSER    , L0_X2bis          , CC, 0, 0, 0, 0, 0, 0, YES, NO, SB , 2, 1.225, 0
```

```
.36, 0, 0, 0, 0, 0, 0, 0, 0
    4, DBUSER    , L0_X3            , CC, 0, 0, 0, 0, 0, 0, YES, NO, SB , 2, 1.83, 0.
36, 0, 0, 0, 0, 0, 0, 0, 0
    5, DBUSER    , L0_X4            , CC, 0, 0, 0, 0, 0, 0, YES, NO, SB , 2, 1.25, 0.
36, 0, 0, 0, 0, 0, 0, 0, 0
    6, DBUSER    , L0_X5            , CC, 0, 0, 0, 0, 0, 0, YES, NO, SB , 2, 0.47, 0.
36, 0, 0, 0, 0, 0, 0, 0, 0
    7, DBUSER    , L0_X6            , CC, 0, 0, 0, 0, 0, 0, YES, NO, SB , 2, 4.68, 0.
25, 0, 0, 0, 0, 0, 0, 0, 0
    8, DBUSER    , L0_X7            , CC, 0, 0, 0, 0, 0, 0, YES, NO, SB , 2, 1.53, 0.
25, 0, 0, 0, 0, 0, 0, 0, 0
    9, DBUSER    , L0_X8            , CC, 0, 0, 0, 0, 0, 0, YES, NO, SB , 2, 1.75, 0.
25, 0, 0, 0, 0, 0, 0, 0, 0
   10, DBUSER    , L0_X9            , CC, 0, 0, 0, 0, 0, 0, YES, NO, SB , 2, 1.33, 0.
25, 0, 0, 0, 0, 0, 0, 0, 0
   11, DBUSER    , L0_X10           , CC, 0, 0, 0, 0, 0, 0, YES, NO, SB , 2, 0.78, 0.
36, 0, 0, 0, 0, 0, 0, 0, 0
   12, DBUSER    , L0_X11           , CC, 0, 0, 0, 0, 0, 0, YES, NO, SB , 2, 2.95, 0.
36, 0, 0, 0, 0, 0, 0, 0, 0
   13, DBUSER    , L0_X12           , CC, 0, 0, 0, 0, 0, 0, YES, NO, SB , 2, 1.63, 0.
36, 0, 0, 0, 0, 0, 0, 0, 0
   14, DBUSER    , L0_X13           , CC, 0, 0, 0, 0, 0, 0, YES, NO, SB , 2, 0.75, 0.
25, 0, 0, 0, 0, 0, 0, 0, 0
   15, DBUSER    , L0_X14           , CC, 0, 0, 0, 0, 0, 0, YES, NO, SB , 2, 4.47, 0.
25, 0, 0, 0, 0, 0, 0, 0, 0
   16, DBUSER    , L0_X15           , CC, 0, 0, 0, 0, 0, 0, YES, NO, SB , 2, 4.83, 0.
25, 0, 0, 0, 0, 0, 0, 0, 0
   17, DBUSER    , L0_X16           , CC, 0, 0, 0, 0, 0, 0, YES, NO, SB , 2, 0.3, 0.3
6, 0, 0, 0, 0, 0, 0, 0, 0
   18, DBUSER    , L0_X17           , CC, 0, 0, 0, 0, 0, 0, YES, NO, SB , 2, 0.5, 0.3
6, 0, 0, 0, 0, 0, 0, 0, 0
   19, DBUSER    , L0_X18           , CC, 0, 0, 0, 0, 0, 0, YES, NO, SB , 2, 0.65, 0.
36, 0, 0, 0, 0, 0, 0, 0, 0
   22, DBUSER    , L0_X21           , CC, 0, 0, 0, 0, 0, 0, YES, NO, SB , 2, 3.68, 0.
25, 0, 0, 0, 0, 0, 0, 0, 0
   23, DBUSER    , L0_X22           , CC, 0, 0, 0, 0, 0, 0, YES, NO, SB , 2, 1.6, 0.2
5, 0, 0, 0, 0, 0, 0, 0, 0
   24, DBUSER    , L0_X23           , CC, 0, 0, 0, 0, 0, 0, YES, NO, SB , 2, 3.77, 0.
25, 0, 0, 0, 0, 0, 0, 0, 0
   25, DBUSER    , L0_X24           , CC, 0, 0, 0, 0, 0, 0, YES, NO, SB , 2, 0.95, 0.
25, 0, 0, 0, 0, 0, 0, 0, 0
   26, DBUSER    , L0_X25           , CC, 0, 0, 0, 0, 0, 0, YES, NO, SB , 2, 6.45, 0.
25, 0, 0, 0, 0, 0, 0, 0, 0
   27, DBUSER    , L0_X26           , CC, 0, 0, 0, 0, 0, 0, YES, NO, SB , 2, 4.83, 0.
25, 0, 0, 0, 0, 0, 0, 0, 0
   28, DBUSER    , L0_X27           , CC, 0, 0, 0, 0, 0, 0, YES, NO, SB , 2, 0.97, 0.
36, 0, 0, 0, 0, 0, 0, 0, 0
   29, DBUSER    , L0_X28           , CC, 0, 0, 0, 0, 0, 0, YES, NO, SB , 2, 1.19, 0.
36, 0, 0, 0, 0, 0, 0, 0, 0
   30, DBUSER    , L0_X29           , CC, 0, 0, 0, 0, 0, 0, YES, NO, SB , 2, 1, 0.36,
 0, 0, 0, 0, 0, 0, 0, 0
   31, DBUSER    , L0_X30           , CC, 0, 0, 0, 0, 0, 0, YES, NO, SB , 2, 0.29, 0.
36, 0, 0, 0, 0, 0, 0, 0, 0
   32, DBUSER    , L0_X31           , CC, 0, 0, 0, 0, 0, 0, YES, NO, SB , 2, 0.19, 0.
36, 0, 0, 0, 0, 0, 0, 0, 0
   33, DBUSER    , L0_X32           , CC, 0, 0, 0, 0, 0, 0, YES, NO, SB , 2, 0.29, 0.
36, 0, 0, 0, 0, 0, 0, 0, 0
   34, DBUSER    , L0_X33           , CC, 0, 0, 0, 0, 0, 0, YES, NO, SB , 2, 1.29, 0.
36, 0, 0, 0, 0, 0, 0, 0, 0
   35, DBUSER    , L0_X33bis        , CC, 0, 0, 0, 0, 0, 0, YES, NO, SB , 2, 0.95, 0.
36, 0, 0, 0, 0, 0, 0, 0, 0
   36, DBUSER    , L0_X34           , CC, 0, 0, 0, 0, 0, 0, YES, NO, SB , 2, 1.55, 0.
```

```
36, 0, 0, 0, 0, 0, 0, 0, 0
   37, DBUSER    , L0_X35            , CC, 0, 0, 0, 0, 0, 0, YES, NO, SB , 2, 6.35, 0.
36, 0, 0, 0, 0, 0, 0, 0, 0
   38, DBUSER    , L0_X22bis         , CC, 0, 0, 0, 0, 0, 0, YES, NO, SB , 2, 1.28, 0.
25, 0, 0, 0, 0, 0, 0, 0, 0
  100, DBUSER    , L0_Y01            , CC, 0, 0, 0, 0, 0, 0, YES, NO, SB , 2, 7.4, 0.3
6, 0, 0, 0, 0, 0, 0, 0, 0
  101, DBUSER    , L0_Y02            , CC, 0, 0, 0, 0, 0, 0, YES, NO, SB , 2, 1.62, 0.
25, 0, 0, 0, 0, 0, 0, 0, 0
  102, DBUSER    , L0_Y02bis         , CC, 0, 0, 0, 0, 0, 0, YES, NO, SB , 2, 2.18, 0.
25, 0, 0, 0, 0, 0, 0, 0, 0
  103, DBUSER    , L0_Y02tris        , CC, 0, 0, 0, 0, 0, 0, YES, NO, SB , 2, 3.55, 0.
25, 0, 0, 0, 0, 0, 0, 0, 0
  104, DBUSER    , L0_Y03            , CC, 0, 0, 0, 0, 0, 0, YES, NO, SB , 2, 1.54, 0.
36, 0, 0, 0, 0, 0, 0, 0, 0
  105, DBUSER    , L0_Y04            , CC, 0, 0, 0, 0, 0, 0, YES, NO, SB , 2, 1.2, 0.3
6, 0, 0, 0, 0, 0, 0, 0, 0
  106, DBUSER    , L0_Y04bis         , CC, 0, 0, 0, 0, 0, 0, YES, NO, SB , 2, 0.59, 0.
36, 0, 0, 0, 0, 0, 0, 0, 0
  107, DBUSER    , L0_Y05            , CC, 0, 0, 0, 0, 0, 0, YES, NO, SB , 2, 1.25, 0.
25, 0, 0, 0, 0, 0, 0, 0, 0
  108, DBUSER    , L0_Y06            , CC, 0, 0, 0, 0, 0, 0, YES, NO, SB , 2, 1.15, 0.
36, 0, 0, 0, 0, 0, 0, 0, 0
  109, DBUSER    , L0_Y07            , CC, 0, 0, 0, 0, 0, 0, YES, NO, SB , 2, 1.18, 0.
25, 0, 0, 0, 0, 0, 0, 0, 0
  110, DBUSER    , L0_Y08            , CC, 0, 0, 0, 0, 0, 0, YES, NO, SB , 2, 2.75, 0.
36, 0, 0, 0, 0, 0, 0, 0, 0
  111, DBUSER    , L0_Y09            , CC, 0, 0, 0, 0, 0, 0, YES, NO, SB , 2, 6.43, 0.
25, 0, 0, 0, 0, 0, 0, 0, 0
  112, DBUSER    , L0_Y10            , CC, 0, 0, 0, 0, 0, 0, YES, NO, SB , 2, 6.43, 0.
25, 0, 0, 0, 0, 0, 0, 0, 0
  113, DBUSER    , L0_Y11            , CC, 0, 0, 0, 0, 0, 0, YES, NO, SB , 2, 6.43, 0.
36, 0, 0, 0, 0, 0, 0, 0, 0
  114, DBUSER    , L0_Y12            , CC, 0, 0, 0, 0, 0, 0, YES, NO, SB , 2, 0.84, 0.
36, 0, 0, 0, 0, 0, 0, 0, 0
  115, DBUSER    , L0_Y13            , CC, 0, 0, 0, 0, 0, 0, YES, NO, SB , 2, 0.83, 0.
25, 0, 0, 0, 0, 0, 0, 0, 0
  116, DBUSER    , L0_Y14            , CC, 0, 0, 0, 0, 0, 0, YES, NO, SB , 2, 2.55, 0.
36, 0, 0, 0, 0, 0, 0, 0, 0
  117, DBUSER    , L0_Y14bis         , CC, 0, 0, 0, 0, 0, 0, YES, NO, SB , 2, 4.11, 0.
25, 0, 0, 0, 0, 0, 0, 0, 0
  118, DBUSER    , L0_Y15            , CC, 0, 0, 0, 0, 0, 0, YES, NO, SB , 2, 1.37, 0.
36, 0, 0, 0, 0, 0, 0, 0, 0
  119, DBUSER    , L0_Y16            , CC, 0, 0, 0, 0, 0, 0, YES, NO, SB , 2, 5.61, 0.
36, 0, 0, 0, 0, 0, 0, 0, 0
  120, DBUSER    , L0_Y17            , CC, 0, 0, 0, 0, 0, 0, YES, NO, SB , 2, 4.69, 0.
25, 0, 0, 0, 0, 0, 0, 0, 0
  121, DBUSER    , L0_Y17bis         , CC, 0, 0, 0, 0, 0, 0, YES, NO, SB , 2, 1.35, 0.
25, 0, 0, 0, 0, 0, 0, 0, 0
  122, DBUSER    , L0_Y18            , CC, 0, 0, 0, 0, 0, 0, YES, NO, SB , 2, 1.79, 0.
36, 0, 0, 0, 0, 0, 0, 0, 0
  700, DBUSER    , Pilastro fitt     , CC, 0, 0, 0, 0, 0, 0, YES, NO, SB , 2, 0.248, 0
.248, 0, 0, 0, 0, 0, 0, 0, 0
  701, DBUSER    , cordolo 40x21     , CC, 0, 0, 0, 0, 0, 0, YES, NO, SB , 2, 0.21, 0.
4, 0, 0, 0, 0, 0, 0, 0, 0
  702, DBUSER    , cordolo 30x21     , CC, 0, 0, 0, 0, 0, 0, YES, NO, SB , 2, 0.21, 0.
3, 0, 0, 0, 0, 0, 0, 0, 0
  703, DBUSER    , cordolo RIGID     , CC, 0, 0, 0, 0, 0, 0, YES, NO, SB , 2, 0.2, 0.4
, 0, 0, 0, 0, 0, 0, 0, 0
  704, DBUSER    , cordolo fitt      , CC, 0, 0, 0, 0, 0, 0, YES, NO, SB , 2, 0.2, 0.2
5, 0, 0, 0, 0, 0, 0, 0, 0
  707, DBUSER    , Pilastro 50x25    , CC, 0, 0, 0, 0, 0, 0, YES, NO, SB , 2, 0.5, 0.2
```

```
5, 0, 0, 0, 0, 0, 0, 0, 0
  708, DBUSER    , Trave             , CC, 0, 0, 0, 0, 0, 0, YES, NO, SB , 2, 0.25, 0.
55, 0, 0, 0, 0, 0, 0, 0, 0
  709, DBUSER    , Fascia 0.60x0.36  , CC, 0, 0, 0, 0, 0, 0, YES, NO, SB , 2, 0.6, 0.3
6, 0, 0, 0, 0, 0, 0, 0, 0
  710, DBUSER    , Fascia 1.45x0.25  , CC, 0, 0, 0, 0, 0, 0, YES, NO, SB , 2, 1.45, 0.
25, 0, 0, 0, 0, 0, 0, 0, 0
  711, DBUSER    , Fascia 0.95x0.25  , CC, 0, 0, 0, 0, 0, 0, YES, NO, SB , 2, 0.95, 0.
25, 0, 0, 0, 0, 0, 0, 0, 0
  712, DBUSER    , Fascia 0.45x0.36  , CC, 0, 0, 0, 0, 0, 0, YES, NO, SB , 2, 0.45, 0.
36, 0, 0, 0, 0, 0, 0, 0, 0
 1000, DBUSER    , LINE              , CC, 0, 0, 0, 0, 0, 0, YES, NO, SB , 2, 0.01, 0.
01, 0, 0, 0, 0, 0, 0, 0, 0

*STLDCASE    ; Static Load Cases
; LCNAME, LCTYPE, DESC
   PP   , D ,
   G1+G2 copertura A, D ,
   G1+G2 copertura B, D ,
   Q sottotetto, L ,
   sporto gronda, D ,
   Q neve, L ,
   SISMA X, E ,
   SISMA Y, E ,
   travi, D ,
   parapetto, D ,
   muro , D ,


*STORY    ; Story
;  NAME=NAME, LEVEL, bFLDIAP, WINDWX, WINDWY, WINDCX, WINDCY, ECCX, ECCY, IECCX, IECCY
, TAFX, TAFY, WTAFX, WTAFY, AreaPosNum ; line 1
;       AreaPosX1, AreaPosY1, AreaPosZ1, ...
                                        ; from line 2
   NAME=1F, -1, NO , 0, 8.265, 3.7, 16.4675, 0, 0.41325, 0, 0, 1, 1, 0, 1.23975, 0
   NAME=Roof, 3.35, YES, 0, 8.265, 3.7, 16.4675, 0, 0.41325, 0, 0, 1, 1, 0, 1.23975, 0


*STORY-CHANGED-INFO    ; Story Changed Information
; iCHANGEDINFO
 0

*STORY-ECCEN    ; Story Eccentricity
; bIncludeEccSeis, bIncludeEccWind, EccSeis, EccWind
 YES, YES, 5, 15

*DGN-CONC    ; Concrete Design Code
; CODE=CODE, RHOC, RHOR, RHOW, MRF, SHR-RATIO { , METHOD, A1, A2, A2_COLM, bSCWB }
 ; line 1
; [ACI318-89]     : bSPECIAL, PHI-B, PHI-T, PHIC1, PHI-C2, PHI-V
 ; line 2
; [ACI318-95]     : bSPECIAL, PHI-B, PHI-T, PHIC1, PHI-C2, PHI-V
 ; line 2
; [ACI318-99]     : bSPECIAL, PHI-B, PHI-T, PHIC1, PHI-C2, PHI-V
 ; line 2
; [ACI318-02]     : bSPECIAL, PHI-B, PHI-T, PHIC1, PHI-C2, PHI-V, TLF, SLF, TSLCB
 ; line 2
; [ACI318-05]     : bSPECIAL, PHI-B, PHI-T, PHIC1, PHI-C2, PHI-V, TLF, SLF, TSLCB
 ; line 2
; [ACI318-08]     : bSPECIAL, PHI-B, PHI-T, PHIC1, PHI-C2, PHI-V, TLF, SLF, TSLCB, SPW
ALL, BNDR-MTHD, CD, IE, FRMTYPE, 2NDGRUP, RHOS, bTOR, TRFT; line 2
; [ACI318-11]     : bCHEKCBEAM, bSPECIAL, PHI-B, PHI-T, PHIC1, PHI-C2, PHI-V, TLF, SLF
```

```
, TSLCB, SPWALL, BNDR-MTHD, CD, IE, FRMTYPE, 2NDGRUP, RHOS, bTOR, TRFT; line 2
; [ACI318-14]      : bCHEKCBEAM, bSPECIAL, PHI-B, PHI-T, PHIC1, PHI-C2, PHI-V, TLF, SLF
, TSLCB, SPWALL, BNDR-MTHD, CD, IE, FRMTYPE, 2NDGRUP, RHOS, bTOR, TRFT, bBC-JOINT; lin
e 2
; [ACI318M-14]     : bCHEKCBEAM, bSPECIAL, PHI-B, PHI-T, PHIC1, PHI-C2, PHI-V, TLF, SLF
, TSLCB, SPWALL, BNDR-MTHD, CD, IE, FRMTYPE, 2NDGRUP, RHOS, bTOR, TRFT, bBC-JOINT; lin
e 2
; [NSR-10]         : bCHEKCBEAM, bSPECIAL, PHI-B, PHI-T, PHIC1, PHI-C2, PHI-V, TLF, SLF
, TSLCB, SPWALL, BNDR-MTHD, CD, IE, FRMTYPE, 2NDGRUP, RHOS, bBC-JOINT; line 2
; [AIK-USD94]      : bSPECIAL, PHI-B, PHI-T, PHIC1, PHI-C2, PHI-V
 ; line 2
; [TWN-USD92]      : bSPECIAL, PHI-B, PHI-T, PHIC1, PHI-C2, PHI-V, bTOR, TRFT, SCWB
 ; line 2
; [TWN-USD100]     : bSPECIAL, PHI-B, PHI-T, PHIC1, PHI-C2, PHI-V, bTOR, TRFT, SCWB
 ; line 2
; [KCI-USD99]      : bSPECIAL, PHI-B, PHI-T, PHIC1, PHI-C2, PHI-V, TLF, SLF, TSLCB
 ; line 2
; [KCI-USD03]      : bSPECIAL, PHI-B, PHI-T, PHIC1, PHI-C2, PHI-V, TLF, SLF, TSLCB
 ; line 2
; [KCI-USD07]      : bSPECIAL, PHI-B, PHI-T, PHIC1, PHI-C2, PHI-V, TLF, SLF, TSLCB, SPW
ALL, BNDR-MTHD, CD, IE, FRMTYPE, 2NDGRUP, bTOR, TRFT; line 2
; [KCI-USD12]      : bSPECIAL, PHI-B, PHI-T, PHIC1, PHI-C2, PHI-V, TLF, SLF, TSLCB, SPW
ALL, BNDR-MTHD, CD, IE, EXPOSURE, FRMTYPE, 2NDGRUP, bTOR, TRFT; line 2
; [BS8110-97]      : GAMMA-MC, GAMMA-MS, GAMMA-MV
 ; line 2
; [EUROCODE2]      : GAMMA-CF, GAMMA-CA, GAMMA-SF, GAMMA-SA, iSCODE
 ; line 2
; [EUROCODE2:04]   : GAMMA-CF, GAMMA-CA, GAMMA-SF, GAMMA-SA, ALPHACC, iSCODE,
 ; line 2
;                    bRULE, WEAK-FACT, iDUC, GAMMA-RD-B, GAMMA-RD-C, S-GRUP
 ; line 2
;                    FRAMETYPE, AUA1, SPLCK, SOILFACTOR, TB, TC, TD, AGR, I, DAMPINGRAT
, BCJOINT, NTC2008, UF, GAMMA-RD-W, GAMMA-RD-J ; line 2
;                    STRUT-ANG, bBEHAVIOR-FACT, BEHAVIOR-FACT-VALUE, iNTC, bVCWALL, bVC
COLM, dPHIEF, bAUTOA, bAUTOC, A, B, C, bTOR    ; line 2
;                    bSHELL, dSHELLHORIZ, DSHELLVERT    ; line 2
; [EUROCODE2-2:05]: GAMMA-CF, GAMMA-CA, GAMMA-SF, GAMMA-SA, GAMMA_CL, GAMMA_SL, ALPHAC
C, iSCODE, STRUT-ANG,; line 2
;                    bSHELL, dSHELLHORIZ, DSHELLVERT    ; line 2
; [IS456:2000]     : bSPECIAL, GAMMA-C, GAMMA-S, FOS, SubRex
 ; line 2
; [GB50010-02]     : bSPECIAL, GAMMA-C, GAMMA-S, KIND, iSlabType
 ; line 2
; [GB50010-10]     : bSPECIAL, GAMMA-C, GAMMA-S, KIND, iSlabType, bTOR, TRFT
 ; line 2
; [CSA-A23.3-94]   : bSPECIAL, PHI-C, PHI-S, PHI-M
 ; line 2
; [AIK-WSD2K]      : bSPECIAL
 ; line 2
; [AIJ-WSD99]      : bSPECIAL, KIND
 ; line 2
; [AASHTO-LRFD12] : bSPECIAL, PHI-B, PHI-T, PHI-C1, PHI-C2, PHI-V, KIND
 ; line 2
; [AASHTO-LRFD02] : bSPECIAL, PHI-B, PHI-T, PHI-C1, PHI-C2, PHI-V, KIND
 ; line 2
; [AASHTO-LFD96]  : bSPECIAL, PHI-B, PHI-T, PHI-C1, PHI-C2, PHI-V
 ; line 2
; [KSCE-USD05]     : bSPECIAL, PHI-B, PHI-T, PHI-C1, PHI-C2, PHI-V
 ; line 2
; [KSCE-USD96]     : bSPECIAL, PHI-B, PHI-T, PHI-C1, PHI-C2, PHI-V
 ; line 2
; [KSCE-RAIL-USE04] : bSPECIAL, PHI-B, PHI-T, PHI-C1, PHI-C2, PHI-V
```

```
 ; line 2
; [TWN-BRG-LSD90] : bSPECIAL, PHI-B, PHI-T, PHI-C1, PHI-C2, PHI-V
 ; line 2
; [JTJ023-85]     : GAMMA-C, GAMMA-S, KIND
 ; line 2
; [CSA-S6-00]     : bSPECIAL, PHI-C, PHI-S, KIND
 ; line 2
; [CSA-S6-14]     : bSPECIAL, PHI-C, PHI-S, KIND
 ; line 2
; [IRC:21-2000]   : GAMMA-C, GAMMA-S
 ; line 2
; [SNiP 2.05.03-84*]  : nBRIDGE, bmb7mb8, mb7mb8Type, mb7, mb8, bmb9, mb9Type, mb9
 ; line 2
; [SP 35.13330.2011]  : nBRIDGE, bmb7mb8, mb7mb8Type, mb7, mb8, bmb9, mb9Type, mb9
 ; line 2
; Member Check    : bBEAM, bCOLM, bBRCE, bWALL, bSLAB, bMAT, bRBEAM, bRCOLM, bRBRCE, b
RWALL, bRSLAB, bRMAT, bSBEAM, bCANTIL, bUNDER-BM/COLM
   CODE=Eurocode2:04, 0, 0, 0, 1, 0, , , , ,
   1.5, 1.2, 1.15, 1, 0.85, 0, NO, 1.3, 0, 1.2, 1.3, , 0, 1.1, 0, 1.2, 0.15, 0.5, 2, 0
.08, 1, 5, NO, 0, YES, 0.6, 1.2, 1.2, 45, NO, 1.5, 2, NO, NO, 2.14, NO, YES, 0.7, 1.1,
 1, NO, NO, 0, 0
   YES, YES, YES, YES, YES, YES, YES, YES, YES, YES, YES, YES, YES, YES, YES, 0

*CONSTRAINT    ; Supports
; NODE_LIST, CONST(Dx,Dy,Dz,Rx,Ry,Rz), GROUP
   89 90 249, 111111,

*REBAR-COLUMN    ; Modify Column Rebar Data
; iSEC, iSUBSEC, HOOP, RBNAME, bUseCornerRB, CornerRBNAME, iNQRB, iNROW, DO, SRBNAME,
SPACE, iSRBN1, iSRBN2, iBHJRN, SRBNAME_C, SPACE_C, iSRBN1_C, iSRBN2_C, bSameRebar
  707,    0, TIED, P14, NO, P14, 6, 3, 0.03, P8, 0.25, 2, 2, 0, P8, 0.25, 2, 2, YES

*FRAME-RLS    ; Beam End Release
; ELEM_LIST, bVALUE, FLAG-i, Fxi, Fyi, Fzi, Mxi, Myi, Mzi        ; 1st line
;                    FLAG-j, Fxj, Fyj, Fzj, Mxj, Myj, Mzj, GROUP ; 2nd line
    14,  NO, 000001, 0, 0, 0, 0, 0, 0
             000000, 0, 0, 0, 0, 0, 0,
    15,  NO, 000001, 0, 0, 0, 0, 0, 0
             000000, 0, 0, 0, 0, 0, 0,
    16,  NO, 000001, 0, 0, 0, 0, 0, 0
             000000, 0, 0, 0, 0, 0, 0,
  6038,  NO, 000010, 0, 0, 0, 0, 0, 0
             000000, 0, 0, 0, 0, 0, 0,
  6046,  NO, 000000, 0, 0, 0, 0, 0, 0
             000010, 0, 0, 0, 0, 0, 0,
  6057,  NO, 000010, 0, 0, 0, 0, 0, 0
             000010, 0, 0, 0, 0, 0, 0,

*LOADTOMASS    ; Load to Mass
; DIR, bNODAL, bBEAM, bFLOOR, bPRES, GRAV
; LCNAME1, FACTOR1, LCNAME2, FACTOR2, ...   ; from line 1
   XY, YES, YES, YES, YES, 9.806
   PP, 1, G1+G2 copertura A, 3.7, Q sottotetto, 0.3, sporto gronda, 2, travi, 3
   parapetto, 1.5, muro, 4.6

*USE-STLD, PP

*SELFWEIGHT    ; Self Weight
; X, Y, Z, GROUP
0, 0, -1,

; End of data for load case [PP] -------------------------
```

```
*USE-STLD, sporto gronda

*BEAMLOAD    ; Element Beam Loads
; ELEM_LIST, CMD, TYPE, DIR, bPROJ, [ECCEN], [VALUE], GROUP
; ELEM_LIST, CMD, TYPE, TYPE, DIR, VX, VY, VZ, bPROJ, [ECCEN], [VALUE], GROUP
; [VALUE]       : D1, P1, D2, P2, D3, P3, D4, P4
; [ECCEN]       : bECCEN, ECCDIR, I-END, J-END, bJ-END
; [ADDITIONAL]  : bADDITIONAL, ADDITIONAL_I-END, ADDITIONAL_J-END, bADDITIONAL_J-END
  6038, BEAM   , UNILOAD, GZ, NO , NO, aDir[1], , , , 0, -1, 1, -1, 0, 0, 0, 0, , NO,
0, 0, NO,
  6046, BEAM   , UNILOAD, GZ, NO , NO, aDir[1], , , , 0, -1, 1, -1, 0, 0, 0, 0, , NO,
0, 0, NO,
  6057, BEAM   , UNILOAD, GZ, NO , NO, aDir[1], , , , 0, -1, 1, -1, 0, 0, 0, 0, , NO,
0, 0, NO,

; End of data for load case [sporto gronda] -------------------------

*USE-STLD, SISMA X

*SEIS    ; Static Seismic Loads
; CODE=CODE, SFX, SFY, ECCX, ECCY, bACC, bINH, DESC, SFZR
   ; line 1
; [KS1992]   : SPT, EA, IF, PAX, PAY, PCX, PCY, RMFX, RMFY
   ; line 2
; [UBC1991]  : SPT, ZF, IF, PAX, PAY, PCX, PCY, NCX, NCY
   ; line 2
; [UBC1997]  : SPT, ZF, SST, CD, IF, PX, PY, NCX, NCY, PAX, PAY
   ; line 2
; [ATC306]   : SPC, EPV, PAX, PAY, PCX, PCY, RMFX, RMFY
   ; line 2
; [KS2000]   : SPT, EA, IF, PAX, PAY, PCX, PCY, RMFX, RMFY
   ; line 2
; [JIS]      : SPT, EA, SF, PAX, PAY, PCX, PCY, RMFX, RMFY, [JIS-AI]
   ; line 2
; [IBC2000]  : SDC, SC, MS, M1, IF, PX, PY, PCX, PCY, RMFX, RMFY
   ; line 2
; [EURO1996] : S, QO, KD, KR, KW, ALPHA, FPX, FPY
   ; line 2
; [CH2002]   : NSC, SFI, SC, ST, DR, EQ, bMM, FPX, FPY
   ; line 2
; [CHSH2003] : SFI, SC, ST, DR, EQ, bMM, FPX, FPY
   ; line 2
; [NBC1995]  : ZVR, AZ, VZ, IF, FF, PAX, PAY, PCX, PCY, FMFX, FMFY
   ; line 2
; [IS2002]   : SZ, ST, IF, DAMP, FPX, FPY, RFX, RFY
   ; line 2
; [TAIWAN99] : SZ, ST, IF, SMF, PM, PAX, PAY, PApX, PApY, PFX, PFY, RMFX, RMFY
   ; line 2
; [KBC2005]  : RA, SZ(Sds), SC(Sd1), SUG, bCPR, IF, iP, PAX, PAY, PApX, PApY, RMFX, RM
FY ; line 2
; [TAIWAN06] : SZ, Sds, Sd1, Sms, Sm1,Nda, Ndv,Nma, Nmv, ST, Fda, Fdv, Fma, Fmv, SubZ,

;  Sds_t, Sms_t, Td0_t, Tm0_t, IF, ALPHA, PM, PAX, PAY, PApX, PApY, PFX, PFY, RMFX, RM
FY ; line 2
; [EURO2004] : iGR, iSPE, S, TB, TC, TD, AG, Q, LBF, IF, FPX, FPY,
   ; line 2
; [JIS-AI]   : bUSER, STORY1, XDIR1, YDIR1, STORY2, XDIR2, YDIR2, ...
; [KBC2009]  : SZ, ZF, SC, CU, FA, Fv, SDS, SD1, SUG, IF, ip, PAX, PAY, PApX, PApY, RM
FX, RMFY
; [TAIWAN11] : SZ, Sds, Sd1, Sms, Sm1,Nda, Ndv,Nma, Nmv, ST, Fda, Fdv, Fma, Fmv, SubZ,
```

```
;  Sds_t, Sms_t, Td0_t, Tm0_t, IF, ALPHA, PM, PAX, PAY, PApX, PApY, PFX, PFY, RMFX, RM
FY ; line 2
; [NTC2008]  : iGR, iSPE, S, TB, TC, TD, AG, Q, AMPF, Tc*, FPX, FPY,
   ; line 2
; [CH2010]   : NSC, SFI, SC, ST, DR, EQ, bMM, FPX, FPY
   ; line 2
; [IBC2009]  : SC, Ss, S1, Fa, Fv, Sds, Sd1, Cu, TL, OC, IF, iP, PAX, PAY, PApX, PApY,
 RMFX, RMFY ; line 2
; [IBC2012]  : SC, Ss, S1, Fa, Fv, Sds, Sd1, Cu, TL, RC, IF, iP, PAX, PAY, PApX, PApY,
 RMFX, RMFY ; line 2
; [NTC2012]  : iGR, iSPE, S, TB, TC, TD, AG, Q, AMPF, Tc*, FPX, FPY,
   ; line 2
; [P100_2013]: iSPE, TB, TC, TD, AG, Q, IF, FPX, FPY
   ; line 2
; [IS1893_2016]: Zone, Soil, IF, Damp, Peri.X, Peri.Y, RsRdFact_X, RsRdFact_Y
   ; line 2
; [NTC2018]  : iGR, iSPE, S, TB, TC, TD, AG, Q, AMPF, Tc*, FPX, FPY,
   ; line 2
; SSTORY1, ESTORY1, ADDX1, ADDY1, ...
   ; from line 3
   CODE=NTC2018, 1, 0, POS, POS, NO, NO, , 0
        2, 4, 1.427, 0.147, 0.44, 2.336, 0.184, 1, 2.47, 0.273, 0, 0

; End of data for load case [SISMA X] -------------------------

*USE-STLD, SISMA Y

*SEIS    ; Static Seismic Loads
; CODE=CODE, SFX, SFY, ECCX, ECCY, bACC, bINH, DESC, SFZR
   ; line 1
; [KS1992]   : SPT, EA, IF, PAX, PAY, PCX, PCY, RMFX, RMFY
   ; line 2
; [UBC1991]  : SPT, ZF, IF, PAX, PAY, PCX, PCY, NCX, NCY
   ; line 2
; [UBC1997]  : SPT, ZF, SST, CD, IF, PX, PY, NCX, NCY, PAX, PAY
   ; line 2
; [ATC306]   : SPC, EPV, PAX, PAY, PCX, PCY, RMFX, RMFY
   ; line 2
; [KS2000]   : SPT, EA, IF, PAX, PAY, PCX, PCY, RMFX, RMFY
   ; line 2
; [JIS]      : SPT, EA, SF, PAX, PAY, PCX, PCY, RMFX, RMFY, [JIS-AI]
   ; line 2
; [IBC2000]  : SDC, SC, MS, M1, IF, PX, PY, PCX, PCY, RMFX, RMFY
   ; line 2
; [EURO1996] : S, QO, KD, KR, KW, ALPHA, FPX, FPY
   ; line 2
; [CH2002]   : NSC, SFI, SC, ST, DR, EQ, bMM, FPX, FPY
   ; line 2
; [CHSH2003] : SFI, SC, ST, DR, EQ, bMM, FPX, FPY
   ; line 2
; [NBC1995]  : ZVR, AZ, VZ, IF, FF, PAX, PAY, PCX, PCY, FMFX, FMFY
   ; line 2
; [IS2002]   : SZ, ST, IF, DAMP, FPX, FPY, RFX, RFY
   ; line 2
; [TAIWAN99] : SZ, ST, IF, SMF, PM, PAX, PAY, PApX, PApY, PFX, PFY, RMFX, RMFY
   ; line 2
; [KBC2005]  : RA, SZ(Sds), SC(Sd1), SUG, bCPR, IF, iP, PAX, PAY, PApX, PApY, RMFX, RM
FY ; line 2
; [TAIWAN06] : SZ, Sds, Sd1, Sms, Sm1,Nda, Ndv,Nma, Nmv, ST, Fda, Fdv, Fma, Fmv, SubZ,

;  Sds_t, Sms_t, Td0_t, Tm0_t, IF, ALPHA, PM, PAX, PAY, PApX, PApY, PFX, PFY, RMFX, RM
FY ; line 2
```

```
; [EURO2004] : iGR, iSPE, S, TB, TC, TD, AG, Q, LBF, IF, FPX, FPY,
   ; line 2
; [JIS-AI]   : bUSER, STORY1, XDIR1, YDIR1, STORY2, XDIR2, YDIR2, ...
; [KBC2009]  : SZ, ZF, SC, CU, FA, Fv, SDS, SD1, SUG, IF, ip, PAX, PAY, PApX, PApY, RM
FX, RMFY
; [TAIWAN11] : SZ, Sds, Sd1, Sms, Sm1,Nda, Ndv,Nma, Nmv, ST, Fda, Fdv, Fma, Fmv, SubZ,

;  Sds_t, Sms_t, Td0_t, Tm0_t, IF, ALPHA, PM, PAX, PAY, PApX, PApY, PFX, PFY, RMFX, RM
FY ; line 2
; [NTC2008]  : iGR, iSPE, S, TB, TC, TD, AG, Q, AMPF, Tc*, FPX, FPY,
   ; line 2
; [CH2010]   : NSC, SFI, SC, ST, DR, EQ, bMM, FPX, FPY
   ; line 2
; [IBC2009]  : SC, Ss, S1, Fa, Fv, Sds, Sd1, Cu, TL, OC, IF, iP, PAX, PAY, PApX, PApY,
 RMFX, RMFY ; line 2
; [IBC2012]  : SC, Ss, S1, Fa, Fv, Sds, Sd1, Cu, TL, RC, IF, iP, PAX, PAY, PApX, PApY,
 RMFX, RMFY ; line 2
; [NTC2012]  : iGR, iSPE, S, TB, TC, TD, AG, Q, AMPF, Tc*, FPX, FPY,
   ; line 2
; [P100_2013]: iSPE, TB, TC, TD, AG, Q, IF, FPX, FPY
   ; line 2
; [IS1893_2016]: Zone, Soil, IF, Damp, Peri.X, Peri.Y, RsRdFact_X, RsRdFact_Y
   ; line 2
; [NTC2018]  : iGR, iSPE, S, TB, TC, TD, AG, Q, AMPF, Tc*, FPX, FPY,
   ; line 2
; SSTORY1, ESTORY1, ADDX1, ADDY1, ...
   ; from line 3
   CODE=NTC2018, 0, 1, POS, POS, NO, NO, , 0
        2, 4, 1.427, 0.147, 0.44, 2.336, 0.184, 1, 2.47, 0.273, 0, 0

; End of data for load case [SISMA Y] -------------------------

*USE-STLD, travi

*BEAMLOAD    ; Element Beam Loads
; ELEM_LIST, CMD, TYPE, DIR, bPROJ, [ECCEN], [VALUE], GROUP
; ELEM_LIST, CMD, TYPE, TYPE, DIR, VX, VY, VZ, bPROJ, [ECCEN], [VALUE], GROUP
; [VALUE]       : D1, P1, D2, P2, D3, P3, D4, P4
; [ECCEN]       : bECCEN, ECCDIR, I-END, J-END, bJ-END
; [ADDITIONAL]  : bADDITIONAL, ADDITIONAL_I-END, ADDITIONAL_J-END, bADDITIONAL_J-END
  6046, BEAM   , UNILOAD, GZ, NO , NO, aDir[1], , , , 0, -1, 1, -1, 0, 0, 0, 0, , NO,
0, 0, NO,
  6057, BEAM   , UNILOAD, GZ, NO , NO, aDir[1], , , , 0, -1, 1, -1, 0, 0, 0, 0, , NO,
0, 0, NO,

; End of data for load case [travi] -------------------------

*SFUNCTION    ; Spectrum Function
; FUNC=NAME, iTYPE, iMETHOD, SCALE/MAX, GRAV, DRATIO, DESC, RMF      ; line 1
;   SPEC_CODE, [CODE_DATA]                                            ; line 2
;      PERIOD1, VALUE1, PERIOD2, VALUE2, ...                          ; from line 3
;[CODE_DATA] : NSC, SFI, SC, EQ, TG, DP, MaxEQ
        ; CH2001
;[CODE_DATA] : NSC, SFI, SC, EQ, TG, DP, MaxEQ, nLForce              ; CH2010
;[CODE_DATA] : SFI, SC, EQ, TG, DP, MaxEQ                            ; CHSH2003
;[CODE_DATA] : DIV, SC, SFI, EQ, TG, G                               ; GB50111_2006
;[CODE_DATA] : BT, ZM, ST, SI, SC, TG, CI, CS, CD, EPA, SMAX, PERIOD ; JTG/T B02-01-20
08
;[CODE_DATA] : iSPE, SParam, TB, TC, TD, AG, Q, IF, FPX, FPY         ; P100-1(2013)
   FUNC=Muscoline_T1_C_q=1__CU III, 1, 0, 1, 9.806, 0.05, , 1.000000
   USER
          0.000000,         0.263,   0.007000,         0.282
```

```
          0.015000,         0.301,   0.022000,          0.32
          0.029000,          0.34,   0.037000,         0.359
          0.044000,         0.378,   0.051000,         0.398
          0.059000,         0.417,   0.066000,         0.436
          0.073000,         0.456,   0.081000,         0.475
          0.088000,         0.494,   0.095000,         0.513
          0.103000,         0.533,   0.110000,         0.552
          0.117000,         0.571,   0.125000,         0.591
          0.132000,          0.61,   0.139000,         0.629
          0.147000,         0.648,   0.161000,         0.648
          0.176000,         0.648,   0.191000,         0.648
          0.206000,         0.648,   0.220000,         0.648
          0.235000,         0.648,   0.250000,         0.648
          0.264000,         0.648,   0.279000,         0.648
          0.294000,         0.648,   0.308000,         0.648
          0.323000,         0.648,   0.338000,         0.648
          0.352000,         0.648,   0.367000,         0.648
          0.382000,         0.648,   0.396000,         0.648
          0.411000,         0.648,   0.426000,         0.648
          0.440000,         0.648,   0.535000,         0.534
          0.630000,         0.453,   0.725000,         0.394
          0.820000,         0.349,   0.914000,         0.312
          1.009000,         0.283,   1.104000,         0.259
          1.199000,         0.238,   1.293000,         0.221
          1.388000,         0.206,   1.483000,         0.193
          1.578000,         0.181,   1.672000,         0.171
          1.767000,         0.162,   1.862000,         0.153
          1.957000,         0.146,   2.051000,         0.139
          2.146000,         0.133,   2.241000,         0.127
          2.336000,         0.122,   2.419000,         0.114
          2.502000,         0.107,   2.585000,           0.1
          2.669000,         0.094,   2.752000,         0.088
          2.835000,         0.083,   2.918000,         0.078
          3.001000,         0.074,   3.085000,          0.07
          3.168000,         0.066,   3.251000,         0.063
          3.334000,          0.06,   3.418000,         0.057
          3.501000,         0.054,   3.584000,         0.052
          3.667000,          0.05,   3.750000,         0.047
          3.834000,         0.045,   3.917000,         0.043
          4.000000,         0.042

*SPLDCASE    ; Spectrum Load Cases
; NAME=NAME, DIR, ANGLE, SCALE, PMFT, bDAMP, bECC, INTERP, DESC,       ; line 1
;      COMTYPE, bADDSIGN, iSIGNTYPE, bMODE, bASA, iMAJ                 ; line 2
;      FUNC1, FUNC2, FUNC3, ...                                        ; line 3
;      bUSE1, dFACTOR1, bUSE2, dFACTOR2, ..., bUSEn, dFACTORn          ; line 4      (
bMODE=YES)
;      bCDR, [DR-DC]                                                   ; line 5      (
bDAMP=YES)
;      SMETHOD, bAUTO, ECC, bCONSGL, bTORMOMENT                        ; line 6      (
bECC=YES)
;      STORY1, ECC1, STORY2, ECC2, ..., STORYn, ECCn                   ; from line 7 (
bECC=YES)
; [DR-DC] : iMDTYPE, DALL, iMODE1, DAMPING1, iMODE2, DAMPING2, ...     ; iMDTYPE=1
;         : iMDTYPE, iCOEF, bMASSP, MASSC, bSTIFFP, STIFFC             ; iMDTYPE=2, iC
OEF=1
;         : iMDTYPE, iCOEF, iCALC, bMASSP, FP1, DR1, bSTIFFP, FP2, DR2 ; iMDTYPE=2, iC
OEF=2
;         : iMDTYPE                                                    ; iMDTYPE=3
   NAME=sisma_x, XY, 0, 1, 1, NO, YES, LOG,
        CQC, YES, 0, YES, NO, 0
        Muscoline_T1_C_q=1__CU III
```

```
        YES, 1,YES, 1,YES, 1,YES, 1,YES, 1,YES, 1,YES, 1,YES, 1,YES, 1,YES, 1,YES, 1,Y
ES, 1,YES, 1,YES, 1,YES, 1,YES, 1,YES, 1,YES, 1,YES, 1,YES, 1,YES, 1,YES, 1,YES
, 1,YES, 1
        0, YES, 5, YES, NO
        Roof, 0.41325, 1F, 0.41325

   NAME=sisma_y, XY, 90, 1, 1, NO, YES, LOG,
        CQC, YES, 0, YES, NO, 0
        Muscoline_T1_C_q=1__CU III
        YES, 1,YES, 1,YES, 1,YES, 1,YES, 1,YES, 1,YES, 1,YES, 1,YES, 1,YES, 1,YES, 1,Y
ES, 1,YES, 1,YES, 1,YES, 1,YES, 1,YES, 1,YES, 1,YES, 1,YES, 1,YES, 1,YES, 1,YES
, 1,YES, 1
        0, YES, 5, YES, NO
        Roof, 8.47153e-011, 1F, 8.481e-011



*PUSHOVER-CTRL    ; Pushover Global Control
; GEOM, bPERMIT, STEP, iMAX, bDISP, bFORCE, bENERGY, DNORM, FNORM, ENORM, bSTOP, bBEAM
, bWALL, METHOD, bAXIS, bAXISBEAM, bAXISWALL, bAXISTRUSS, SUPPORT, ELASTIC, bSUPPORT,
bSUPPORTUPLIFT, bSUPPORTCOLLAPSE, ; 1st line : Analysis Option
; NODECONNECTIVITY, nBEAMy, nBEAMz, bWALL, nWALLy, nWALLz, dR, WSize, bMEMB, nRCCODE,
bUseRef, bGraph, bCurve ; 1st line(2) : Analysis Option
; bSYMMETRIC, a1(+), a1(-), a2(+), a2(-)                                ; 2nd line : De
fault Stiffness Ratio(Trilinear)
; bSYMMETRIC, a1(+), a1(-)                                              ; 3rd line : De
fault Stiffness Ratio(Bilinear)
; BM_POS, bBUCKLING, bCR_AIJ, bIgnoreElem                               ; 4th line
; BM_POS, bBUCKLING, bCR_AIJ, 1, CF, WAL, bBTL, BTL, bERTH, ERTH, bSBR, SBR, GRP ; 4th
 line (Eurocode)
; BM_POS, bBUCKLING, bCR_AIJ, 2, bAXIAL_AIJ                             ; 4th line (AIJ
)
; LCNAME1, FACT1, LCNAME2, FACT2, ...                                   ; from line 5th
 line  : Initial Load
; LCTYPE1, LCTYPE2, ...                                                 ; Last line
       : Initial Load
   0, YES, 10, 10, YES, NO, NO, 0.001, 0.001, 0.001, NO, YES, NO, 0, NO, YES, NO, NO,
0, 1, NO, NO, NO, 1, 15, 15, NO, EQUAL, 20, 10, 0.4, NO, 0, NO, YES, YES
   YES, 0.1, 0.1, 0.05, 0.05
   YES, 0.05, 0.05
   I, NO, YES, YES, 1, 1, 1.6, NO, 1.6, NO, 0.85, NO, 0.575,
   PP, 1, G1+G2 copertura A, 3.7, G1+G2 copertura B, 1.5, Q sottotetto, 0.3
   sporto gronda, 2, travi, 3, parapetto, 1.5, muro, 4.6
   1, 1, 1, 1, 1, 1, 1, 1
*HINGE-TYPE    ; Pushover Hinge Type/Properties
; NAME=NAME, DESC                                                                        ;
1st line
; ELEM_TYP, WALL_TYP, MAT_TYP, DEFINITION, INTERACTION, bHINGELENGTH, INTEGRATION   ;
2nd line (ELEM_TYP=WALL)
; ELEM_TYP, MAT_TYP, DEFINITION, INTERACTION , bHINGELENGTH, INTEGRATION            ;
2nd line
; HINGE_TYPE, PROP, FIBER, FIBER_AUTO, AUTO_R, R, AUTO_OUTPL, OUTPL                 ;
3rd line
; bFx, HLOC[NSECT], [DISTR], [RAT_I], [RAT_J], SKCV, [M_PROP]   ; 4rd line
; bFy, HLOC[NSECT], [DISTR], [RAT_I], [RAT_J], SKCV, [M_PROP]   ; 5th line
; bFz, HLOC[NSECT], [DISTR], [RAT_I], [RAT_J], SKCV, [M_PROP]   ; 6th line
; bMx, HLOC[NSECT], [DISTR], [RAT_I], [RAT_J], SKCV, [M_PROP]   ; 7th line
; bMy, HLOC[NSECT], [DISTR], [RAT_I], [RAT_J], SKCV, [M_PROP]   ; 8th line
; bMz, HLOC[NSECT], [DISTR], [RAT_I], [RAT_J], SKCV, [M_PROP]   ; 9th line
; CALC, bSYM-IJ, [YSDATA]-I, [YSDATA]-J                  ; 10th line (MAT_TYPE=RC,STEE
L, INTERACTION=PMM)
; BLDG_TYPE, COMP, SHEAR, COEFF                          ; 10th line (MAT_TYPE=MASONRY
```

```
,  DEFINITION=PIER)
; COMP, SHEAR, FORC                                        ; 10th line (MAT_TYPE=MASONRY
,  DEFINITION=SPAN)
; [M_PROP] : CALC, TYPE, [PROP]
    ; (SKCV=BI,TRI,SLBI,SLTR)
; [M_PROP] : CALC, TYPE, bSYM_IJ, [PROP]-I, [PROP]-J
    ; (SKCV=BI,TRI,SLBI,SLTR, HLOC=IJ)
; [M_PROP] : CALC, [FEMA]
    ; (SKCV=FEMA)
; [M_PROP] : CALC, [EC8]
    ; (SKCV=EC8)
; [M_PROP] : CALC, bSYM_IJ, [FEMA]-I  [FEMA]-J
    ; (SKCV=FEMA, HLOC=IJ)
; [PROP] : bSYM, RATIO_OPT, [DATA]-TENS, [DATA]-COMP, STIF_METHOD, STIFF
    ; (SKCV=BI,TRI)
; [PROP] : bSYM, RATIO_OPT, [DATA]-TENS, [DATA]-COMP, STIF_METHOD, STIFF, bAutoSpan, S
PAN ; (SKCV=TRI, RATIO_OPT=AIJ)
; [PROP] : SLIP_TYPE, RATIO_OPT, [DATA]-TENS, [DATA]-COMP, STIF_METHOD, STIFF, IGT, IG
C    ; (SKCV=SLBI,SLTR)
; [DATA] : YS-P1, YS-P2, YS-P3, SRR1, SRR2, SRRy,
    ; (TYPE=RATIO)
; [DATA] : YS-P1, YS-P2, YS-P3, YD-D1, YD-D2, YD-D3
    ; (TYPE=DEFORM)
; [FEMA] : DEFORM, bSYM, bMULT, SUBCOUNT, YS-P1P, YS-P1N, bUSER-D, YD-D1P, YD-D1N,
;        : STIF_METHOD, STIFF, IO-P, LS-P, CP-P, IO-N, LS-N, CP-N, bUSER-RATIO
;        : bSHAPE, SHAPE, bSTRLOSS, STRLOSS, INFILLTYPE, bTOTALSTRLOSS, TOTALSTRLOSS,
UNLOADTYPE, dEXP, dPRFACT, INFILLSTIFF, KMI, KMS, HM, TM
;        : EN-FR, DN-FR, CN-FR, BN-FR, A-FR, BP-FR, CP-FR, DP-FR, EP-FR  ; F/FY or M/M
Y
;        : EN-DR, DN-DR, CN-DR, BN-DR, A-DR, BP-DR, CP-DR, DP-DR, EP-DR  ; D/DY
;        : AXIAL, IO-P, LS-P, CP-P, IO-N, LS-N, CP-N                     ; (bMULT=YES)
, Loop  SUBCOUNT
;        : EN-FR, DN-FR, CN-FR, BN-FR, A-FR, BP-FR, CP-FR, DP-FR, EP-FR  ; (bMULT=YES)
 F/FY or M/MY
;        : EN-DR, DN-DR, CN-DR, BN-DR, A-DR, BP-DR, CP-DR, DP-DR, EP-DR  ; (bMULT=YES)
 D/DY
; [EC8]  : bSYM, bMULT, SUBCOUNT, YS-P1P, YS-P1N, bUSER-D, YD-D1P, YD-D1N,
;        : STIF_METHOD, STIFF-P, STIFF-M, IO-P, LS-P, CP-P, IO-N, LS-N, CP-N, bUSER-RA
TIO
;        : EN-FR, DN-FR, CN-FR, BN-FR, A-FR, BP-FR, CP-FR, DP-FR, EP-FR  ; F/FY or M/M
Y
;        : EN-DR, DN-DR, CN-DR, BN-DR, A-DR, BP-DR, CP-DR, DP-DR, EP-DR  ; D/DY
; [YSDATA] : bSYM-YZ, bSYM-PN, PC0, PMAX,
;          : MY1-P, MY1-N, MY2-P, MY2-N, MZ1-P, MZ1-N, MZ2-P, MZ2-N,
;          : INTPOLATION, ALPHA, bSYM-Y, bSYM-Z, [YSPROP]-1ST,  [YSPROP]-2ND
; [YSPROP] : PY1P, PY2P, PY3P,..., PY10P, PY11P, MY1P, MY2P,..., MY10P, MY11P
;          : PY1N, PY2N, PY3N,..., PY10N, PY11N, MY1N, MY2N,..., MY10N, MY11N
;          : PZ1P, PZ2P, PZ3P,..., PZ10P, PZ11P, MZ1P, MZ2P,..., MZ10P, MZ11P
;          : PZ1N, PZ2N, PZ3N,..., PZ10N, PZ11N, MZ1N, MZ2N,..., MZ10N, MZ11N
  NAME=Maschi MA, Maschi
    BEAM, , MASONRY, PIER, NONE, NO, 0, 0.5, 0.5, 0.5, 0.5, YES
    0, 0, 0, 1, 0, 0.4, 0, NO, NONE
    YES, C, FEMA, USER, \
      D/DY, NO, NO, 1, 1, 1, NO, 0, 0, , ELASTIC, 0, 2, 4, 6, 2, 4, 6, YES, \
      NO, GENERAL, NO, YES, FULL, NO, NO, NO, ORIGIN_ORIENTED, 0.4, 0.5, ELASTIC, 2000
, 500, 1, 1, \
      -1.75, -1.75, -1.75, -1, 0, 5, 5, 5, 5, \
      -0.2, -0.2, -1, -1, 0, 0, 0, 0, 0
    NO
    YES, C, FEMA, USER, \
      D/DY, YES, NO, 1, 1, 1, NO, 0, 0, , ELASTIC, 0, 2, 4, 6, 2, 4, 6, YES, \
      NO, GENERAL, NO, YES, FULL, NO, NO, NO, ORIGIN_ORIENTED, 0.4, 0.5, ELASTIC, 2000
```

```
, 500, 1, 1, \
      -0.006, -0.004, -0.004, -0.001, 0, 0.001, 0.004, 0.004, 0.006, \
      -0.3, -0.3, -1.001, -1, 0, 1, 1.001, 0.3, 0.3
    NO
    YES, IJ, FEMA, USER, YES, \
      D/DY, YES, NO, 1, 1, 1, NO, 0, 0, , 6EI, 0, 2, 4, 6, 2, 4, 6, YES, \
      NO, GENERAL, NO, YES, FULL, NO, NO, NO, ORIGIN_ORIENTED, 0.4, 0.5, ELASTIC, 2000
, 500, 1, 1, \
      -0.009, -0.006, -0.006, -0.001, 0, 0.001, 0.006, 0.006, 0.009, \
      -0.3, -0.3, -1.001, -1, 0, 1, 1.001, 0.3, 0.3, \
      D/DY, YES, NO, 1, 1, 1, NO, 0, 0, , 6EI, 0, 2, 4, 6, 2, 4, 6, YES, \
      NO, GENERAL, NO, YES, FULL, NO, NO, NO, ORIGIN_ORIENTED, 0.4, 0.5, ELASTIC, 2000
, 500, 1, 1, \
      -0.009, -0.006, -0.006, -0.001, 0, 0.001, 0.006, 0.006, 0.009, \
      -0.3, -0.3, -1.001, -1, 0, 1, 1.001, 0.3, 0.3
    NO
    EXIST, 2560, 67, 0.85
  NAME=Pilastri c.a.,
    BEAM, , RC, MTHETA, PMM, NO, 0, 0.5, 0.5, 0.5, 0.5, YES
    0, 0, 0, 1, 0, 0.4, 0, NO, NONE
    YES, IJ, EC8, AUTO, YES, \
      D/DY, NO, NO, 1, 1, 1, NO, 1, 1, 1, ELASTIC, 0, 0, 1.25, 4, 6, 1, 1, 1, NO, \
      NO, GENERAL, NO, YES, FULL, NO, NO, NO, ORIGIN_ORIENTED, 0.4, 0.5, ELASTIC, 2000
, 500, 1, 1, \
      -8, -1.01, -1.01, -1, 0, 1, 6, 6, 8, \
      -0.2, -0.2, -1, -1, 0, 1, 1.001, 0.2, 0.2, \
      D/DY, NO, NO, 1, 1, 1, NO, 1, 1, 1, ELASTIC, 0, 0, 1.25, 4, 6, 1, 1, 1, NO, \
      NO, GENERAL, NO, YES, FULL, NO, NO, NO, ORIGIN_ORIENTED, 0.4, 0.5, ELASTIC, 2000
, 500, 1, 1, \
      -8, -1.01, -1.01, -1, 0, 1, 6, 6, 8, \
      -0.2, -0.2, -1, -1, 0, 1, 1.001, 0.2, 0.2
    YES, IJ, EC8, AUTO, YES, \
      D/DY, NO, NO, 1, 1, 1, NO, 1, 1, , ELASTIC, 0, 0, 1, 1, 1, 1, 1, 1, NO, \
      NO, GENERAL, NO, YES, FULL, NO, NO, NO, ORIGIN_ORIENTED, 0.4, 0.5, ELASTIC, 2000
, 500, 1, 1, \
      -8, -1.01, -1.01, -1, 0, 1, 1.01, 1.01, 8, \
      -0.2, -0.2, -1, -1, 0, 1, 1, 0.2, 0.2, \
      D/DY, NO, NO, 1, 1, 1, NO, 1, 1, , ELASTIC, 0, 0, 1, 1, 1, 1, 1, 1, NO, \
      NO, GENERAL, NO, YES, FULL, NO, NO, NO, ORIGIN_ORIENTED, 0.4, 0.5, ELASTIC, 2000
, 500, 1, 1, \
      -8, -1.01, -1.01, -1, 0, 1, 1.01, 1.01, 8, \
      -0.2, -0.2, -1, -1, 0, 1, 1, 0.2, 0.2
    YES, IJ, EC8, AUTO, YES, \
      D/DY, NO, NO, 1, 1, 1, NO, 1, 1, , ELASTIC, 0, 0, 1, 1, 1, 1, 1, 1, NO, \
      NO, GENERAL, NO, YES, FULL, NO, NO, NO, ORIGIN_ORIENTED, 0.4, 0.5, ELASTIC, 2000
, 500, 1, 1, \
      -8, -1.01, -1.01, -1, 0, 1, 1.01, 1.01, 8, \
      -0.2, -0.2, -1, -1, 0, 1, 1, 0.2, 0.2, \
      D/DY, NO, NO, 1, 1, 1, NO, 1, 1, , ELASTIC, 0, 0, 1, 1, 1, 1, 1, 1, NO, \
      NO, GENERAL, NO, YES, FULL, NO, NO, NO, ORIGIN_ORIENTED, 0.4, 0.5, ELASTIC, 2000
, 500, 1, 1, \
      -8, -1.01, -1.01, -1, 0, 1, 1.01, 1.01, 8, \
      -0.2, -0.2, -1, -1, 0, 1, 1, 0.2, 0.2
    NO
    YES, IJ, EC8, AUTO, YES, \
      D/DY, NO, NO, 1, 1, 1, NO, 1, 1, 1, 6EI, 1, 1, 1, 0.75, 1, 1, 0.75, 1, NO, \
      NO, GENERAL, NO, YES, FULL, NO, NO, NO, ORIGIN_ORIENTED, 0.4, 0.5, ELASTIC, 2000
, 500, 1, 1, \
      -12, -9, -9, -1, 0, 1, 9, 9, 12, \
      -0.2, -0.2, -1.001, -1, 0, 1, 1.001, 0.2, 0.2, \
      D/DY, NO, NO, 1, 1, 1, NO, 1, 1, 1, 6EI, 1, 1, 1, 0.75, 1, 1, 0.75, 1, NO, \
      NO, GENERAL, NO, YES, FULL, NO, NO, NO, ORIGIN_ORIENTED, 0.4, 0.5, ELASTIC, 2000
```

```
, 500, 1, 1, \
      -12, -9, -9, -1, 0, 1, 9, 9, 12, \
      -0.2, -0.2, -1.001, -1, 0, 1, 1.001, 0.2, 0.2
    YES, IJ, EC8, AUTO, YES, \
      D/DY, NO, NO, 1, 1, 1, NO, 1, 1, 1, 6EI, 1, 1, 1, 0.75, 1, 1, 0.75, 1, NO, \
      NO, GENERAL, NO, YES, FULL, NO, NO, NO, ORIGIN_ORIENTED, 0.4, 0.5, ELASTIC, 2000
, 500, 1, 1, \
      -12, -9, -9, -1, 0, 1, 9, 9, 12, \
      -0.2, -0.2, -1.001, -1, 0, 1, 1.001, 0.2, 0.2, \
      D/DY, NO, NO, 1, 1, 1, NO, 1, 1, 1, 6EI, 1, 1, 1, 0.75, 1, 1, 0.75, 1, NO, \
      NO, GENERAL, NO, YES, FULL, NO, NO, NO, ORIGIN_ORIENTED, 0.4, 0.5, ELASTIC, 2000
, 500, 1, 1, \
      -12, -9, -9, -1, 0, 1, 9, 9, 12, \
      -0.2, -0.2, -1.001, -1, 0, 1, 1.001, 0.2, 0.2
    AUTO, YES, NO, YES, 0.5, 1, 0.5, 0.5, 1, 1, 0.5, 0.5, 1, 1, ELLIPSE, 2, YES, YES,
\
      1, 0.8, 0.6, 0.4, 0.2, 0, -0.2, -0.4, -0.6, -0.8, -1, 0, 0.3, 0.6, 0.8, 0.9, 1,
0.9, 0.8, 0.6, 0.3, 0, \
      1, 0.8, 0.6, 0.4, 0.2, 0, -0.2, -0.4, -0.6, -0.8, -1, -0, -0.3, -0.6, -0.8, -0.9
, -1, -0.9, -0.8, -0.6, -0.3, -0, \
      1, 0.8, 0.6, 0.4, 0.2, 0, -0.2, -0.4, -0.6, -0.8, -1, 0, 0.3, 0.6, 0.8, 0.9, 1,
0.9, 0.8, 0.6, 0.3, 0, \
      1, 0.8, 0.6, 0.4, 0.2, 0, -0.2, -0.4, -0.6, -0.8, -1, -0, -0.3, -0.6, -0.8, -0.9
, -1, -0.9, -0.8, -0.6, -0.3, -0, \
      1, 0.8, 0.6, 0.4, 0.2, 0, -0.2, -0.4, -0.6, -0.8, -1, 0, 0.3, 0.6, 0.8, 0.9, 1,
0.9, 0.8, 0.6, 0.3, 0, \
      1, 0.8, 0.6, 0.4, 0.2, 0, -0.2, -0.4, -0.6, -0.8, -1, -0, -0.3, -0.6, -0.8, -0.9
, -1, -0.9, -0.8, -0.6, -0.3, -0, \
      1, 0.8, 0.6, 0.4, 0.2, 0, -0.2, -0.4, -0.6, -0.8, -1, 0, 0.3, 0.6, 0.8, 0.9, 1,
0.9, 0.8, 0.6, 0.3, 0, \
      1, 0.8, 0.6, 0.4, 0.2, 0, -0.2, -0.4, -0.6, -0.8, -1, -0, -0.3, -0.6, -0.8, -0.9
, -1, -0.9, -0.8, -0.6, -0.3, -0 , \
      NO, YES, 0.5, 1, 0.5, 0.5, 1, 1, 0.5, 0.5, 1, 1, ELLIPSE, 2, YES, YES, \
      1, 0.8, 0.6, 0.4, 0.2, 0, -0.2, -0.4, -0.6, -0.8, -1, 0, 0.3, 0.6, 0.8, 0.9, 1,
0.9, 0.8, 0.6, 0.3, 0, \
      1, 0.8, 0.6, 0.4, 0.2, 0, -0.2, -0.4, -0.6, -0.8, -1, -0, -0.3, -0.6, -0.8, -0.9
, -1, -0.9, -0.8, -0.6, -0.3, -0, \
      1, 0.8, 0.6, 0.4, 0.2, 0, -0.2, -0.4, -0.6, -0.8, -1, 0, 0.3, 0.6, 0.8, 0.9, 1,
0.9, 0.8, 0.6, 0.3, 0, \
      1, 0.8, 0.6, 0.4, 0.2, 0, -0.2, -0.4, -0.6, -0.8, -1, -0, -0.3, -0.6, -0.8, -0.9
, -1, -0.9, -0.8, -0.6, -0.3, -0, \
      1, 0.8, 0.6, 0.4, 0.2, 0, -0.2, -0.4, -0.6, -0.8, -1, 0, 0.3, 0.6, 0.8, 0.9, 1,
0.9, 0.8, 0.6, 0.3, 0, \
      1, 0.8, 0.6, 0.4, 0.2, 0, -0.2, -0.4, -0.6, -0.8, -1, -0, -0.3, -0.6, -0.8, -0.9
, -1, -0.9, -0.8, -0.6, -0.3, -0, \
      1, 0.8, 0.6, 0.4, 0.2, 0, -0.2, -0.4, -0.6, -0.8, -1, 0, 0.3, 0.6, 0.8, 0.9, 1,
0.9, 0.8, 0.6, 0.3, 0, \
      1, 0.8, 0.6, 0.4, 0.2, 0, -0.2, -0.4, -0.6, -0.8, -1, -0, -0.3, -0.6, -0.8, -0.9
, -1, -0.9, -0.8, -0.6, -0.3, -0
  NAME=Pilastri fitt MA, Pilastri fitt
    BEAM, , MASONRY, PIER, NONE, NO, 0, 0.5, 0.5, 0.5, 0.5, YES
    0, 0, 0, 1, 0, 0.4, 0, NO, NONE
    YES, C, FEMA, USER, \
      D/DY, NO, NO, 1, 1, 1, NO, 0, 0, , ELASTIC, 0, 2, 4, 6, 2, 4, 6, YES, \
      NO, GENERAL, NO, YES, FULL, NO, NO, NO, ORIGIN_ORIENTED, 0.4, 0.5, ELASTIC, 2000
, 500, 1, 1, \
      -1.75, -1.75, -1.75, -1, 0, 5, 5, 5, 5, \
      -0.2, -0.2, -1, -1, 0, 0, 0, 0, 0
    NO
    NO
    NO
    NO
```

```
    NO
    EXIST, 1926, 37, 0.85
  NAME=Fasce MA, Fasce
    BEAM, , MASONRY, SPAN, NONE, NO, 0, 0.5, 0.5, 0.5, 0.5, YES
    0, 0, 0, 1, 0, 0.4, 0, NO, NONE
    YES, C, FEMA, USER, \
      D/DY, NO, NO, 1, 1, 1, NO, 0, 0, , ELASTIC, 0, 2, 4, 6, 2, 4, 6, YES, \
      NO, GENERAL, NO, YES, FULL, NO, NO, NO, ORIGIN_ORIENTED, 0.4, 0.5, ELASTIC, 2000
, 500, 1, 1, \
      -1.75, -1.75, -1.75, -1, 0, 5, 5, 5, 5, \
      -0.2, -0.2, -1, -1, 0, 0, 0, 0, 0
    NO
    YES, C, FEMA, USER, \
      D/DY, YES, NO, 1, 1, 1, NO, 0, 0, , ELASTIC, 0, 2, 4, 6, 2, 4, 6, YES, \
      NO, GENERAL, NO, YES, FULL, NO, NO, NO, ORIGIN_ORIENTED, 0.4, 0.5, ELASTIC, 2000
, 500, 1, 1, \
      -0.006, -0.004, -0.004, -0.001, 0, 0.001, 0.004, 0.004, 0.006, \
      -0.3, -0.3, -1.001, -1, 0, 1, 1.001, 0.3, 0.3
    NO
    YES, IJ, FEMA, USER, YES, \
      D/DY, YES, NO, 1, 1, 1, NO, 0, 0, , 6EI, 0, 2, 4, 6, 2, 4, 6, YES, \
      NO, GENERAL, NO, YES, FULL, NO, NO, NO, ORIGIN_ORIENTED, 0.4, 0.5, ELASTIC, 2000
, 500, 1, 1, \
      -0.012, -0.008, -0.008, -0.001, 0, 0.001, 0.008, 0.008, 0.012, \
      -0.3, -0.3, -1.001, -1, 0, 1, 1.001, 0.3, 0.3, \
      D/DY, YES, NO, 1, 1, 1, NO, 0, 0, , 6EI, 0, 2, 4, 6, 2, 4, 6, YES, \
      NO, GENERAL, NO, YES, FULL, NO, NO, NO, ORIGIN_ORIENTED, 0.4, 0.5, ELASTIC, 2000
, 500, 1, 1, \
      -0.012, -0.008, -0.008, -0.001, 0, 0.001, 0.008, 0.008, 0.012, \
      -0.3, -0.3, -1.001, -1, 0, 1, 1.001, 0.3, 0.3
    NO
    2560, 67, 80
  NAME=Maschi MB, Maschi
    BEAM, , MASONRY, PIER, NONE, NO, 0, 0.5, 0.5, 0.5, 0.5, YES
    0, 0, 0, 1, 0, 0.4, 0, NO, NONE
    YES, C, FEMA, USER, \
      D/DY, NO, NO, 1, 1, 1, NO, 0, 0, , ELASTIC, 0, 2, 4, 6, 2, 4, 6, YES, \
      NO, GENERAL, NO, YES, FULL, NO, NO, NO, ORIGIN_ORIENTED, 0.4, 0.5, ELASTIC, 2000
, 500, 1, 1, \
      -1.75, -1.75, -1.75, -1, 0, 5, 5, 5, 5, \
      -0.2, -0.2, -1, -1, 0, 0, 0, 0, 0
    NO
    YES, C, FEMA, USER, \
      D/DY, YES, NO, 1, 1, 1, NO, 0, 0, , ELASTIC, 0, 2, 4, 6, 2, 4, 6, YES, \
      NO, GENERAL, NO, YES, FULL, NO, NO, NO, ORIGIN_ORIENTED, 0.4, 0.5, ELASTIC, 2000
, 500, 1, 1, \
      -0.006, -0.004, -0.004, -0.001, 0, 0.001, 0.004, 0.004, 0.006, \
      -0.3, -0.3, -1.001, -1, 0, 1, 1.001, 0.3, 0.3
    NO
    YES, IJ, FEMA, USER, YES, \
      D/DY, YES, NO, 1, 1, 1, NO, 0, 0, , 6EI, 0, 2, 4, 6, 2, 4, 6, YES, \
      NO, GENERAL, NO, YES, FULL, NO, NO, NO, ORIGIN_ORIENTED, 0.4, 0.5, ELASTIC, 2000
, 500, 1, 1, \
      -0.009, -0.006, -0.006, -0.001, 0, 0.001, 0.006, 0.006, 0.009, \
      -0.3, -0.3, -1.001, -1, 0, 1, 1.001, 0.3, 0.3, \
      D/DY, YES, NO, 1, 1, 1, NO, 0, 0, , 6EI, 0, 2, 4, 6, 2, 4, 6, YES, \
      NO, GENERAL, NO, YES, FULL, NO, NO, NO, ORIGIN_ORIENTED, 0.4, 0.5, ELASTIC, 2000
, 500, 1, 1, \
      -0.009, -0.006, -0.006, -0.001, 0, 0.001, 0.006, 0.006, 0.009, \
      -0.3, -0.3, -1.001, -1, 0, 1, 1.001, 0.3, 0.3
    NO
    EXIST, 2962, 222, 0.85
```

```
  NAME=Pilastri fitt MB, Pilastri fitt
    BEAM, , MASONRY, PIER, NONE, NO, 0, 0.5, 0.5, 0.5, 0.5, YES
    0, 0, 0, 1, 0, 0.4, 0, NO, NONE
    YES, C, FEMA, USER, \
      D/DY, NO, NO, 1, 1, 1, NO, 0, 0, , ELASTIC, 0, 2, 4, 6, 2, 4, 6, YES, \
      NO, GENERAL, NO, YES, FULL, NO, NO, NO, ORIGIN_ORIENTED, 0.4, 0.5, ELASTIC, 2000
, 500, 1, 1, \
      -1.75, -1.75, -1.75, -1, 0, 5, 5, 5, 5, \
      -0.2, -0.2, -1, -1, 0, 0, 0, 0, 0
    NO
    NO
    NO
    NO
    NO
    EXIST, 2962, 222, 0.85
  NAME=Fasce MB, Fasce
    BEAM, , MASONRY, SPAN, NONE, NO, 0, 0.5, 0.5, 0.5, 0.5, YES
    0, 0, 0, 1, 0, 0.4, 0, NO, NONE
    YES, C, FEMA, USER, \
      D/DY, NO, NO, 1, 1, 1, NO, 0, 0, , ELASTIC, 0, 2, 4, 6, 2, 4, 6, YES, \
      NO, GENERAL, NO, YES, FULL, NO, NO, NO, ORIGIN_ORIENTED, 0.4, 0.5, ELASTIC, 2000
, 500, 1, 1, \
      -1.75, -1.75, -1.75, -1, 0, 5, 5, 5, 5, \
      -0.2, -0.2, -1, -1, 0, 0, 0, 0, 0
    NO
    YES, C, FEMA, USER, \
      D/DY, YES, NO, 1, 1, 1, NO, 0, 0, , ELASTIC, 0, 2, 4, 6, 2, 4, 6, YES, \
      NO, GENERAL, NO, YES, FULL, NO, NO, NO, ORIGIN_ORIENTED, 0.4, 0.5, ELASTIC, 2000
, 500, 1, 1, \
      -0.006, -0.004, -0.004, -0.001, 0, 0.001, 0.004, 0.004, 0.006, \
      -0.3, -0.3, -1.001, -1, 0, 1, 1.001, 0.3, 0.3
    NO
    YES, IJ, FEMA, USER, YES, \
      D/DY, YES, NO, 1, 1, 1, NO, 0, 0, , 6EI, 0, 2, 4, 6, 2, 4, 6, YES, \
      NO, GENERAL, NO, YES, FULL, NO, NO, NO, ORIGIN_ORIENTED, 0.4, 0.5, ELASTIC, 2000
, 500, 1, 1, \
      -0.012, -0.008, -0.008, -0.001, 0, 0.001, 0.008, 0.008, 0.012, \
      -0.3, -0.3, -1.001, -1, 0, 1, 1.001, 0.3, 0.3, \
      D/DY, YES, NO, 1, 1, 1, NO, 0, 0, , 6EI, 0, 2, 4, 6, 2, 4, 6, YES, \
      NO, GENERAL, NO, YES, FULL, NO, NO, NO, ORIGIN_ORIENTED, 0.4, 0.5, ELASTIC, 2000
, 500, 1, 1, \
      -0.012, -0.008, -0.008, -0.001, 0, 0.001, 0.008, 0.008, 0.012, \
      -0.3, -0.3, -1.001, -1, 0, 1, 1.001, 0.3, 0.3
    NO
    2962, 222, 80

*HINGE-ASSIGN    ; Assign Pushover Hinge
; TYPE=TYPE_NAME, ELEM_NO(GLINK_NO), HINGE_TYP, FIBER_KEY  ; 1st line
  TYPE=BEAM, 14, Maschi MA, 0
  TYPE=BEAM, 15, Maschi MA, 0
  TYPE=BEAM, 16, Maschi MA, 0
  TYPE=BEAM, 6122, Fasce MA, 0
  TYPE=BEAM, 6123, Fasce MA, 0

*PUSHOVER-LOAD   ; Pushover Load Cases
; NAME=NAME, DESC,                                  ; 1st line
; STEP, bUSEINILOAD, bPDELTA, METHOD, bREAC, bDISP  ; 2nd line
; CTRL_OPT, INC_FUNCTION, ANAL_RATIO                ; 3rd line (METHOD=LOAD)
; CTRL_OPT, DISPL                                   ; 3rd line (METHOD=DISP, CTRL_OPT=
GLOBAL)
; CTRL_OPT, MNODE, DIR, DISPL                       ; 3rd line (METHOD=DISP, CTRL_OPT=
MNODE)
```

```
; bANAL_LIMIT, VALUE, LOAD_PATTERN                    ; 4th line
; DIR, SCALE                                          ; 5th line (LOAD_PATTERN=UNIFORM)
; MODE, SCALE                                         ; 5th line (LOAD_PATTERN=MODE)
; LCNAME1, SCALE1, LCNAME2, SCALE2, ...               ; from 5th line (LOAD_PATTERN=STAT
IC)
   NAME=GU1 +Y,
        200, YES, NO, DISP, YES, NO, NO, 20
        MNODE, 192, DY, 0.03
        NO, 10, STATIC, YES, NO, NO, 10, 10
        SISMA Y, 1
   NAME=GU1 -Y,
        200, YES, NO, DISP, YES, NO, NO, 20
        MNODE, 192, DY, -0.03
        NO, 10, STATIC, YES, NO, NO, 10, 10
        SISMA Y, -1
   NAME=GU2 +Y,
        200, YES, NO, DISP, YES, NO, NO, 20
        MNODE, 192, DY, 0.03
        NO, 10, UNIFORM, YES, NO, NO, 10, 10
        DY, 1
   NAME=GU2 -Y,
        200, YES, NO, DISP, YES, NO, NO, 20
        MNODE, 192, DY, -0.03
        NO, 10, UNIFORM, YES, NO, NO, 10, 10
        DY, -1

*LOADCOMB    ; Combinations
; NAME=NAME, KIND, ACTIVE, bES, iTYPE, DESC, iSERV-TYPE, nLCOMTYPE   ; line 1
;      ANAL1, LCNAME1, FACT1, ...                                     ; from line 2
   NAME=SISMA V, CONC, STRENGTH, 0, 0, , 0, 0
        ST, PP, 1, ST, G1+G2 copertura A, 3.7, ST, G1+G2 copertura B, 1.5
        ST, Q sottotetto, 0.3, ST, sporto gronda, 2, ST, travi, 3
        ST, parapetto, 1.5, ST, muro, 4.6
   NAME=sisma_1, CONC, STRENGTH, 0, 0, , 0, 0
        RS, sisma x, 1, RS, sisma_y, 0.3, ES, sisma_x, 1, ES, sisma_y, 0.3
        CBC, SISMA V, 1
   NAME=sisma_2, CONC, STRENGTH, 0, 0, , 0, 0
        RS, sisma_x, 1, RS, sisma_y, 0.3, ES, sisma_x, 1, ES, sisma_y, -0.3
        CBC, SISMA V, 1
   NAME=sisma_3, CONC, STRENGTH, 0, 0, , 0, 0
        RS, sisma x, 1, RS, sisma_y, 0.3, ES, sisma_x, -1, ES, sisma_y, 0.3
        CBC, SISMA V, 1
   NAME=sisma_4, CONC, STRENGTH, 0, 0, , 0, 0
        RS, sisma_x, 1, RS, sisma_y, 0.3, ES, sisma_x, -1, ES, sisma_y, -0.3
        CBC, SISMA V, 1
   NAME=sisma_5, CONC, STRENGTH, 0, 0, , 0, 0
        RS, sisma_x, 1, RS, sisma_y, -0.3, ES, sisma_x, 1, ES, sisma_y, 0.3
        CBC, SISMA V, 1
   NAME=sisma_6, CONC, STRENGTH, 0, 0, , 0, 0
        RS, sisma_x, 1, RS, sisma_y, -0.3, ES, sisma_x, 1, ES, sisma_y, -0.3
        CBC, SISMA V, 1
   NAME=sisma_7, CONC, STRENGTH, 0, 0, , 0, 0
        RS, sisma_x, 1, RS, sisma_y, -0.3, ES, sisma_x, -1, ES, sisma_y, 0.3
        CBC, SISMA V, 1
   NAME=sisma_8, CONC, STRENGTH, 0, 0, , 0, 0
        RS, sisma_x, 1, RS, sisma_y, -0.3, ES, sisma_x, -1, ES, sisma_y, -0.3
        CBC, SISMA V, 1
   NAME=sisma_9, CONC, STRENGTH, 0, 0, , 0, 0
        RS, sisma_x, -1, RS, sisma_y, 0.3, ES, sisma_x, 1, ES, sisma_y, 0.3
        CBC, SISMA V, 1
   NAME=sisma_10, CONC, STRENGTH, 0, 0, , 0, 0
        RS, sisma_x, -1, RS, sisma_y, 0.3, ES, sisma_x, 1, ES, sisma_y, -0.3
```

```
     CBC, SISMA V, 1
NAME=sisma_11, CONC, STRENGTH, 0, 0, , 0, 0
     RS, sisma_x, -1, RS, sisma_y, 0.3, ES, sisma_x, -1, ES, sisma_y, 0.3
     CBC, SISMA V, 1
NAME=sisma_12, CONC, STRENGTH, 0, 0, , 0, 0
     RS, sisma_x, -1, RS, sisma_y, 0.3, ES, sisma_x, -1, ES, sisma_y, -0.3
     CBC, SISMA V, 1
NAME=sisma_13, CONC, STRENGTH, 0, 0, , 0, 0
     RS, sisma_x, -1, RS, sisma_y, -0.3, ES, sisma_x, 1, ES, sisma_y, 0.3
     CBC, SISMA V, 1
NAME=sisma_14, CONC, STRENGTH, 0, 0, , 0, 0
     RS, sisma_x, -1, RS, sisma_y, -0.3, ES, sisma_x, 1, ES, sisma_y, -0.3
     CBC, SISMA V, 1
NAME=sisma_15, CONC, STRENGTH, 0, 0, , 0, 0
     RS, sisma_x, -1, RS, sisma_y, -0.3, ES, sisma_x, -1, ES, sisma_y, 0.3
     CBC, SISMA V, 1
NAME=sisma_16, CONC, STRENGTH, 0, 0, , 0, 0
     RS, sisma_x, -1, RS, sisma_y, -0.3, ES, sisma_x, -1, ES, sisma_y, -0.3
     CBC, SISMA V, 1
NAME=sisma_17, CONC, STRENGTH, 0, 0, , 0, 0
     RS, sisma_x, 0.3, RS, sisma_y, 1, ES, sisma_x, 0.3, ES, sisma_y, 1
     CBC, SISMA V, 1
NAME=sisma_18, CONC, STRENGTH, 0, 0, , 0, 0
     RS, sisma_x, 0.3, RS, sisma_y, 1, ES, sisma_x, -0.3, ES, sisma_y, 1
     CBC, SISMA V, 1
NAME=sisma_19, CONC, STRENGTH, 0, 0, , 0, 0
     RS, sisma_x, 0.3, RS, sisma_y, 1, ES, sisma_x, 0.3, ES, sisma_y, -1
     CBC, SISMA V, 1
NAME=sisma_20, CONC, STRENGTH, 0, 0, , 0, 0
     RS, sisma_x, 0.3, RS, sisma_y, 1, ES, sisma_x, -0.3, ES, sisma_y, -1
     CBC, SISMA V, 1
NAME=sisma_21, CONC, STRENGTH, 0, 0, , 0, 0
     RS, sisma_x, -0.3, RS, sisma_y, 1, ES, sisma_x, 0.3, ES, sisma_y, 1
     CBC, SISMA V, 1
NAME=sisma 22, CONC, STRENGTH, 0, 0, , 0, 0
     RS, sisma_x, -0.3, RS, sisma_y, 1, ES, sisma_x, -0.3, ES, sisma_y, 1
     CBC, SISMA V, 1
NAME=sisma_23, CONC, STRENGTH, 0, 0, , 0, 0
     RS, sisma_x, -0.3, RS, sisma_y, 1, ES, sisma_x, 0.3, ES, sisma_y, -1
     CBC, SISMA V, 1
NAME=sisma 24, CONC, STRENGTH, 0, 0, , 0, 0
     RS, sisma_x, -0.3, RS, sisma_y, 1, ES, sisma_x, -0.3, ES, sisma_y, -1
     CBC, SISMA V, 1
NAME=sisma_25, CONC, STRENGTH, 0, 0, , 0, 0
     RS, sisma_x, 0.3, RS, sisma_y, -1, ES, sisma_x, 0.3, ES, sisma_y, 1
     CBC, SISMA V, 1
NAME=sisma_26, CONC, STRENGTH, 0, 0, , 0, 0
     RS, sisma_x, 0.3, RS, sisma_y, -1, ES, sisma_x, -0.3, ES, sisma_y, 1
     CBC, SISMA V, 1
NAME=sisma_27, CONC, STRENGTH, 0, 0, , 0, 0
     RS, sisma_x, 0.3, RS, sisma_y, -1, ES, sisma_x, 0.3, ES, sisma_y, -1
     CBC, SISMA V, 1
NAME=sisma_28, CONC, STRENGTH, 0, 0, , 0, 0
     RS, sisma_x, 0.3, RS, sisma_y, -1, ES, sisma_x, -0.3, ES, sisma_y, -1
     CBC, SISMA V, 1
NAME=sisma_29, CONC, STRENGTH, 0, 0, , 0, 0
     RS, sisma_x, -0.3, RS, sisma_y, -1, ES, sisma_x, 0.3, ES, sisma_y, 1
     CBC, SISMA V, 1
NAME=sisma_30, CONC, STRENGTH, 0, 0, , 0, 0
     RS, sisma_x, -0.3, RS, sisma_y, -1, ES, sisma_x, -0.3, ES, sisma_y, 1
     CBC, SISMA V, 1
NAME=sisma_31, CONC, STRENGTH, 0, 0, , 0, 0
```

```
        RS, sisma_x, -0.3, RS, sisma_y, -1, ES, sisma_x, 0.3, ES, sisma_y, -1
        CBC, SISMA V, 1
   NAME=sisma_32, CONC, STRENGTH, 0, 0, , 0, 0
        RS, sisma_x, -0.3, RS, sisma_y, -1, ES, sisma_x, -0.3, ES, sisma_y, -1
        CBC, SISMA V, 1
   NAME=ENVELOPE, CONC, SPECIAL, 0, 1, , 0, 0
        CBC, sisma_1, 1, CBC, sisma_2, 1, CBC, sisma_3, 1, CBC, sisma_4, 1
        CBC, sisma_5, 1, CBC, sisma_6, 1, CBC, sisma_7, 1, CBC, sisma_8, 1
        CBC, sisma_9, 1, CBC, sisma_10, 1, CBC, sisma_11, 1, CBC, sisma_12, 1
        CBC, sisma_13, 1, CBC, sisma_14, 1, CBC, sisma_15, 1, CBC, sisma_16, 1
        CBC, sisma_17, 1, CBC, sisma_18, 1, CBC, sisma_19, 1, CBC, sisma_20, 1
        CBC, sisma_21, 1, CBC, sisma_22, 1, CBC, sisma_23, 1, CBC, sisma_24, 1
        CBC, sisma_25, 1, CBC, sisma_26, 1, CBC, sisma_27, 1, CBC, sisma_28, 1
        CBC, sisma_29, 1, CBC, sisma_30, 1, CBC, sisma_31, 1, CBC, sisma_32, 1
   NAME=SLU, CONC, INACTIVE, 0, 0, , 0, 0
        ST, PP, 1.3, ST, G1+G2 copertura A, 4.81, ST, G1+G2 copertura B, 1.95
        ST, Q sottotetto, 0.75, ST, sporto gronda, 2.6, ST, Q neve, 1.86
        ST, travi, 3.9, ST, parapetto, 2.25, ST, muro, 5.98

*LC-COLOR    ; Diagram Color for Load Case
; ANAL, LCNAME, iR1(ALL), iG1(ALL), iB1(ALL), iR2(MIN), iG2(MIN), iB2(MIN), iR3(MAX),
iG2(MAX), iB2(MAX)
 ST, parapetto, 0, 128, 57, 192, 0, 128, 192, 0, 128
 ST, PP, 78, 0, 255, 255, 160, 255, 163, 255, 160
 PO, GU1 +Y, 192, 0, 128, 255, 0, 192, 255, 160, 255
 CBC, SISMA V, 212, 160, 255, 148, 87, 255, 148, 87, 255
 CBC, sisma_1, 160, 192, 255, 255, 192, 160, 0, 128, 192
 PO, GU1 -Y, 0, 157, 192, 255, 160, 255, 93, 255, 87
 CBC, sisma_2, 255, 255, 87, 192, 0, 128, 255, 87, 128
 RS, sisma_x, 0, 128, 57, 192, 128, 0, 163, 255, 160
 ES, sisma_x, 0, 157, 192, 78, 0, 255, 163, 255, 160
 RS, sisma_y, 192, 0, 128, 163, 160, 255, 163, 255, 160
 ES, sisma_y, 192, 72, 0, 255, 87, 128, 210, 210, 210
 CBC, sisma_3, 0, 128, 57, 192, 72, 0, 192, 0, 128
 CBC, sisma_4, 160, 255, 255, 255, 160, 255, 163, 255, 160
 CBC, sisma_5, 0, 128, 192, 0, 192, 192, 163, 160, 255
 CBC, sisma_6, 255, 192, 87, 192, 128, 0, 255, 128, 0
 CBC, sisma_7, 0, 192, 192, 255, 0, 192, 255, 128, 0
 CBC, sisma_8, 146, 0, 255, 0, 128, 255, 255, 192, 87
 CBC, sisma_9, 78, 0, 255, 0, 192, 128, 128, 192, 0
 CBC, sisma_10, 192, 72, 0, 192, 128, 0, 255, 128, 0
 CBC, sisma_11, 255, 192, 160, 192, 0, 192, 0, 128, 57
 CBC, sisma_12, 192, 0, 128, 146, 0, 255, 255, 255, 255
 CBC, sisma_13, 255, 0, 128, 78, 0, 255, 212, 160, 255
 CBC, sisma_14, 255, 87, 87, 85, 192, 0, 146, 0, 255
 CBC, sisma_15, 0, 128, 128, 255, 160, 255, 255, 128, 0
 CBC, sisma_16, 163, 255, 160, 0, 128, 57, 160, 192, 255
 CBC, sisma_17, 192, 0, 192, 160, 192, 255, 192, 72, 0
 CBC, sisma_18, 148, 87, 255, 192, 0, 192, 255, 160, 255
 CBC, sisma_19, 0, 128, 192, 212, 160, 255, 0, 128, 128
 CBC, sisma_20, 192, 192, 0, 192, 0, 128, 78, 0, 255
 CBC, sisma_21, 0, 192, 128, 0, 128, 128, 255, 255, 87
 CBC, sisma_22, 78, 0, 255, 192, 128, 0, 192, 128, 0
 CBC, sisma_23, 255, 0, 128, 255, 128, 0, 0, 128, 57
 CBC, sisma_24, 192, 72, 0, 210, 210, 210, 163, 255, 160
 CBC, sisma_25, 192, 192, 0, 148, 87, 255, 0, 128, 255
 CBC, sisma_26, 146, 0, 255, 192, 0, 128, 0, 192, 128
 CBC, sisma_27, 163, 255, 160, 255, 255, 255, 78, 0, 255
 CBC, sisma_28, 148, 87, 255, 255, 255, 255, 85, 0, 192
 CBC, sisma_29, 255, 160, 255, 255, 192, 87, 85, 192, 0
 CBC, sisma_30, 192, 192, 192, 192, 192, 0, 192, 0, 192
 CBC, sisma_31, 85, 0, 192, 85, 0, 192, 255, 160, 255
```

```
 CBC, sisma_32, 78, 0, 255, 0, 128, 128, 128, 192, 0
 CBC, ENVELOPE, 163, 160, 255, 192, 192, 192, 160, 192, 255
 CBC, SLU, 163, 255, 160, 255, 255, 255, 192, 72, 0
 ST, G1+G2 copertura A, 163, 255, 160, 255, 255, 255, 255, 255, 87
 PO, GU2 +Y, 146, 0, 255, 85, 192, 0, 255, 192, 160
 ST, G1+G2 copertura B, 148, 87, 255, 192, 128, 0, 255, 255, 255
 PO, GU2 -Y, 255, 192, 160, 0, 128, 128, 255, 0, 192
 ST, muro, 163, 255, 160, 255, 192, 160, 85, 0, 192
 ST, Q sottotetto, 255, 192, 87, 255, 87, 87, 192, 0, 192
 ST, sporto gronda, 0, 192, 128, 146, 0, 255, 148, 87, 255
 ST, Q neve, 128, 192, 0, 255, 192, 87, 192, 72, 0
 ST, SISMA X, 255, 255, 87, 192, 128, 0, 192, 192, 0
 ST, SISMA Y, 255, 87, 87, 163, 255, 160, 0, 128, 57
 ST, travi, 160, 255, 255, 85, 192, 0, 160, 192, 255

*EIGEN-CTRL    ; Eigenvalue Analysis Control
; TYPE, iFREQ, iITER, iDIM, TOL, bMINMAX, FRMIN, FRMAX, bSTRUM   ; TYPE=EIGEN
; TYPE, bINCNL, iGNUM                                            ; TYPE=RITZ(line 1)
;       KIND1, CASE1/GROUND1, iNOG1, ...                         ; TYPE=RITZ(from line
2)
   LANCZOS, 25, 20, 1, 1e-010, NO, 0, 0, NO

*DGN-MATL    ; Modify Steel(Concrete) Material
; iMAT, TYPE, MNAME, [DATA1]                                    ; STEEL
; iMAT, TYPE, MNAME, [DATA2], [R-DATA], FCI, bSERV, SHORT, LONG ; CONC
; iMAT, TYPE, MNAME, [DATA3], [DATA2], [R-DATA]                 ; SRC
; iMAT, TYPE, MNAME, [DATA5]                                    ; STEEL(None) & KSCE-A
SD05
; [DATA1] : 1, DB, CODE, NAME or 2, ELAST, POISN, FU, FY1, FY2, FY3, FY4
;           FY5, FY6, AFT, AFT2, AFT3, FY, AFV, AFV2, AFV3
; [DATA2] : 1, DB, CODE, NAME or 2, FC, CHK, LAMBDA
; [DATA3] : 1, DB, CODE, NAME or 2, ELAST, FU, FY1, FY2, FY3, FY4
;              FY5, FY6, AFT, AFT2, AFT3, FY, AFV, AFV2, AFV3
; [DATA4] : 1, DB, CODE, NAME or 2, FC
; [DATA5] : 3, ELAST, POISN, AL1, AL2, AL3, AL4, AL5, AL6, AL7, AL8, AL9, AL10
;              MIN1, MIN2, MIN3
; [R-DATA]: RBCODE, RBMAIN, RBSUB, FY(R), FYS
    6, CONC , C16/20            , 1, EN04(RC)   ,            ,C16/20        , NO, 1, ,
 , , 0, 0, 11200, NO, 0, 0,            ,            ,              , 0, NO, 1, , , , 0
, 0, 0

*ENDDATA
```

**PROJECT TITLE :**

| | Company | | Client | |
|---|---|---|---|---|
| MIDAS | Author | Nicola | File Name | allin - scuola muscoline - VV - PO - 00.txt |

```
 ** midas Gen Pushover Curve Data **
_____________________________________________

[ Target Displacement ]
* Disp. Control Node : 192
* Direction : DY
* Load Pattern Type : Accerelation
* SLO- Demand, Capacity, Step, Remark : 0.017454, 0.014975, 83, N/A
* SLD- Demand, Capacity, Step, Remark : 0.017454, 0.022350, 83, OK
* SLV- Demand, Capacity, Step, Remark : 0.017454, -, 83, -
* SLC- Demand, Capacity, Step, Remark : 0.017454, -, 83, -
_____________________________________________

- Target Displacement of SLO
  m* = 12.5469
  Gamma = 1
  Fy* = 24.3619
  T* = 0.277746
  Se(T*) = 0.648g
  det* = 0.0124166
  qu = 3.2726
  Tc = 0.44
  dt* = 0.0174537 (short period range)
  dt = 0.0174537

- Target Displacement of SLD
  m* = 12.5469
  Gamma = 1
  Fy* = 24.3619
  T* = 0.277746
  Se(T*) = 0.648g
  det* = 0.0124166
  qu = 3.2726
  Tc = 0.44
  dt* = 0.0174537 (short period range)
  dt = 0.0174537

- Target Displacement of SLV
  m* = 12.5469
  Gamma = 1
  Fy* = 24.3619
  T* = 0.277746
  Se(T*) = 0.648g
  det* = 0.0124166
  qu = 3.2726
  Tc = 0.44
  dt* = 0.0174537 (short period range)
  dt = 0.0174537

- Target Displacement of SLC
  m* = 12.5469
  Gamma = 1
  Fy* = 24.3619
  T* = 0.277746
  Se(T*) = 0.648g
  det* = 0.0124166
  qu = 3.2726
  Tc = 0.44
  dt* = 0.0174537 (short period range)
  dt = 0.0174537
_____________________________________________

[ Spectral Displacement(Sd) vs. Spectral Acceleration(Sa) ]

Load Case :GU2 +Y   Unit:  kN,m


 Node : 192   Direction : DY   Mode 1
```

**PROJECT TITLE :**

| | | | | |
|---|---|---|---|---|
| MIDAS | Company | | Client | |
| | Author | Nicola | File Name | allin - scuola muscoline - VV - PO - 00.txt |

| Step<br>Status of Step | Spectral Displacement(Sd) | Spectral Acceleration(Sa) |
|---|---|---|
| 0 | 1.50000e-005 | 9.75513e-004 |
| 1 | 1.50000e-004 | 9.75513e-003 |
| 2 | 3.00000e-004 | 1.95103e-002 |
| 3 | 4.50000e-004 | 2.92654e-002 |
| 4 | 6.00000e-004 | 3.90205e-002 |
| 5 | 7.50000e-004 | 4.87756e-002 |
| 6 | 9.00000e-004 | 5.85308e-002 |
| 7 | 1.05000e-003 | 6.82859e-002 |
| 8 | 1.20000e-003 | 7.80410e-002 |
| 9 | 1.35000e-003 | 8.77962e-002 |
| 10 | 1.50000e-003 | 9.31957e-002 |
| 11 | 1.65000e-003 | 9.85951e-002 |
| 12 | 1.80000e-003 | 1.03994e-001 |
| 13 | 1.95000e-003 | 1.09394e-001 |
| 14 | 2.10000e-003 | 1.14793e-001 |
| 15 | 2.25000e-003 | 1.20192e-001 |
| 16 | 2.40000e-003 | 1.25592e-001 |
| 17 | 2.55000e-003 | 1.30991e-001 |
| 18 | 2.70000e-003 | 1.36390e-001 |
| 19 | 2.85000e-003 | 1.41789e-001 |
| 20 | 3.00000e-003 | 1.47189e-001 |
| 21 | 3.15000e-003 | 1.51207e-001 |
| 22 | 3.30000e-003 | 1.53721e-001 |
| 23 | 3.45000e-003 | 1.56235e-001 |
| 24 | 3.60000e-003 | 1.58749e-001 |
| 25 | 3.75000e-003 | 1.61263e-001 |
| 26 | 3.90000e-003 | 1.63777e-001 |
| 27 | 4.05000e-003 | 1.66291e-001 |
| 28 | 4.20000e-003 | 1.68805e-001 |
| 29 | 4.35000e-003 | 1.71319e-001 |
| 30 | 4.50000e-003 | 1.73833e-001 |
| 31 | 4.65000e-003 | 1.76347e-001 |

**PROJECT TITLE :**

| | Company | | Client | |
|---|---|---|---|---|
| MIDAS | Author | Nicola | File Name | allin - scuola muscoline - VV - PO - 00.txt |

| | | |
|---|---|---|
| 32 | 4.80000e-003 | 1.78861e-001 |
| 33 | 4.95000e-003 | 1.81374e-001 |
| 34 | 5.10000e-003 | 1.83888e-001 |
| 35 | 5.25000e-003 | 1.86402e-001 |
| 36 | 5.40000e-003 | 1.88916e-001 |
| 37 | 5.55000e-003 | 1.89860e-001 |
| 38 | 5.70000e-003 | 1.90045e-001 |
| 39 | 5.85000e-003 | 1.90230e-001 |
| 40 | 6.00000e-003 | 1.90416e-001 |
| 41 | 6.15000e-003 | 1.90601e-001 |
| 42 | 6.30000e-003 | 1.90786e-001 |
| 43 | 6.45000e-003 | 1.90971e-001 |
| 44 | 6.60000e-003 | 1.91156e-001 |
| 45 | 6.75000e-003 | 1.91341e-001 |
| 46 | 6.90000e-003 | 1.91526e-001 |
| 47 | 7.05000e-003 | 1.91711e-001 |
| 48 | 7.20000e-003 | 1.91896e-001 |
| 49 | 7.35000e-003 | 1.92081e-001 |
| 50 | 7.50000e-003 | 1.92266e-001 |
| 51 | 7.65000e-003 | 1.92451e-001 |
| 52 | 7.80000e-003 | 1.92636e-001 |
| 53 | 7.95000e-003 | 1.92821e-001 |
| 54 | 8.10000e-003 | 1.93006e-001 |
| 55 | 8.25000e-003 | 1.93191e-001 |
| 56 | 8.40000e-003 | 1.93376e-001 |
| 57 | 8.55000e-003 | 1.93561e-001 |
| 58 | 8.70000e-003 | 1.93746e-001 |
| 59 | 8.85000e-003 | 1.93931e-001 |
| 60 | 9.00000e-003 | 1.94116e-001 |
| 61 | 9.15000e-003 | 1.94301e-001 |
| 62 | 9.30000e-003 | 1.94486e-001 |
| 63 | 9.45000e-003 | 1.94671e-001 |
| 64 | 9.60000e-003 | 1.94856e-001 |
| 65 | 9.75000e-003 | 1.95041e-001 |
| 66 | 9.90000e-003 | 1.95226e-001 |

| | | | |
|---|---|---|---|
| 67 | 1.00500e-002 | 1.95411e-001 | |
| 68 | 1.02000e-002 | 1.95595e-001 | |
| 69 | 1.03500e-002 | 1.95780e-001 | |
| 70 | 1.05000e-002 | 1.95965e-001 | |
| 71 | 1.06500e-002 | 1.96150e-001 | |
| 72 | 1.08000e-002 | 1.96335e-001 | |
| 73 | 1.09500e-002 | 1.96520e-001 | |
| 74 | 1.11000e-002 | 1.96705e-001 | |
| 75 | 1.12500e-002 | 1.96890e-001 | |
| 76 | 1.14000e-002 | 1.97075e-001 | |
| 77 | 1.15500e-002 | 1.97260e-001 | |
| 78 | 1.17000e-002 | 1.97445e-001 | |
| 79 | 1.18500e-002 | 1.97630e-001 | |
| 80 | 1.20000e-002 | 1.97815e-001 | |
| 81 | 1.21500e-002 | 1.98000e-001 | |
| 82 | 1.23000e-002 | 1.98185e-001 | |
| 83 | 1.24500e-002 | 1.98370e-001 | SLO(Dem.)SLD(Dem.)SLV(Dem.)SLC(Dem.) |
| 84 | 1.26000e-002 | 1.98555e-001 | |
| 85 | 1.27500e-002 | 1.98740e-001 | |
| 86 | 1.29000e-002 | 1.98925e-001 | |
| 87 | 1.30500e-002 | 1.99110e-001 | |
| 88 | 1.32000e-002 | 1.99295e-001 | |
| 89 | 1.33500e-002 | 1.99480e-001 | |
| 90 | 1.35000e-002 | 1.99665e-001 | |
| 91 | 1.36500e-002 | 1.99850e-001 | |
| 92 | 1.38000e-002 | 2.00035e-001 | |
| 93 | 1.39500e-002 | 2.00220e-001 | |
| 94 | 1.41000e-002 | 2.00405e-001 | |
| 95 | 1.42500e-002 | 2.00590e-001 | |
| 96 | 1.44000e-002 | 2.00775e-001 | |
| 97 | 1.45500e-002 | 2.00960e-001 | |
| 98 | 1.47000e-002 | 2.01145e-001 | |
| 99 | 1.48500e-002 | 2.01330e-001 | |
| 100 | 1.50000e-002 | 2.01515e-001 | |

**PROJECT TITLE :**

| | | | | |
|---|---|---|---|---|
| MIDAS | Company | | Client | |
| | Author | Nicola | File Name | allin - scuola muscoline - VV - PO - 00.txt |

| | | |
|---|---|---|
| 101 | 1.51500e-002 | 2.01700e-001 |
| 102 | 1.53000e-002 | 2.01885e-001 |
| 103 | 1.54500e-002 | 2.02070e-001 |
| 104 | 1.56000e-002 | 2.02255e-001 |
| 105 | 1.57500e-002 | 2.02440e-001 |
| 106 | 1.59000e-002 | 2.02625e-001 |
| 107 | 1.60500e-002 | 2.02809e-001 |
| 108 | 1.62000e-002 | 2.02994e-001 |
| 109 | 1.63500e-002 | 2.03179e-001 |
| 110 | 1.65000e-002 | 2.03364e-001 |
| 111 | 1.66500e-002 | 2.03549e-001 |
| 112 | 1.68000e-002 | 2.03734e-001 |
| 113 | 1.69500e-002 | 2.03919e-001 |
| 114 | 1.71000e-002 | 2.04104e-001 |
| 115 | 1.72500e-002 | 2.04289e-001 |
| 116 | 1.74000e-002 | 2.04474e-001 |
| 117 | 1.75500e-002 | 2.04659e-001 |
| 118 | 1.77000e-002 | 2.04844e-001 |
| 119 | 1.78500e-002 | 2.05029e-001 |
| 120 | 1.80000e-002 | 2.05214e-001 |
| 121 | 1.81500e-002 | 2.05399e-001 |
| 122 | 1.83000e-002 | 2.05584e-001 |
| 123 | 1.84500e-002 | 2.05769e-001 |
| 124 | 1.86000e-002 | 2.05954e-001 |
| 125 | 1.87500e-002 | 2.06139e-001 |
| 126 | 1.89000e-002 | 2.06324e-001 |
| 127 | 1.90500e-002 | 2.06509e-001 |
| 128 | 1.92000e-002 | 2.06694e-001 |
| 129 | 1.93500e-002 | 2.06879e-001 |
| 130 | 1.95000e-002 | 2.07064e-001 |
| 131 | 1.96500e-002 | 2.07249e-001 |
| 132 | 1.98000e-002 | 2.07434e-001 |
| 133 | 1.99500e-002 | 2.07619e-001 |
| 134 | 2.01000e-002 | 2.07804e-001 |
| 135 | 2.02500e-002 | 2.07989e-001 |

| | | | |
|---|---|---|---|
| | 136 | 2.04000e-002 | 2.08174e-001 |
| | 137 | 2.05500e-002 | 2.08359e-001 |
| | 138 | 2.07000e-002 | 2.08544e-001 |
| | 139 | 2.08500e-002 | 2.08729e-001 |
| | 140 | 2.10000e-002 | 2.08913e-001 |
| | 141 | 2.11500e-002 | 2.09098e-001 |
| | 142 | 2.13000e-002 | 2.09283e-001 |
| | 143 | 2.14500e-002 | 2.09468e-001 |
| | 144 | 2.16000e-002 | 2.09653e-001 |
| | 145 | 2.17500e-002 | 2.09838e-001 |
| | 146 | 2.19000e-002 | 2.10023e-001 |
| | 147 | 2.20500e-002 | 2.10208e-001 |
| | 148 | 2.22000e-002 | 2.10393e-001 |
| | 149 | 2.23500e-002 | 2.10578e-001 |
| SLD(Cap.) | 150 | 2.25000e-002 | 1.72761e-001 |
| | 151 | 2.26500e-002 | 1.73395e-001 |
| | 152 | 2.28000e-002 | 1.73957e-001 |
| | 153 | 2.29500e-002 | 1.74518e-001 |
| | 154 | 2.31000e-002 | 1.74916e-001 |
| | 155 | 2.32500e-002 | 1.03062e-001 |
| | 156 | 2.34000e-002 | 1.03529e-001 |
| | 157 | 2.35500e-002 | 1.03996e-001 |
| | 158 | 2.37000e-002 | 1.04462e-001 |
| | 159 | 2.38500e-002 | 1.04929e-001 |
| | 160 | 2.40000e-002 | 1.05349e-001 |
| | 161 | 2.41500e-002 | 1.05720e-001 |
| | 162 | 2.43000e-002 | 1.06091e-001 |
| | 163 | 2.44500e-002 | 1.06462e-001 |
| | 164 | 2.46000e-002 | 1.06832e-001 |
| | 165 | 2.47500e-002 | 1.07203e-001 |
| | 166 | 2.49000e-002 | 1.07574e-001 |
| | 167 | 2.50500e-002 | 1.07945e-001 |
| | 168 | 2.52000e-002 | 1.08315e-001 |
| | 169 | 2.53500e-002 | 1.08686e-001 |

**PROJECT TITLE :**

| | Company | | Client | |
|---|---|---|---|---|
| MIDAS | Author | Nicola | File Name | allin - scuola muscoline - VV - PO - 00.txt |

| | | |
|---|---|---|
| 170 | 2.55000e-002 | 1.08978e-001 |
| 171 | 2.56500e-002 | 1.09157e-001 |
| 172 | 2.58000e-002 | 1.09335e-001 |
| 173 | 2.59500e-002 | 1.09514e-001 |
| 174 | 2.61000e-002 | 1.09693e-001 |
| 175 | 2.62500e-002 | 1.09871e-001 |
| 176 | 2.64000e-002 | 1.10050e-001 |
| 177 | 2.65500e-002 | 1.10229e-001 |
| 178 | 2.67000e-002 | 1.10407e-001 |
| 179 | 2.68500e-002 | 1.10586e-001 |
| 180 | 2.70000e-002 | 1.10764e-001 |
| 181 | 2.71500e-002 | 1.10943e-001 |
| 182 | 2.73000e-002 | 1.11122e-001 |
| 183 | 2.74500e-002 | 1.11300e-001 |
| 184 | 2.76000e-002 | 1.11479e-001 |
| 185 | 2.77500e-002 | 1.11657e-001 |
| 186 | 2.79000e-002 | 1.11836e-001 |
| 187 | 2.80500e-002 | 1.12015e-001 |
| 188 | 2.82000e-002 | 1.12193e-001 |
| 189 | 2.83500e-002 | 1.12372e-001 |
| 190 | 2.85000e-002 | 1.12550e-001 |
| 191 | 2.86500e-002 | 1.12729e-001 |
| 192 | 2.88000e-002 | 1.12907e-001 |
| 193 | 2.89500e-002 | 1.13086e-001 |
| 194 | 2.91000e-002 | 1.13265e-001 |
| 195 | 2.92500e-002 | 1.13443e-001 |
| 196 | 2.94000e-002 | 1.13622e-001 |
| 197 | 2.95500e-002 | 1.13800e-001 |
| 198 | 2.97000e-002 | 1.13979e-001 |
| 199 | 2.98500e-002 | 1.14157e-001 |
| 200 | 3.00000e-002 | 1.14336e-001 |

| | | |
|---|---|---|
| Min : | 1.50000e-005 | 9.75513e-004 |
| Max : | 2.23500e-002 | 2.10578e-001 |

**PROJECT TITLE :**

| | Company | | Client | |
|---|---|---|---|---|
| MIDAS | Author | Nicola | File Name | allin - scuola muscoline - VV - PO - 00.txt |

```
 ** midas Gen Pushover Curve Data **
_____________________________________________

[ Target Displacement ]
* Disp. Control Node : 192
* Direction : DY
* Load Pattern Type : Accerelation
* SLO- Demand, Capacity, Step, Remark : 0.015768, 0.014975, 71, N/A
* SLD- Demand, Capacity, Step, Remark : 0.015768, 0.022350, 71, OK
* SLV- Demand, Capacity, Step, Remark : 0.015768, -, 71, -
* SLC- Demand, Capacity, Step, Remark : 0.015768, -, 71, -
_____________________________________________

- Target Displacement of SLO
  m* = 12.5469
  Gamma = 1
  Fy* = 25.1584
  T* = 0.256409
  Se(T*) = 0.648g
  det* = 0.0105822
  qu = 3.169
  Tc = 0.44
  dt* = 0.0157681 (short period range)
  dt = 0.0157681

- Target Displacement of SLD
  m* = 12.5469
  Gamma = 1
  Fy* = 25.1584
  T* = 0.256409
  Se(T*) = 0.648g
  det* = 0.0105822
  qu = 3.169
  Tc = 0.44
  dt* = 0.0157681 (short period range)
  dt = 0.0157681

- Target Displacement of SLV
  m* = 12.5469
  Gamma = 1
  Fy* = 25.1584
  T* = 0.256409
  Se(T*) = 0.648g
  det* = 0.0105822
  qu = 3.169
  Tc = 0.44
  dt* = 0.0157681 (short period range)
  dt = 0.0157681

- Target Displacement of SLC
  m* = 12.5469
  Gamma = 1
  Fy* = 25.1584
  T* = 0.256409
  Se(T*) = 0.648g
  det* = 0.0105822
  qu = 3.169
  Tc = 0.44
  dt* = 0.0157681 (short period range)
  dt = 0.0157681
_____________________________________________

[ Spectral Displacement(Sd) vs. Spectral Acceleration(Sa) ]

Load Case :GU2 -Y   Unit:  kN,m


 Node : 192   Direction : DY   Mode 1
```

**PROJECT TITLE :**

| | | | | |
|---|---|---|---|---|
| MIDAS | Company | | Client | |
| | Author | Nicola | File Name | allin - scuola muscoline - VV - PO - 00.txt |

| Step<br>Status of Step | Spectral Displacement(Sd) | Spectral Acceleration(Sa) |
|---|---|---|
| 0 | 1.50000e-005 | 9.75512e-004 |
| 1 | 1.50000e-004 | 9.75512e-003 |
| 2 | 3.00000e-004 | 1.95103e-002 |
| 3 | 4.50000e-004 | 2.92654e-002 |
| 4 | 6.00000e-004 | 3.90205e-002 |
| 5 | 7.50000e-004 | 4.87756e-002 |
| 6 | 9.00000e-004 | 5.85308e-002 |
| 7 | 1.05000e-003 | 6.82859e-002 |
| 8 | 1.20000e-003 | 7.80410e-002 |
| 9 | 1.35000e-003 | 8.77962e-002 |
| 10 | 1.50000e-003 | 9.75513e-002 |
| 11 | 1.65000e-003 | 1.07306e-001 |
| 12 | 1.80000e-003 | 1.17062e-001 |
| 13 | 1.95000e-003 | 1.24208e-001 |
| 14 | 2.10000e-003 | 1.29608e-001 |
| 15 | 2.25000e-003 | 1.35007e-001 |
| 16 | 2.40000e-003 | 1.40407e-001 |
| 17 | 2.55000e-003 | 1.45806e-001 |
| 18 | 2.70000e-003 | 1.51206e-001 |
| 19 | 2.85000e-003 | 1.56605e-001 |
| 20 | 3.00000e-003 | 1.62004e-001 |
| 21 | 3.15000e-003 | 1.65707e-001 |
| 22 | 3.30000e-003 | 1.68221e-001 |
| 23 | 3.45000e-003 | 1.70735e-001 |
| 24 | 3.60000e-003 | 1.73249e-001 |
| 25 | 3.75000e-003 | 1.75763e-001 |
| 26 | 3.90000e-003 | 1.78277e-001 |
| 27 | 4.05000e-003 | 1.80791e-001 |
| 28 | 4.20000e-003 | 1.83305e-001 |
| 29 | 4.35000e-003 | 1.85819e-001 |
| 30 | 4.50000e-003 | 1.86983e-001 |
| 31 | 4.65000e-003 | 1.87805e-001 |

**PROJECT TITLE :**

| | Company | | Client | |
|---|---|---|---|---|
| MIDAS | Author | Nicola | File Name | allin - scuola muscoline - VV - PO - 00.txt |

| | | |
|---|---|---|
| 32 | 4.80000e-003 | 1.88628e-001 |
| 33 | 4.95000e-003 | 1.89450e-001 |
| 34 | 5.10000e-003 | 1.90272e-001 |
| 35 | 5.25000e-003 | 1.91094e-001 |
| 36 | 5.40000e-003 | 1.91916e-001 |
| 37 | 5.55000e-003 | 1.92738e-001 |
| 38 | 5.70000e-003 | 1.93560e-001 |
| 39 | 5.85000e-003 | 1.94382e-001 |
| 40 | 6.00000e-003 | 1.95204e-001 |
| 41 | 6.15000e-003 | 1.96026e-001 |
| 42 | 6.30000e-003 | 1.96848e-001 |
| 43 | 6.45000e-003 | 1.97670e-001 |
| 44 | 6.60000e-003 | 1.98492e-001 |
| 45 | 6.75000e-003 | 1.99180e-001 |
| 46 | 6.90000e-003 | 1.99365e-001 |
| 47 | 7.05000e-003 | 1.99550e-001 |
| 48 | 7.20000e-003 | 1.99735e-001 |
| 49 | 7.35000e-003 | 1.99920e-001 |
| 50 | 7.50000e-003 | 2.00105e-001 |
| 51 | 7.65000e-003 | 2.00291e-001 |
| 52 | 7.80000e-003 | 2.00476e-001 |
| 53 | 7.95000e-003 | 2.00661e-001 |
| 54 | 8.10000e-003 | 2.00846e-001 |
| 55 | 8.25000e-003 | 2.01031e-001 |
| 56 | 8.40000e-003 | 2.01216e-001 |
| 57 | 8.55000e-003 | 2.01401e-001 |
| 58 | 8.70000e-003 | 2.01586e-001 |
| 59 | 8.85000e-003 | 2.01771e-001 |
| 60 | 9.00000e-003 | 2.01956e-001 |
| 61 | 9.15000e-003 | 2.02141e-001 |
| 62 | 9.30000e-003 | 2.02326e-001 |
| 63 | 9.45000e-003 | 2.02511e-001 |
| 64 | 9.60000e-003 | 2.02696e-001 |
| 65 | 9.75000e-003 | 2.02881e-001 |
| 66 | 9.90000e-003 | 2.03066e-001 |

**PROJECT TITLE :**

| | Company | | Client | |
|---|---|---|---|---|
| MIDAS | Author | Nicola | File Name | allin - scuola muscoline - VV - PO - 00.txt |

| | | | |
|---|---|---|---|
| 67 | 1.00500e-002 | 2.03251e-001 | |
| 68 | 1.02000e-002 | 2.03436e-001 | |
| 69 | 1.03500e-002 | 2.03621e-001 | |
| 70 | 1.05000e-002 | 2.03807e-001 | |
| 71 | 1.06500e-002 | 2.03992e-001 | SLO(Dem.)SLD(Dem.)SLV(Dem.)SLC(Dem.) |
| 72 | 1.08000e-002 | 2.04177e-001 | |
| 73 | 1.09500e-002 | 2.04362e-001 | |
| 74 | 1.11000e-002 | 2.04547e-001 | |
| 75 | 1.12500e-002 | 2.04732e-001 | |
| 76 | 1.14000e-002 | 2.04917e-001 | |
| 77 | 1.15500e-002 | 2.05102e-001 | |
| 78 | 1.17000e-002 | 2.05287e-001 | |
| 79 | 1.18500e-002 | 2.05472e-001 | |
| 80 | 1.20000e-002 | 2.05657e-001 | |
| 81 | 1.21500e-002 | 2.05842e-001 | |
| 82 | 1.23000e-002 | 2.06027e-001 | |
| 83 | 1.24500e-002 | 2.06212e-001 | |
| 84 | 1.26000e-002 | 2.06397e-001 | |
| 85 | 1.27500e-002 | 2.06582e-001 | |
| 86 | 1.29000e-002 | 2.06767e-001 | |
| 87 | 1.30500e-002 | 2.06952e-001 | |
| 88 | 1.32000e-002 | 2.07137e-001 | |
| 89 | 1.33500e-002 | 2.07322e-001 | |
| 90 | 1.35000e-002 | 2.07507e-001 | |
| 91 | 1.36500e-002 | 2.07692e-001 | |
| 92 | 1.38000e-002 | 2.07877e-001 | |
| 93 | 1.39500e-002 | 2.08062e-001 | |
| 94 | 1.41000e-002 | 2.08247e-001 | |
| 95 | 1.42500e-002 | 2.08432e-001 | |
| 96 | 1.44000e-002 | 2.08617e-001 | |
| 97 | 1.45500e-002 | 2.08802e-001 | |
| 98 | 1.47000e-002 | 2.08988e-001 | |
| 99 | 1.48500e-002 | 2.09173e-001 | |
| 100 | 1.50000e-002 | 2.09358e-001 | |

**PROJECT TITLE :**

| | Company | | Client | |
|---|---|---|---|---|
| MIDAS | Author | Nicola | File Name | allin - scuola muscoline - VV - PO - 00.txt |

| | | |
|---|---|---|
| 101 | 1.51500e-002 | 2.09543e-001 |
| 102 | 1.53000e-002 | 2.09728e-001 |
| 103 | 1.54500e-002 | 2.09913e-001 |
| 104 | 1.56000e-002 | 2.10098e-001 |
| 105 | 1.57500e-002 | 2.10283e-001 |
| 106 | 1.59000e-002 | 2.10468e-001 |
| 107 | 1.60500e-002 | 2.10653e-001 |
| 108 | 1.62000e-002 | 2.10838e-001 |
| 109 | 1.63500e-002 | 2.11023e-001 |
| 110 | 1.65000e-002 | 2.11208e-001 |
| 111 | 1.66500e-002 | 2.11393e-001 |
| 112 | 1.68000e-002 | 2.11578e-001 |
| 113 | 1.69500e-002 | 2.11763e-001 |
| 114 | 1.71000e-002 | 2.11948e-001 |
| 115 | 1.72500e-002 | 2.12133e-001 |
| 116 | 1.74000e-002 | 2.12318e-001 |
| 117 | 1.75500e-002 | 2.12503e-001 |
| 118 | 1.77000e-002 | 2.12688e-001 |
| 119 | 1.78500e-002 | 2.12873e-001 |
| 120 | 1.80000e-002 | 2.13058e-001 |
| 121 | 1.81500e-002 | 2.13243e-001 |
| 122 | 1.83000e-002 | 2.13428e-001 |
| 123 | 1.84500e-002 | 2.13613e-001 |
| 124 | 1.86000e-002 | 2.13798e-001 |
| 125 | 1.87500e-002 | 2.13983e-001 |
| 126 | 1.89000e-002 | 2.14168e-001 |
| 127 | 1.90500e-002 | 2.14353e-001 |
| 128 | 1.92000e-002 | 2.14538e-001 |
| 129 | 1.93500e-002 | 2.14724e-001 |
| 130 | 1.95000e-002 | 2.14909e-001 |
| 131 | 1.96500e-002 | 2.15094e-001 |
| 132 | 1.98000e-002 | 2.15279e-001 |
| 133 | 1.99500e-002 | 2.15464e-001 |
| 134 | 2.01000e-002 | 2.15649e-001 |
| 135 | 2.02500e-002 | 2.15834e-001 |

| | | | |
|---|---|---|---|
| | 136 | 2.04000e-002 | 2.16019e-001 |
| | 137 | 2.05500e-002 | 2.16204e-001 |
| | 138 | 2.07000e-002 | 2.16389e-001 |
| | 139 | 2.08500e-002 | 2.16574e-001 |
| | 140 | 2.10000e-002 | 2.16759e-001 |
| | 141 | 2.11500e-002 | 2.16944e-001 |
| | 142 | 2.13000e-002 | 2.17129e-001 |
| | 143 | 2.14500e-002 | 2.17314e-001 |
| | 144 | 2.16000e-002 | 2.17499e-001 |
| | 145 | 2.17500e-002 | 2.17684e-001 |
| | 146 | 2.19000e-002 | 2.17869e-001 |
| | 147 | 2.20500e-002 | 2.18054e-001 |
| | 148 | 2.22000e-002 | 2.18239e-001 |
| | 149 | 2.23500e-002 | 2.18424e-001 |
| SLD(Cap.) | 150 | 2.25000e-002 | 1.80460e-001 |
| | 151 | 2.26500e-002 | 1.81451e-001 |
| | 152 | 2.28000e-002 | 1.82216e-001 |
| | 153 | 2.29500e-002 | 1.82981e-001 |
| | 154 | 2.31000e-002 | 1.83557e-001 |
| | 155 | 2.32500e-002 | 1.84024e-001 |
| | 156 | 2.34000e-002 | 1.84492e-001 |
| | 157 | 2.35500e-002 | 1.52701e-001 |
| | 158 | 2.37000e-002 | 1.53266e-001 |
| | 159 | 2.38500e-002 | 1.53832e-001 |
| | 160 | 2.40000e-002 | 1.20399e-001 |
| | 161 | 2.41500e-002 | 1.20964e-001 |
| | 162 | 2.43000e-002 | 1.21472e-001 |
| | 163 | 2.44500e-002 | 1.21939e-001 |
| | 164 | 2.46000e-002 | 1.22405e-001 |
| | 165 | 2.47500e-002 | 1.22792e-001 |
| | 166 | 2.49000e-002 | 1.22976e-001 |
| | 167 | 2.50500e-002 | 1.23160e-001 |
| | 168 | 2.52000e-002 | 1.23344e-001 |
| | 169 | 2.53500e-002 | 1.23528e-001 |

**PROJECT TITLE :**

| | Company | | Client | |
|---|---|---|---|---|
| MIDAS | Author | Nicola | File Name | allin - scuola muscoline - VV - PO - 00.txt |

| | | |
|---|---|---|
| 170 | 2.55000e-002 | 1.23712e-001 |
| 171 | 2.56500e-002 | 1.23896e-001 |
| 172 | 2.58000e-002 | 1.24080e-001 |
| 173 | 2.59500e-002 | 1.24264e-001 |
| 174 | 2.61000e-002 | 1.24448e-001 |
| 175 | 2.62500e-002 | 1.24632e-001 |
| 176 | 2.64000e-002 | 1.24816e-001 |
| 177 | 2.65500e-002 | 1.25000e-001 |
| 178 | 2.67000e-002 | 1.25184e-001 |
| 179 | 2.68500e-002 | 1.25368e-001 |
| 180 | 2.70000e-002 | 1.25552e-001 |
| 181 | 2.71500e-002 | 1.25736e-001 |
| 182 | 2.73000e-002 | 1.25920e-001 |
| 183 | 2.74500e-002 | 1.26104e-001 |
| 184 | 2.76000e-002 | 1.26288e-001 |
| 185 | 2.77500e-002 | 1.26472e-001 |
| 186 | 2.79000e-002 | 1.26656e-001 |
| 187 | 2.80500e-002 | 1.26840e-001 |
| 188 | 2.82000e-002 | 1.27024e-001 |
| 189 | 2.83500e-002 | 1.27208e-001 |
| 190 | 2.85000e-002 | 1.27392e-001 |
| 191 | 2.86500e-002 | 1.27576e-001 |
| 192 | 2.88000e-002 | 1.27760e-001 |
| 193 | 2.89500e-002 | 1.27943e-001 |
| 194 | 2.91000e-002 | 1.28127e-001 |
| 195 | 2.92500e-002 | 1.28311e-001 |
| 196 | 2.94000e-002 | 1.28325e-001 |
| 197 | 2.95500e-002 | 1.28327e-001 |
| 198 | 2.97000e-002 | 1.28329e-001 |
| 199 | 2.98500e-002 | 1.28330e-001 |
| 200 | 3.00000e-002 | 1.28332e-001 |

| | | |
|---|---|---|
| Min : | 1.50000e-005 | 9.75512e-004 |
| Max : | 2.23500e-002 | 2.18424e-001 |

# 2. PROGETTO DI INTERVENTO (ADEGUAMENTO SISMICO)

## 2.1. Reticolare atrio

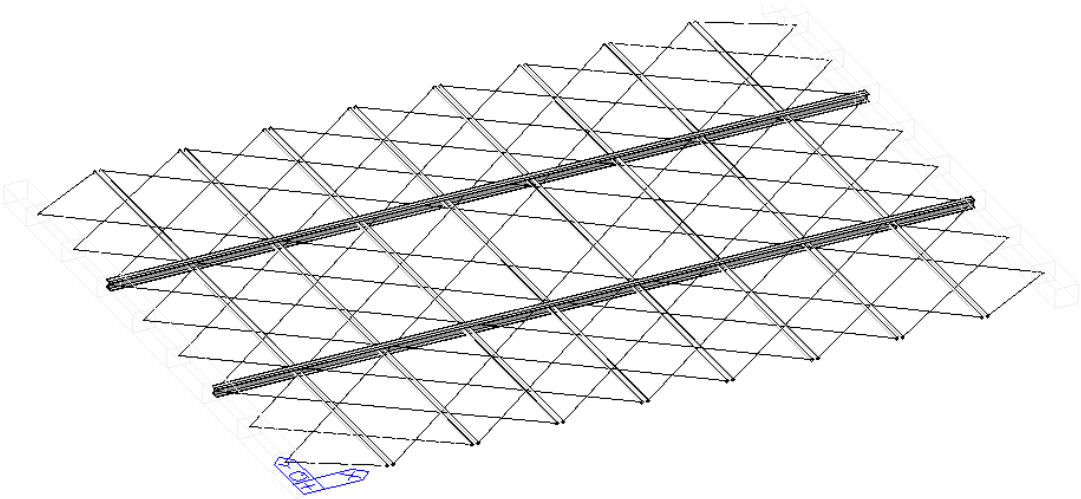

*Figura 4 – Nuovo sistema di controventamento.*

# Steel Checking Result

| | | | |
|---|---|---|---|
| Company | | Project Title | |
| Author | dimore01 | File Name | C:\...\US1\atrio\reticolare.mgb |

## 1. Design Information

Design Code : Eurocode3:05
Unit System : kN, m
Member No : 344
Material : S235_LC2 (No:3)
(Fy = 195833, Es = 210000000)
Section Name : tubolare (No:2)
(Built-up Section).
Member Length : 9.95000

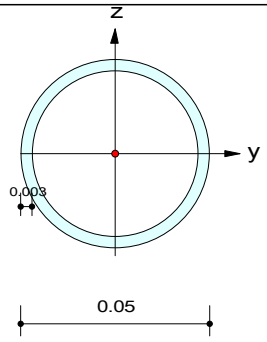


## 2. Member Forces

Axial Force Fxx = -7.2100 (LCB: 2, POS:1/2)
Bending Moments My = 0.00000, Mz = 0.00000
End Moments Myi = 0.00000, Myj = 0.00000 (for Lb)
Myi = 0.00000, Myj = 0.00000 (for Ly)
Mzi = 0.00000, Mzj = 0.00000 (for Lz)
Shear Forces Fyy = 0.00000 (LCB: 1, POS:1/2)
Fzz = 0.00000 (LCB: 1, POS:1/2)

| | | | |
|---|---|---|---|
| Outer Dia. | 0.05000 | Wall Thick | 0.00300 |
| Area | 0.00044 | Asz | 0.00022 |
| Qyb | 0.00055 | Qzb | 0.00055 |
| Iyy | 0.00000 | Izz | 0.00000 |
| Ybar | 0.02500 | Zbar | 0.02500 |
| Wely | 0.00000 | Welz | 0.00000 |
| ry | 0.01665 | rz | 0.01665 |

## 3. Design Parameters

Unbraced Lengths Ly = 1.26500, Lz = 1.26500, Lb = 1.26500
Effective Length Factors Ky = 1.00, Kz = 1.00
Equivalent Uniform Moment Factors Cmy = 1.00, Cmz = 1.00, CmLT = 1.00

## 4. Checking Results

Slenderness Ratio
KL/r = 76.0 < 200.0 (LCB: 2)..... O.K
Axial Resistance
N_Ed/MIN[Nc_Rd, Nb_Rd] = 7.2100/68.4832 = 0.105 < 1.000 ..... O.K
Bending Resistance
M_Edy/M_Rdy = 0.00000/1.23767 = 0.000 < 1.000 ..... O.K
M_Edz/M_Rdz = 0.00000/1.23767 = 0.000 < 1.000 ..... O.K
Combined Resistance
RNRd = MAX[ M_Edy/Mny_Rd, M_Edz/Mnz_Rd ]
Rcom = N_Ed/(A*fy/Gamma_M0), Rbend = M_Edy/My_Rd + M_Edz/Mz_Rd
Rc_LT1 = N_Ed/(Xiy*A*fy/Gamma_M1)
Rb_LT1 = (kyy*M_Edy)/(Xi_LT*Wply*fy/Gamma_M1) + (kyz*Msdz)/(Wplz*fy/Gamma_M1)
Rc_LT2 = N_Ed/(Xiz*A*fy/Gamma_M1)
Rb_LT2 = (Kzy*M_Edy)/(Xi_LT*Wply*fy/Gamma_M1) + (Kzz*Msdz)/(Wplz*fy/Gamma_M1)
Rmax = MAX[ RNRd, (Rcom+Rbend), MAX(Rc_LT1+Rb_LT1, Rc_LT2+Rb_LT2) ] = 0.105 < 1.000 .. O.K
Torsion Strength
T_Ed/T_Rd = 0.00000/1.05796 = 0.000 < 1.000 ..... O.K
Shear Resistance
V_Edy/Vy_Rd = 0.000 < 1.000 ..... O.K
V_Edz/Vz_Rd = 0.000 < 1.000 ..... O.K

# Steel Checking Result

| | | | |
|---|---|---|---|
| Company | | Project Title | |
| Author | dimore01 | File Name | C:\...\US1\atrio\reticolare.mgb |

## 1. Design Information

Design Code : Eurocode3:05
Unit System : kN, m
Member No : 311
Material : S235_LC2 (No:3)
(Fy = 195833, Es = 210000000)
Section Name : tubolare (No:2)
(Built-up Section).
Member Length : 9.95000

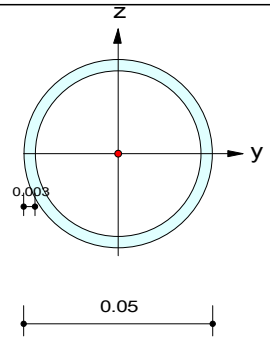


## 2. Member Forces

Axial Force Fxx = -8.3946 (LCB: 2, POS:1/2)
Bending Moments My = 0.00000, Mz = 0.00000
End Moments Myi = 0.00000, Myj = 0.00000 (for Lb)
Myi = 0.00000, Myj = 0.00000 (for Ly)
Mzi = 0.00000, Mzj = 0.00000 (for Lz)
Shear Forces Fyy = 0.00000 (LCB: 1, POS:1/2)
Fzz = 0.00000 (LCB: 1, POS:1/2)

| | | | |
|---|---|---|---|
| Outer Dia. | 0.05000 | Wall Thick | 0.00300 |
| Area | 0.00044 | Asz | 0.00022 |
| Qyb | 0.00055 | Qzb | 0.00055 |
| Iyy | 0.00000 | Izz | 0.00000 |
| Ybar | 0.02500 | Zbar | 0.02500 |
| Wely | 0.00000 | Welz | 0.00000 |
| ry | 0.01665 | rz | 0.01665 |

## 3. Design Parameters

Unbraced Lengths Ly = 1.26500, Lz = 1.26500, Lb = 1.26500
Effective Length Factors Ky = 1.00, Kz = 1.00
Equivalent Uniform Moment Factors Cmy = 1.00, Cmz = 1.00, CmLT = 1.00

## 4. Checking Results

Slenderness Ratio
KL/r = 76.0 < 200.0 (LCB: 2)..... O.K
Axial Resistance
N_Ed/MIN[Nc_Rd, Nb_Rd] = 8.3946/68.4832 = 0.123 < 1.000 ..... O.K
Bending Resistance
M_Edy/M_Rdy = 0.00000/1.23767 = 0.000 < 1.000 ..... O.K
M_Edz/M_Rdz = 0.00000/1.23767 = 0.000 < 1.000 ..... O.K
Combined Resistance
RNRd = MAX[ M_Edy/Mny_Rd, M_Edz/Mnz_Rd ]
Rcom = N_Ed/(A*fy/Gamma_M0), Rbend = M_Edy/My_Rd + M_Edz/Mz_Rd
Rc_LT1 = N_Ed/(Xiy*A*fy/Gamma_M1)
Rb_LT1 = (kyy*M_Edy)/(Xi_LT*Wply*fy/Gamma_M1) + (kyz*Msdz)/(Wplz*fy/Gamma_M1)
Rc_LT2 = N_Ed/(Xiz*A*fy/Gamma_M1)
Rb_LT2 = (Kzy*M_Edy)/(Xi_LT*Wply*fy/Gamma_M1) + (Kzz*Msdz)/(Wplz*fy/Gamma_M1)
Rmax = MAX[ RNRd, (Rcom+Rbend), MAX(Rc_LT1+Rb_LT1, Rc_LT2+Rb_LT2) ] = 0.123 < 1.000 .. O.K
Torsion Strength
T_Ed/T_Rd = 0.00000/1.05796 = 0.000 < 1.000 ..... O.K
Shear Resistance
V_Edy/Vy_Rd = 0.000 < 1.000 ..... O.K
V_Edz/Vz_Rd = 0.000 < 1.000 ..... O.K

# Steel Checking Result

| | | | |
|---|---|---|---|
| Company | | Project Title | |
| Author | dimore01 | File Name | C:\...\US1\atrio\reticolare.mgb |

## 1. Design Information

Design Code : Eurocode3:05
Unit System : kN, m
Member No : 278
Material : S235_LC2 (No:3)
(Fy = 195833, Es = 210000000)
Section Name : tubolare (No:2)
(Built-up Section).
Member Length : 9.95000

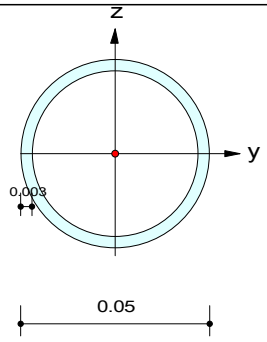


## 2. Member Forces

Axial Force Fxx = -7.2100 (LCB: 2, POS:1/2)
Bending Moments My = 0.00000, Mz = 0.00000
End Moments Myi = 0.00000, Myj = 0.00000 (for Lb)
Myi = 0.00000, Myj = 0.00000 (for Ly)
Mzi = 0.00000, Mzj = 0.00000 (for Lz)
Shear Forces Fyy = 0.00000 (LCB: 1, POS:1/2)
Fzz = 0.00000 (LCB: 1, POS:1/2)

| | | | |
|---|---|---|---|
| Outer Dia. | 0.05000 | Wall Thick | 0.00300 |
| Area | 0.00044 | Asz | 0.00022 |
| Qyb | 0.00055 | Qzb | 0.00055 |
| Iyy | 0.00000 | Izz | 0.00000 |
| Ybar | 0.02500 | Zbar | 0.02500 |
| Wely | 0.00000 | Welz | 0.00000 |
| ry | 0.01665 | rz | 0.01665 |

## 3. Design Parameters

Unbraced Lengths Ly = 1.26500, Lz = 1.26500, Lb = 1.26500
Effective Length Factors Ky = 1.00, Kz = 1.00
Equivalent Uniform Moment Factors Cmy = 1.00, Cmz = 1.00, CmLT = 1.00

## 4. Checking Results

Slenderness Ratio
KL/r = 76.0 < 200.0 (LCB: 2)..... O.K
Axial Resistance
N_Ed/MIN[Nc_Rd, Nb_Rd] = 7.2100/68.4832 = 0.105 < 1.000 ..... O.K
Bending Resistance
M_Edy/M_Rdy = 0.00000/1.23767 = 0.000 < 1.000 ..... O.K
M_Edz/M_Rdz = 0.00000/1.23767 = 0.000 < 1.000 ..... O.K
Combined Resistance
RNRd = MAX[ M_Edy/Mny_Rd, M_Edz/Mnz_Rd ]
Rcom = N_Ed/(A*fy/Gamma_M0), Rbend = M_Edy/My_Rd + M_Edz/Mz_Rd
Rc_LT1 = N_Ed/(Xiy*A*fy/Gamma_M1)
Rb_LT1 = (kyy*M_Edy)/(Xi_LT*Wply*fy/Gamma_M1) + (kyz*Msdz)/(Wplz*fy/Gamma_M1)
Rc_LT2 = N_Ed/(Xiz*A*fy/Gamma_M1)
Rb_LT2 = (Kzy*M_Edy)/(Xi_LT*Wply*fy/Gamma_M1) + (Kzz*Msdz)/(Wplz*fy/Gamma_M1)
Rmax = MAX[ RNRd, (Rcom+Rbend), MAX(Rc_LT1+Rb_LT1, Rc_LT2+Rb_LT2) ] = 0.105 < 1.000 .. O.K
Torsion Strength
T_Ed/T_Rd = 0.00000/1.05796 = 0.000 < 1.000 ..... O.K
Shear Resistance
V_Edy/Vy_Rd = 0.000 < 1.000 ..... O.K
V_Edz/Vz_Rd = 0.000 < 1.000 ..... O.K

# Steel Checking Result

| | | | |
|---|---|---|---|
| Company | | Project Title | |
| Author | dimore01 | File Name | C:\...\US1\atrio\reticolare.mgb |

## 1. Design Information

Design Code : Eurocode3:05
Unit System : kN, m
Member No : 245
Material : S235_LC2 (No:3)
(Fy = 195833, Es = 210000000)
Section Name : tubolare (No:2)
(Built-up Section).
Member Length : 9.95000

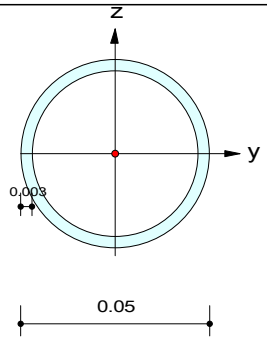


## 2. Member Forces

Axial Force Fxx = -8.0771 (LCB: 2, POS:1/2)
Bending Moments My = 0.00000, Mz = 0.00000
End Moments Myi = 0.00000, Myj = 0.00000 (for Lb)
Myi = 0.00000, Myj = 0.00000 (for Ly)
Mzi = 0.00000, Mzj = 0.00000 (for Lz)
Shear Forces Fyy = 0.00000 (LCB: 1, POS:1/2)
Fzz = 0.00000 (LCB: 1, POS:1/2)

| | | | |
|---|---|---|---|
| Outer Dia. | 0.05000 | Wall Thick | 0.00300 |
| Area | 0.00044 | Asz | 0.00022 |
| Qyb | 0.00055 | Qzb | 0.00055 |
| Iyy | 0.00000 | Izz | 0.00000 |
| Ybar | 0.02500 | Zbar | 0.02500 |
| Wely | 0.00000 | Welz | 0.00000 |
| ry | 0.01665 | rz | 0.01665 |

## 3. Design Parameters

Unbraced Lengths Ly = 1.26500, Lz = 1.26500, Lb = 1.26500
Effective Length Factors Ky = 1.00, Kz = 1.00
Equivalent Uniform Moment Factors Cmy = 1.00, Cmz = 1.00, CmLT = 1.00

## 4. Checking Results

Slenderness Ratio
KL/r = 76.0 < 200.0 (LCB: 2)..... O.K
Axial Resistance
N_Ed/MIN[Nc_Rd, Nb_Rd] = 8.0771/68.4832 = 0.118 < 1.000 ..... O.K
Bending Resistance
M_Edy/M_Rdy = 0.00000/1.23767 = 0.000 < 1.000 ..... O.K
M_Edz/M_Rdz = 0.00000/1.23767 = 0.000 < 1.000 ..... O.K
Combined Resistance
RNRd = MAX[ M_Edy/Mny_Rd, M_Edz/Mnz_Rd ]
Rcom = N_Ed/(A*fy/Gamma_M0), Rbend = M_Edy/My_Rd + M_Edz/Mz_Rd
Rc_LT1 = N_Ed/(Xiy*A*fy/Gamma_M1)
Rb_LT1 = (kyy*M_Edy)/(Xi_LT*Wply*fy/Gamma_M1) + (kyz*Msdz)/(Wplz*fy/Gamma_M1)
Rc_LT2 = N_Ed/(Xiz*A*fy/Gamma_M1)
Rb_LT2 = (Kzy*M_Edy)/(Xi_LT*Wply*fy/Gamma_M1) + (Kzz*Msdz)/(Wplz*fy/Gamma_M1)
Rmax = MAX[ RNRd, (Rcom+Rbend), MAX(Rc_LT1+Rb_LT1, Rc_LT2+Rb_LT2) ] = 0.118 < 1.000 .. O.K
Torsion Strength
T_Ed/T_Rd = 0.00000/1.05796 = 0.000 < 1.000 ..... O.K
Shear Resistance
V_Edy/Vy_Rd = 0.000 < 1.000 ..... O.K
V_Edz/Vz_Rd = 0.000 < 1.000 ..... O.K

# Steel Checking Result

| | | | |
|---|---|---|---|
| Company | | Project Title | |
| Author | dimore01 | File Name | C:\...\US1\atrio\reticolare.mgb |

## 1. Design Information

Design Code : Eurocode3:05
Unit System : kN, m
Member No : 212
Material : S235_LC2 (No:3)
(Fy = 195833, Es = 210000000)
Section Name : tubolare (No:2)
(Built-up Section).
Member Length : 9.95000

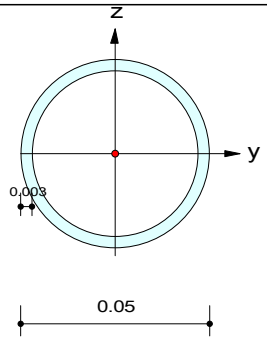


## 2. Member Forces

Axial Force Fxx = -7.2100 (LCB: 2, POS:1/2)
Bending Moments My = 0.00000, Mz = 0.00000
End Moments Myi = 0.00000, Myj = 0.00000 (for Lb)
Myi = 0.00000, Myj = 0.00000 (for Ly)
Mzi = 0.00000, Mzj = 0.00000 (for Lz)
Shear Forces Fyy = 0.00000 (LCB: 1, POS:1/2)
Fzz = 0.00000 (LCB: 1, POS:1/2)

| | | | |
|---|---|---|---|
| Outer Dia. | 0.05000 | Wall Thick | 0.00300 |
| Area | 0.00044 | Asz | 0.00022 |
| Qyb | 0.00055 | Qzb | 0.00055 |
| Iyy | 0.00000 | Izz | 0.00000 |
| Ybar | 0.02500 | Zbar | 0.02500 |
| Wely | 0.00000 | Welz | 0.00000 |
| ry | 0.01665 | rz | 0.01665 |

## 3. Design Parameters

Unbraced Lengths Ly = 1.26500, Lz = 1.26500, Lb = 1.26500
Effective Length Factors Ky = 1.00, Kz = 1.00
Equivalent Uniform Moment Factors Cmy = 1.00, Cmz = 1.00, CmLT = 1.00

## 4. Checking Results

Slenderness Ratio
KL/r = 76.0 < 200.0 (LCB: 2)..... O.K
Axial Resistance
N_Ed/MIN[Nc_Rd, Nb_Rd] = 7.2100/68.4832 = 0.105 < 1.000 ..... O.K
Bending Resistance
M_Edy/M_Rdy = 0.00000/1.23767 = 0.000 < 1.000 ..... O.K
M_Edz/M_Rdz = 0.00000/1.23767 = 0.000 < 1.000 ..... O.K
Combined Resistance
RNRd = MAX[ M_Edy/Mny_Rd, M_Edz/Mnz_Rd ]
Rcom = N_Ed/(A*fy/Gamma_M0), Rbend = M_Edy/My_Rd + M_Edz/Mz_Rd
Rc_LT1 = N_Ed/(Xiy*A*fy/Gamma_M1)
Rb_LT1 = (kyy*M_Edy)/(Xi_LT*Wply*fy/Gamma_M1) + (kyz*Msdz)/(Wplz*fy/Gamma_M1)
Rc_LT2 = N_Ed/(Xiz*A*fy/Gamma_M1)
Rb_LT2 = (Kzy*M_Edy)/(Xi_LT*Wply*fy/Gamma_M1) + (Kzz*Msdz)/(Wplz*fy/Gamma_M1)
Rmax = MAX[ RNRd, (Rcom+Rbend), MAX(Rc_LT1+Rb_LT1, Rc_LT2+Rb_LT2) ] = 0.105 < 1.000 .. O.K
Torsion Strength
T_Ed/T_Rd = 0.00000/1.05796 = 0.000 < 1.000 ..... O.K
Shear Resistance
V_Edy/Vy_Rd = 0.000 < 1.000 ..... O.K
V_Edz/Vz_Rd = 0.000 < 1.000 ..... O.K

# Steel Checking Result

| | | | |
|---|---|---|---|
| Company | | Project Title | |
| Author | dimore01 | File Name | C:\...\US1\atrio\reticolare.mgb |

## 1. Design Information

Design Code : Eurocode3:05
Unit System : kN, m
Member No : 179
Material : S235_LC2 (No:3)
(Fy = 195833, Es = 210000000)
Section Name : tubolare (No:2)
(Built-up Section).
Member Length : 9.95000

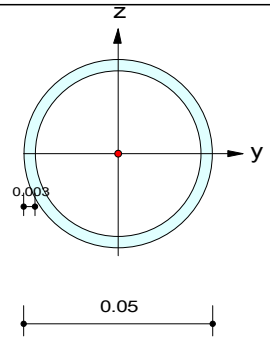


## 2. Member Forces

Axial Force Fxx = -7.7127 (LCB: 2, POS:1/2)
Bending Moments My = 0.00000, Mz = 0.00000
End Moments Myi = 0.00000, Myj = 0.00000 (for Lb)
Myi = 0.00000, Myj = 0.00000 (for Ly)
Mzi = 0.00000, Mzj = 0.00000 (for Lz)
Shear Forces Fyy = 0.00000 (LCB: 1, POS:1/2)
Fzz = 0.00000 (LCB: 1, POS:1/2)

| | | | |
|---|---|---|---|
| Outer Dia. | 0.05000 | Wall Thick | 0.00300 |
| Area | 0.00044 | Asz | 0.00022 |
| Qyb | 0.00055 | Qzb | 0.00055 |
| Iyy | 0.00000 | Izz | 0.00000 |
| Ybar | 0.02500 | Zbar | 0.02500 |
| Wely | 0.00000 | Welz | 0.00000 |
| ry | 0.01665 | rz | 0.01665 |

## 3. Design Parameters

Unbraced Lengths Ly = 1.26500, Lz = 1.26500, Lb = 1.26500
Effective Length Factors Ky = 1.00, Kz = 1.00
Equivalent Uniform Moment Factors Cmy = 1.00, Cmz = 1.00, CmLT = 1.00

## 4. Checking Results

Slenderness Ratio
KL/r = 76.0 < 200.0 (LCB: 2)..... O.K
Axial Resistance
N_Ed/MIN[Nc_Rd, Nb_Rd] = 7.7127/68.4832 = 0.113 < 1.000 ..... O.K
Bending Resistance
M_Edy/M_Rdy = 0.00000/1.23767 = 0.000 < 1.000 ..... O.K
M_Edz/M_Rdz = 0.00000/1.23767 = 0.000 < 1.000 ..... O.K
Combined Resistance
RNRd = MAX[ M_Edy/Mny_Rd, M_Edz/Mnz_Rd ]
Rcom = N_Ed/(A*fy/Gamma_M0), Rbend = M_Edy/My_Rd + M_Edz/Mz_Rd
Rc_LT1 = N_Ed/(Xiy*A*fy/Gamma_M1)
Rb_LT1 = (kyy*M_Edy)/(Xi_LT*Wply*fy/Gamma_M1) + (kyz*Msdz)/(Wplz*fy/Gamma_M1)
Rc_LT2 = N_Ed/(Xiz*A*fy/Gamma_M1)
Rb_LT2 = (Kzy*M_Edy)/(Xi_LT*Wply*fy/Gamma_M1) + (Kzz*Msdz)/(Wplz*fy/Gamma_M1)
Rmax = MAX[ RNRd, (Rcom+Rbend), MAX(Rc_LT1+Rb_LT1, Rc_LT2+Rb_LT2) ] = 0.113 < 1.000 .. O.K
Torsion Strength
T_Ed/T_Rd = 0.00000/1.05796 = 0.000 < 1.000 ..... O.K
Shear Resistance
V_Edy/Vy_Rd = 0.000 < 1.000 ..... O.K
V_Edz/Vz_Rd = 0.000 < 1.000 ..... O.K

# Steel Checking Result

| | | | |
|---|---|---|---|
| Company | | Project Title | |
| Author | dimore01 | File Name | C:\...\US1\atrio\reticolare.mgb |

## 1. Design Information

Design Code : Eurocode3:05
Unit System : kN, m
Member No : 146
Material : S235_LC2 (No:3)
(Fy = 195833, Es = 210000000)
Section Name : tubolare (No:2)
(Built-up Section).
Member Length : 9.95000

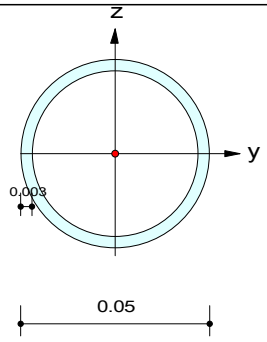


## 2. Member Forces

Axial Force Fxx = -7.2100 (LCB: 2, POS:1/2)
Bending Moments My = 0.00000, Mz = 0.00000
End Moments Myi = 0.00000, Myj = 0.00000 (for Lb)
Myi = 0.00000, Myj = 0.00000 (for Ly)
Mzi = 0.00000, Mzj = 0.00000 (for Lz)
Shear Forces Fyy = 0.00000 (LCB: 1, POS:1/2)
Fzz = 0.00000 (LCB: 1, POS:1/2)

| | | | |
|---|---|---|---|
| Outer Dia. | 0.05000 | Wall Thick | 0.00300 |
| Area | 0.00044 | Asz | 0.00022 |
| Qyb | 0.00055 | Qzb | 0.00055 |
| Iyy | 0.00000 | Izz | 0.00000 |
| Ybar | 0.02500 | Zbar | 0.02500 |
| Wely | 0.00000 | Welz | 0.00000 |
| ry | 0.01665 | rz | 0.01665 |

## 3. Design Parameters

Unbraced Lengths Ly = 1.26500, Lz = 1.26500, Lb = 1.26500
Effective Length Factors Ky = 1.00, Kz = 1.00
Equivalent Uniform Moment Factors Cmy = 1.00, Cmz = 1.00, CmLT = 1.00

## 4. Checking Results

Slenderness Ratio
KL/r = 76.0 < 200.0 (LCB: 2)..... O.K
Axial Resistance
N_Ed/MIN[Nc_Rd, Nb_Rd] = 7.2100/68.4832 = 0.105 < 1.000 ..... O.K
Bending Resistance
M_Edy/M_Rdy = 0.00000/1.23767 = 0.000 < 1.000 ..... O.K
M_Edz/M_Rdz = 0.00000/1.23767 = 0.000 < 1.000 ..... O.K
Combined Resistance
RNRd = MAX[ M_Edy/Mny_Rd, M_Edz/Mnz_Rd ]
Rcom = N_Ed/(A*fy/Gamma_M0), Rbend = M_Edy/My_Rd + M_Edz/Mz_Rd
Rc_LT1 = N_Ed/(Xiy*A*fy/Gamma_M1)
Rb_LT1 = (kyy*M_Edy)/(Xi_LT*Wply*fy/Gamma_M1) + (kyz*Msdz)/(Wplz*fy/Gamma_M1)
Rc_LT2 = N_Ed/(Xiz*A*fy/Gamma_M1)
Rb_LT2 = (Kzy*M_Edy)/(Xi_LT*Wply*fy/Gamma_M1) + (Kzz*Msdz)/(Wplz*fy/Gamma_M1)
Rmax = MAX[ RNRd, (Rcom+Rbend), MAX(Rc_LT1+Rb_LT1, Rc_LT2+Rb_LT2) ] = 0.105 < 1.000 .. O.K
Torsion Strength
T_Ed/T_Rd = 0.00000/1.05796 = 0.000 < 1.000 ..... O.K
Shear Resistance
V_Edy/Vy_Rd = 0.000 < 1.000 ..... O.K
V_Edz/Vz_Rd = 0.000 < 1.000 ..... O.K

# Steel Checking Result

| | | | |
|---|---|---|---|
| Company | | Project Title | |
| Author | dimore01 | File Name | C:\...\US1\atrio\reticolare.mgb |

## 1. Design Information

Design Code : Eurocode3:05
Unit System : kN, m
Member No : 113
Material : S235_LC2 (No:3)
(Fy = 195833, Es = 210000000)
Section Name : tubolare (No:2)
(Built-up Section).
Member Length : 9.95000

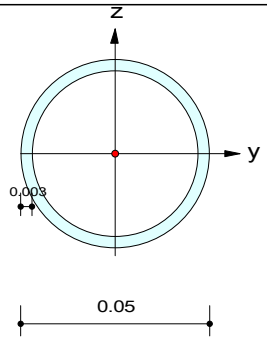


## 2. Member Forces

Axial Force Fxx = -7.3857 (LCB: 2, POS:1/2)
Bending Moments My = 0.00000, Mz = 0.00000
End Moments Myi = 0.00000, Myj = 0.00000 (for Lb)
Myi = 0.00000, Myj = 0.00000 (for Ly)
Mzi = 0.00000, Mzj = 0.00000 (for Lz)
Shear Forces Fyy = 0.00000 (LCB: 1, POS:1/2)
Fzz = 0.00000 (LCB: 1, POS:1/2)

| | | | |
|---|---|---|---|
| Outer Dia. | 0.05000 | Wall Thick | 0.00300 |
| Area | 0.00044 | Asz | 0.00022 |
| Qyb | 0.00055 | Qzb | 0.00055 |
| Iyy | 0.00000 | Izz | 0.00000 |
| Ybar | 0.02500 | Zbar | 0.02500 |
| Wely | 0.00000 | Welz | 0.00000 |
| ry | 0.01665 | rz | 0.01665 |

## 3. Design Parameters

Unbraced Lengths Ly = 1.26500, Lz = 1.26500, Lb = 1.26500
Effective Length Factors Ky = 1.00, Kz = 1.00
Equivalent Uniform Moment Factors Cmy = 1.00, Cmz = 1.00, CmLT = 1.00

## 4. Checking Results

Slenderness Ratio
KL/r = 76.0 < 200.0 (LCB: 2)..... O.K
Axial Resistance
N_Ed/MIN[Nc_Rd, Nb_Rd] = 7.3857/68.4832 = 0.108 < 1.000 ..... O.K
Bending Resistance
M_Edy/M_Rdy = 0.00000/1.23767 = 0.000 < 1.000 ..... O.K
M_Edz/M_Rdz = 0.00000/1.23767 = 0.000 < 1.000 ..... O.K
Combined Resistance
RNRd = MAX[ M_Edy/Mny_Rd, M_Edz/Mnz_Rd ]
Rcom = N_Ed/(A*fy/Gamma_M0), Rbend = M_Edy/My_Rd + M_Edz/Mz_Rd
Rc_LT1 = N_Ed/(Xiy*A*fy/Gamma_M1)
Rb_LT1 = (kyy*M_Edy)/(Xi_LT*Wply*fy/Gamma_M1) + (kyz*Msdz)/(Wplz*fy/Gamma_M1)
Rc_LT2 = N_Ed/(Xiz*A*fy/Gamma_M1)
Rb_LT2 = (Kzy*M_Edy)/(Xi_LT*Wply*fy/Gamma_M1) + (Kzz*Msdz)/(Wplz*fy/Gamma_M1)
Rmax = MAX[ RNRd, (Rcom+Rbend), MAX(Rc_LT1+Rb_LT1, Rc_LT2+Rb_LT2) ] = 0.108 < 1.000 .. O.K
Torsion Strength
T_Ed/T_Rd = 0.00000/1.05796 = 0.000 < 1.000 ..... O.K
Shear Resistance
V_Edy/Vy_Rd = 0.000 < 1.000 ..... O.K
V_Edz/Vz_Rd = 0.000 < 1.000 ..... O.K

# Steel Checking Result

| | | | |
|---|---|---|---|
| Company | | Project Title | |
| Author | dimore01 | File Name | C:\...\US1\atrio\reticolare.mgb |

## 1. Design Information

Design Code : Eurocode3:05
Unit System : kN, m
Member No : 80
Material : S235_LC2 (No:3)
(Fy = 195833, Es = 210000000)
Section Name : tubolare (No:2)
(Built-up Section).
Member Length : 9.95000

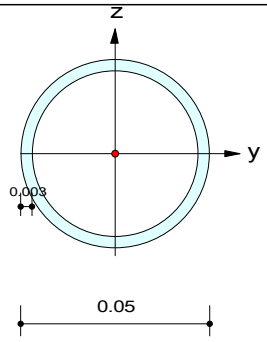


## 2. Member Forces

Axial Force Fxx = -7.2100 (LCB: 2, POS:1/2)
Bending Moments My = 0.00000, Mz = 0.00000
End Moments Myi = 0.00000, Myj = 0.00000 (for Lb)
Myi = 0.00000, Myj = 0.00000 (for Ly)
Mzi = 0.00000, Mzj = 0.00000 (for Lz)
Shear Forces Fyy = 0.00000 (LCB: 1, POS:1/2)
Fzz = 0.00000 (LCB: 1, POS:1/2)

| | | | |
|---|---|---|---|
| Outer Dia. | 0.05000 | Wall Thick | 0.00300 |
| Area | 0.00044 | Asz | 0.00022 |
| Qyb | 0.00055 | Qzb | 0.00055 |
| Iyy | 0.00000 | Izz | 0.00000 |
| Ybar | 0.02500 | Zbar | 0.02500 |
| Wely | 0.00000 | Welz | 0.00000 |
| ry | 0.01665 | rz | 0.01665 |

## 3. Design Parameters

Unbraced Lengths Ly = 1.26500, Lz = 1.26500, Lb = 1.26500
Effective Length Factors Ky = 1.00, Kz = 1.00
Equivalent Uniform Moment Factors Cmy = 1.00, Cmz = 1.00, CmLT = 1.00

## 4. Checking Results

Slenderness Ratio
KL/r = 76.0 < 200.0 (LCB: 2)..... O.K
Axial Resistance
N_Ed/MIN[Nc_Rd, Nb_Rd] = 7.2100/68.4832 = 0.105 < 1.000 ..... O.K
Bending Resistance
M_Edy/M_Rdy = 0.00000/1.23767 = 0.000 < 1.000 ..... O.K
M_Edz/M_Rdz = 0.00000/1.23767 = 0.000 < 1.000 ..... O.K
Combined Resistance
RNRd = MAX[ M_Edy/Mny_Rd, M_Edz/Mnz_Rd ]
Rcom = N_Ed/(A*fy/Gamma_M0), Rbend = M_Edy/My_Rd + M_Edz/Mz_Rd
Rc_LT1 = N_Ed/(Xiy*A*fy/Gamma_M1)
Rb_LT1 = (kyy*M_Edy)/(Xi_LT*Wply*fy/Gamma_M1) + (kyz*Msdz)/(Wplz*fy/Gamma_M1)
Rc_LT2 = N_Ed/(Xiz*A*fy/Gamma_M1)
Rb_LT2 = (Kzy*M_Edy)/(Xi_LT*Wply*fy/Gamma_M1) + (Kzz*Msdz)/(Wplz*fy/Gamma_M1)
Rmax = MAX[ RNRd, (Rcom+Rbend), MAX(Rc_LT1+Rb_LT1, Rc_LT2+Rb_LT2) ] = 0.105 < 1.000 .. O.K
Torsion Strength
T_Ed/T_Rd = 0.00000/1.05796 = 0.000 < 1.000 ..... O.K
Shear Resistance
V_Edy/Vy_Rd = 0.000 < 1.000 ..... O.K
V_Edz/Vz_Rd = 0.000 < 1.000 ..... O.K

# Steel Checking Result

| | | | |
|---|---|---|---|
| Company | | Project Title | |
| Author | dimore01 | File Name | C:\...\US1\atrio\reticolare.mgb |

## 1. Design Information

Design Code : Eurocode3:05
Unit System : kN, m
Member No : 650
Material : S275 (No:1)
(Fy = 275000, Es = 210000000)
Section Name : catene fi10 (No:3)
(Built-up Section).
Member Length : 1.55554

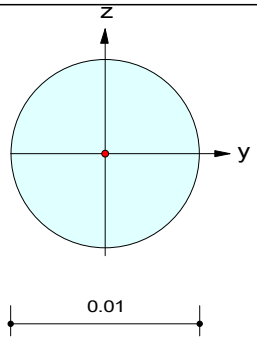


## 2. Member Forces

Axial Force Fxx = 0.00000 (LCB: 1, POS:J)
Bending Moments My = 0.00000, Mz = 0.00000
End Moments Myi = 0.00000, Myj = 0.00000 (for Lb)
Myi = 0.00000, Myj = 0.00000 (for Ly)
Mzi = 0.00000, Mzj = 0.00000 (for Lz)
Shear Forces Fyy = 0.00000 (LCB: 1, POS:J)
Fzz = 0.00000 (LCB: 1, POS:J)

Outer Dia. 0.01000

| | | | |
|---|---|---|---|
| Area | 0.00008 | Asz | 0.00007 |
| Qyb | 0.00001 | Qzb | 0.00001 |
| Iyy | 0.00000 | Izz | 0.00000 |
| Ybar | 0.00500 | Zbar | 0.00500 |
| Wely | 0.00000 | Welz | 0.00000 |
| ry | 0.00250 | rz | 0.00250 |

## 3. Design Parameters

Unbraced Lengths Ly = 1.55554, Lz = 1.55554, Lb = 1.55554
Effective Length Factors Ky = 1.00, Kz = 1.00
Equivalent Uniform Moment Factors Cmy = 1.00, Cmz = 1.00, CmLT = 1.00

## 4. Checking Results

Slenderness Ratio
L/r = 622.2 > 300.0 (LCB: 2)..... N.G
Axial Resistance
N_Ed/Nt_Rd = 0.0000/20.5700 = 0.000 < 1.000 ..... O.K
Bending Resistance
M_Edy/M_Rdy = 0.00000/0.04365 = 0.000 < 1.000 ..... O.K
M_Edz/M_Rdz = 0.00000/0.04365 = 0.000 < 1.000 ..... O.K
Combined Resistance
RNRd = MAX[ M_Edy/Mny_Rd, M_Edz/Mnz_Rd ]
Rcom = N_Ed/(A*fy/Gamma_M0), Rbend = M_Edy/My_Rd + M_Edz/Mz_Rd
Rmax = MAX[ RNRd, (Rcom+Rbend) ] = 0.000 < 1.000 ..... O.K
Shear Resistance
V_Edy/Vy_Rd = 0.000 < 1.000 ..... O.K
V_Edz/Vz_Rd = 0.000 < 1.000 ..... O.K

# Steel Checking Result

| | | | |
|---|---|---|---|
| Company | | Project Title | |
| Author | dimore01 | File Name | C:\...\US1\atrio\reticolare.mgb |

## 1. Design Information

Design Code : Eurocode3:05
Unit System : kN, m
Member No : 649
Material : S275 (No:1)
(Fy = 275000, Es = 210000000)
Section Name : catene fi10 (No:3)
(Built-up Section).
Member Length : 3.41884

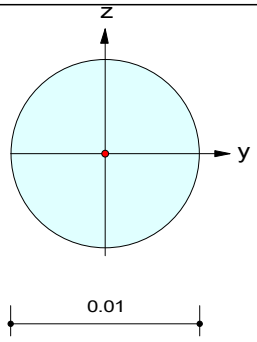


## 2. Member Forces

Axial Force Fxx = 0.00000 (LCB: 1, POS:J)
Bending Moments My = 0.00000, Mz = 0.00000
End Moments Myi = 0.00000, Myj = 0.00000 (for Lb)
Myi = 0.00000, Myj = 0.00000 (for Ly)
Mzi = 0.00000, Mzj = 0.00000 (for Lz)
Shear Forces Fyy = 0.00000 (LCB: 1, POS:J)
Fzz = 0.00000 (LCB: 1, POS:J)

Outer Dia. 0.01000

| | | | |
|---|---|---|---|
| Area | 0.00008 | Asz | 0.00007 |
| Qyb | 0.00001 | Qzb | 0.00001 |
| Iyy | 0.00000 | Izz | 0.00000 |
| Ybar | 0.00500 | Zbar | 0.00500 |
| Wely | 0.00000 | Welz | 0.00000 |
| ry | 0.00250 | rz | 0.00250 |

## 3. Design Parameters

Unbraced Lengths Ly = 3.41884, Lz = 3.41884, Lb = 3.41884
Effective Length Factors Ky = 1.00, Kz = 1.00
Equivalent Uniform Moment Factors Cmy = 1.00, Cmz = 1.00, CmLT = 1.00

## 4. Checking Results

Slenderness Ratio
L/r =1367.5 > 300.0 (LCB: 2)..... N.G
Axial Resistance
N_Ed/Nt_Rd = 0.0000/20.5700 = 0.000 < 1.000 ..... O.K
Bending Resistance
M_Edy/M_Rdy = 0.00000/0.04365 = 0.000 < 1.000 ..... O.K
M_Edz/M_Rdz = 0.00000/0.04365 = 0.000 < 1.000 ..... O.K
Combined Resistance
RNRd = MAX[ M_Edy/Mny_Rd, M_Edz/Mnz_Rd ]
Rcom = N_Ed/(A*fy/Gamma_M0), Rbend = M_Edy/My_Rd + M_Edz/Mz_Rd
Rmax = MAX[ RNRd, (Rcom+Rbend) ] = 0.000 < 1.000 ..... O.K
Shear Resistance
V_Edy/Vy_Rd = 0.000 < 1.000 ..... O.K
V_Edz/Vz_Rd = 0.000 < 1.000 ..... O.K

# Steel Checking Result

| | | | |
|---|---|---|---|
| Company | | Project Title | |
| Author | dimore01 | File Name | C:\...\US1\atrio\reticolare.mgb |

## 1. Design Information

Design Code : Eurocode3:05
Unit System : kN, m
Member No : 648
Material : S275 (No:1)
(Fy = 275000, Es = 210000000)
Section Name : catene fi10 (No:3)
(Built-up Section).
Member Length : 5.29004

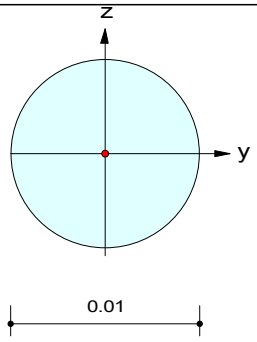


## 2. Member Forces

Axial Force Fxx = 0.00000 (LCB: 1, POS:J)
Bending Moments My = 0.00000, Mz = 0.00000
End Moments Myi = 0.00000, Myj = 0.00000 (for Lb)
Myi = 0.00000, Myj = 0.00000 (for Ly)
Mzi = 0.00000, Mzj = 0.00000 (for Lz)
Shear Forces Fyy = 0.00000 (LCB: 1, POS:J)
Fzz = 0.00000 (LCB: 1, POS:J)

Outer Dia. 0.01000

| | | | |
|---|---|---|---|
| Area | 0.00008 | Asz | 0.00007 |
| Qyb | 0.00001 | Qzb | 0.00001 |
| Iyy | 0.00000 | Izz | 0.00000 |
| Ybar | 0.00500 | Zbar | 0.00500 |
| Wely | 0.00000 | Welz | 0.00000 |
| ry | 0.00250 | rz | 0.00250 |

## 3. Design Parameters

Unbraced Lengths Ly = 5.29004, Lz = 5.29004, Lb = 5.29004
Effective Length Factors Ky = 1.00, Kz = 1.00
Equivalent Uniform Moment Factors Cmy = 1.00, Cmz = 1.00, CmLT = 1.00

## 4. Checking Results

Slenderness Ratio
L/r =2116.0 > 300.0 (LCB: 2)..... N.G
Axial Resistance
N_Ed/Nt_Rd = 0.0000/20.5700 = 0.000 < 1.000 ..... O.K
Bending Resistance
M_Edy/M_Rdy = 0.00000/0.04365 = 0.000 < 1.000 ..... O.K
M_Edz/M_Rdz = 0.00000/0.04365 = 0.000 < 1.000 ..... O.K
Combined Resistance
RNRd = MAX[ M_Edy/Mny_Rd, M_Edz/Mnz_Rd ]
Rcom = N_Ed/(A*fy/Gamma_M0), Rbend = M_Edy/My_Rd + M_Edz/Mz_Rd
Rmax = MAX[ RNRd, (Rcom+Rbend) ] = 0.000 < 1.000 ..... O.K
Shear Resistance
V_Edy/Vy_Rd = 0.000 < 1.000 ..... O.K
V_Edz/Vz_Rd = 0.000 < 1.000 ..... O.K

# Steel Checking Result

| | | | |
|---|---|---|---|
| Company | | Project Title | |
| Author | dimore01 | File Name | C:\...\US1\atrio\reticolare.mgb |

## 1. Design Information

Design Code : Eurocode3:05
Unit System : kN, m
Member No : 647
Material : S275 (No:1)
(Fy = 275000, Es = 210000000)
Section Name : catene fi10 (No:3)
(Built-up Section).
Member Length : 7.16294

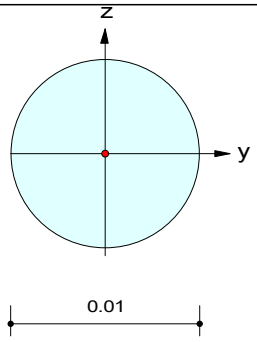


## 2. Member Forces

Axial Force Fxx = 0.00000 (LCB: 1, POS:J)
Bending Moments My = 0.00000, Mz = 0.00000
End Moments Myi = 0.00000, Myj = 0.00000 (for Lb)
Myi = 0.00000, Myj = 0.00000 (for Ly)
Mzi = 0.00000, Mzj = 0.00000 (for Lz)
Shear Forces Fyy = 0.00000 (LCB: 1, POS:J)
Fzz = 0.00000 (LCB: 1, POS:J)

Outer Dia. 0.01000

| | | | |
|---|---|---|---|
| Area | 0.00008 | Asz | 0.00007 |
| Qyb | 0.00001 | Qzb | 0.00001 |
| Iyy | 0.00000 | Izz | 0.00000 |
| Ybar | 0.00500 | Zbar | 0.00500 |
| Wely | 0.00000 | Welz | 0.00000 |
| ry | 0.00250 | rz | 0.00250 |

## 3. Design Parameters

Unbraced Lengths Ly = 7.16294, Lz = 7.16294, Lb = 7.16294
Effective Length Factors Ky = 1.00, Kz = 1.00
Equivalent Uniform Moment Factors Cmy = 1.00, Cmz = 1.00, CmLT = 1.00

## 4. Checking Results

Slenderness Ratio
L/r =2865.2 > 300.0 (LCB: 2)..... N.G
Axial Resistance
N_Ed/Nt_Rd = 0.0000/20.5700 = 0.000 < 1.000 ..... O.K
Bending Resistance
M_Edy/M_Rdy = 0.00000/0.04365 = 0.000 < 1.000 ..... O.K
M_Edz/M_Rdz = 0.00000/0.04365 = 0.000 < 1.000 ..... O.K
Combined Resistance
RNRd = MAX[ M_Edy/Mny_Rd, M_Edz/Mnz_Rd ]
Rcom = N_Ed/(A*fy/Gamma_M0), Rbend = M_Edy/My_Rd + M_Edz/Mz_Rd
Rmax = MAX[ RNRd, (Rcom+Rbend) ] = 0.000 < 1.000 ..... O.K
Shear Resistance
V_Edy/Vy_Rd = 0.000 < 1.000 ..... O.K
V_Edz/Vz_Rd = 0.000 < 1.000 ..... O.K

# Steel Checking Result

| | | | |
|---|---|---|---|
| Company | | Project Title | |
| Author | dimore01 | File Name | C:\...\US1\atrio\reticolare.mgb |

## 1. Design Information

Design Code : Eurocode3:05
Unit System : kN, m
Member No : 646
Material : S275 (No:1)
(Fy = 275000, Es = 210000000)
Section Name : catene fi10 (No:3)
(Built-up Section).
Member Length : 9.03649

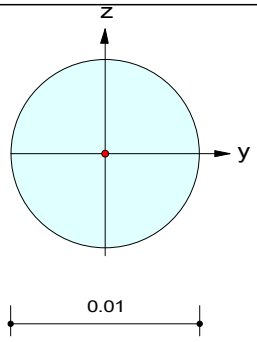


## 2. Member Forces

Axial Force Fxx = 0.00000 (LCB: 1, POS:J)
Bending Moments My = 0.00000, Mz = 0.00000
End Moments Myi = 0.00000, Myj = 0.00000 (for Lb)
Myi = 0.00000, Myj = 0.00000 (for Ly)
Mzi = 0.00000, Mzj = 0.00000 (for Lz)
Shear Forces Fyy = 0.00000 (LCB: 1, POS:J)
Fzz = 0.00000 (LCB: 1, POS:J)

Outer Dia. 0.01000

| | | | |
|---|---|---|---|
| Area | 0.00008 | Asz | 0.00007 |
| Qyb | 0.00001 | Qzb | 0.00001 |
| Iyy | 0.00000 | Izz | 0.00000 |
| Ybar | 0.00500 | Zbar | 0.00500 |
| Wely | 0.00000 | Welz | 0.00000 |
| ry | 0.00250 | rz | 0.00250 |

## 3. Design Parameters

Unbraced Lengths Ly = 9.03649, Lz = 9.03649, Lb = 9.03649
Effective Length Factors Ky = 1.00, Kz = 1.00
Equivalent Uniform Moment Factors Cmy = 1.00, Cmz = 1.00, CmLT = 1.00

## 4. Checking Results

Slenderness Ratio
L/r =3614.6 > 300.0 (LCB: 2)..... N.G
Axial Resistance
N_Ed/Nt_Rd = 0.0000/20.5700 = 0.000 < 1.000 ..... O.K
Bending Resistance
M_Edy/M_Rdy = 0.00000/0.04365 = 0.000 < 1.000 ..... O.K
M_Edz/M_Rdz = 0.00000/0.04365 = 0.000 < 1.000 ..... O.K
Combined Resistance
RNRd = MAX[ M_Edy/Mny_Rd, M_Edz/Mnz_Rd ]
Rcom = N_Ed/(A*fy/Gamma_M0), Rbend = M_Edy/My_Rd + M_Edz/Mz_Rd
Rmax = MAX[ RNRd, (Rcom+Rbend) ] = 0.000 < 1.000 ..... O.K
Shear Resistance
V_Edy/Vy_Rd = 0.000 < 1.000 ..... O.K
V_Edz/Vz_Rd = 0.000 < 1.000 ..... O.K

# Steel Checking Result

| | | | |
|---|---|---|---|
| Company | | Project Title | |
| Author | dimore01 | File Name | C:\...\US1\atrio\reticolare.mgb |

## 1. Design Information

Design Code : Eurocode3:05
Unit System : kN, m
Member No : 645
Material : S275 (No:1)
(Fy = 275000, Es = 210000000)
Section Name : catene fi10 (No:3)
(Built-up Section).
Member Length : 10.9103

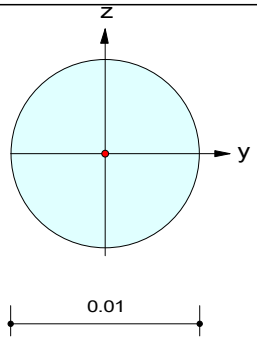


## 2. Member Forces

Axial Force Fxx = 0.00000 (LCB: 1, POS:J)
Bending Moments My = 0.00000, Mz = 0.00000
End Moments Myi = 0.00000, Myj = 0.00000 (for Lb)
Myi = 0.00000, Myj = 0.00000 (for Ly)
Mzi = 0.00000, Mzj = 0.00000 (for Lz)
Shear Forces Fyy = 0.00000 (LCB: 1, POS:J)
Fzz = 0.00000 (LCB: 1, POS:J)

Outer Dia. 0.01000

| | | | |
|---|---|---|---|
| Area | 0.00008 | Asz | 0.00007 |
| Qyb | 0.00001 | Qzb | 0.00001 |
| Iyy | 0.00000 | Izz | 0.00000 |
| Ybar | 0.00500 | Zbar | 0.00500 |
| Wely | 0.00000 | Welz | 0.00000 |
| ry | 0.00250 | rz | 0.00250 |

## 3. Design Parameters

Unbraced Lengths Ly = 10.9103, Lz = 10.9103, Lb = 10.9103
Effective Length Factors Ky = 1.00, Kz = 1.00
Equivalent Uniform Moment Factors Cmy = 1.00, Cmz = 1.00, CmLT = 1.00

## 4. Checking Results

Slenderness Ratio
L/r =4364.1 > 300.0 (LCB: 2)..... N.G
Axial Resistance
N_Ed/Nt_Rd = 0.0000/20.5700 = 0.000 < 1.000 ..... O.K
Bending Resistance
M_Edy/M_Rdy = 0.00000/0.04365 = 0.000 < 1.000 ..... O.K
M_Edz/M_Rdz = 0.00000/0.04365 = 0.000 < 1.000 ..... O.K
Combined Resistance
RNRd = MAX[ M_Edy/Mny_Rd, M_Edz/Mnz_Rd ]
Rcom = N_Ed/(A*fy/Gamma_M0), Rbend = M_Edy/My_Rd + M_Edz/Mz_Rd
Rmax = MAX[ RNRd, (Rcom+Rbend) ] = 0.000 < 1.000 ..... O.K
Shear Resistance
V_Edy/Vy_Rd = 0.000 < 1.000 ..... O.K
V_Edz/Vz_Rd = 0.000 < 1.000 ..... O.K

# Steel Checking Result

| | | | |
|---|---|---|---|
| Company | | Project Title | |
| Author | dimore01 | File Name | C:\...\US1\atrio\reticolare.mgb |

## 1. Design Information

Design Code : Eurocode3:05
Unit System : kN, m
Member No : 644
Material : S275 (No:1)
(Fy = 275000, Es = 210000000)
Section Name : catene fi10 (No:3)
(Built-up Section).
Member Length : 12.7844

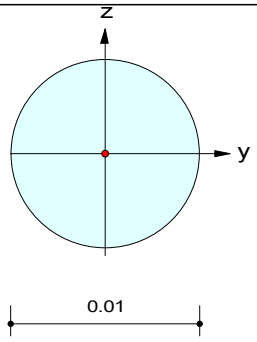


## 2. Member Forces

Axial Force Fxx = 0.00000 (LCB: 1, POS:J)
Bending Moments My = 0.00000, Mz = 0.00000
End Moments Myi = 0.00000, Myj = 0.00000 (for Lb)
Myi = 0.00000, Myj = 0.00000 (for Ly)
Mzi = 0.00000, Mzj = 0.00000 (for Lz)
Shear Forces Fyy = 0.00000 (LCB: 1, POS:J)
Fzz = 0.00000 (LCB: 1, POS:J)

Outer Dia. 0.01000

| | | | |
|---|---|---|---|
| Area | 0.00008 | Asz | 0.00007 |
| Qyb | 0.00001 | Qzb | 0.00001 |
| Iyy | 0.00000 | Izz | 0.00000 |
| Ybar | 0.00500 | Zbar | 0.00500 |
| Wely | 0.00000 | Welz | 0.00000 |
| ry | 0.00250 | rz | 0.00250 |

## 3. Design Parameters

Unbraced Lengths Ly = 12.7844, Lz = 12.7844, Lb = 12.7844
Effective Length Factors Ky = 1.00, Kz = 1.00
Equivalent Uniform Moment Factors Cmy = 1.00, Cmz = 1.00, CmLT = 1.00

## 4. Checking Results

Slenderness Ratio
L/r =5113.8 > 300.0 (LCB: 2)..... N.G
Axial Resistance
N_Ed/Nt_Rd = 0.0000/20.5700 = 0.000 < 1.000 ..... O.K
Bending Resistance
M_Edy/M_Rdy = 0.00000/0.04365 = 0.000 < 1.000 ..... O.K
M_Edz/M_Rdz = 0.00000/0.04365 = 0.000 < 1.000 ..... O.K
Combined Resistance
RNRd = MAX[ M_Edy/Mny_Rd, M_Edz/Mnz_Rd ]
Rcom = N_Ed/(A*fy/Gamma_M0), Rbend = M_Edy/My_Rd + M_Edz/Mz_Rd
Rmax = MAX[ RNRd, (Rcom+Rbend) ] = 0.000 < 1.000 ..... O.K
Shear Resistance
V_Edy/Vy_Rd = 0.000 < 1.000 ..... O.K
V_Edz/Vz_Rd = 0.000 < 1.000 ..... O.K

# Steel Checking Result

| | | | |
|---|---|---|---|
| Company | | Project Title | |
| Author | dimore01 | File Name | C:\...\US1\atrio\reticolare.mgb |

## 1. Design Information

Design Code : Eurocode3:05
Unit System : kN, m
Member No : 643
Material : S275 (No:1)
(Fy = 275000, Es = 210000000)
Section Name : catene fi10 (No:3)
(Built-up Section).
Member Length : 14.6585

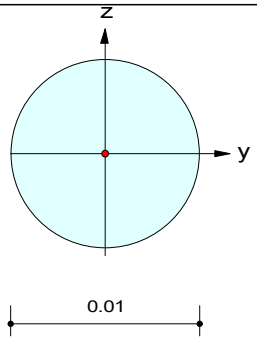


## 2. Member Forces

Axial Force Fxx = 0.00000 (LCB: 1, POS:J)
Bending Moments My = 0.00000, Mz = 0.00000
End Moments Myi = 0.00000, Myj = 0.00000 (for Lb)
Myi = 0.00000, Myj = 0.00000 (for Ly)
Mzi = 0.00000, Mzj = 0.00000 (for Lz)
Shear Forces Fyy = 0.00000 (LCB: 1, POS:J)
Fzz = 0.00000 (LCB: 1, POS:J)

Outer Dia. 0.01000

| | | | |
|---|---|---|---|
| Area | 0.00008 | Asz | 0.00007 |
| Qyb | 0.00001 | Qzb | 0.00001 |
| Iyy | 0.00000 | Izz | 0.00000 |
| Ybar | 0.00500 | Zbar | 0.00500 |
| Wely | 0.00000 | Welz | 0.00000 |
| ry | 0.00250 | rz | 0.00250 |

## 3. Design Parameters

Unbraced Lengths Ly = 14.6585, Lz = 14.6585, Lb = 14.6585
Effective Length Factors Ky = 1.00, Kz = 1.00
Equivalent Uniform Moment Factors Cmy = 1.00, Cmz = 1.00, CmLT = 1.00

## 4. Checking Results

Slenderness Ratio
L/r =5863.4 > 300.0 (LCB: 2)..... N.G
Axial Resistance
N_Ed/Nt_Rd = 0.0000/20.5700 = 0.000 < 1.000 ..... O.K
Bending Resistance
M_Edy/M_Rdy = 0.00000/0.04365 = 0.000 < 1.000 ..... O.K
M_Edz/M_Rdz = 0.00000/0.04365 = 0.000 < 1.000 ..... O.K
Combined Resistance
RNRd = MAX[ M_Edy/Mny_Rd, M_Edz/Mnz_Rd ]
Rcom = N_Ed/(A*fy/Gamma_M0), Rbend = M_Edy/My_Rd + M_Edz/Mz_Rd
Rmax = MAX[ RNRd, (Rcom+Rbend) ] = 0.000 < 1.000 ..... O.K
Shear Resistance
V_Edy/Vy_Rd = 0.000 < 1.000 ..... O.K
V_Edz/Vz_Rd = 0.000 < 1.000 ..... O.K

# Steel Checking Result

| | | | |
|---|---|---|---|
| Company | | Project Title | |
| Author | dimore01 | File Name | C:\...\US1\atrio\reticolare.mgb |

## 1. Design Information

Design Code : Eurocode3:05
Unit System : kN, m
Member No : 642
Material : S275 (No:1)
(Fy = 275000, Es = 210000000)
Section Name : catene fi10 (No:3)
(Built-up Section).
Member Length : 14.6397

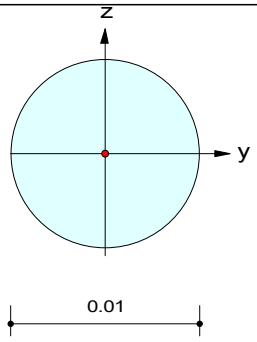


## 2. Member Forces

Axial Force Fxx = 11.8041 (LCB: 2, POS:J)
Bending Moments My = 0.00000, Mz = 0.00000
End Moments Myi = 0.00000, Myj = 0.00000 (for Lb)
Myi = 0.00000, Myj = 0.00000 (for Ly)
Mzi = 0.00000, Mzj = 0.00000 (for Lz)
Shear Forces Fyy = 0.00000 (LCB: 1, POS:J)
Fzz = 0.00000 (LCB: 1, POS:J)

Outer Dia. 0.01000

| | | | |
|---|---|---|---|
| Area | 0.00008 | Asz | 0.00007 |
| Qyb | 0.00001 | Qzb | 0.00001 |
| Iyy | 0.00000 | Izz | 0.00000 |
| Ybar | 0.00500 | Zbar | 0.00500 |
| Wely | 0.00000 | Welz | 0.00000 |
| ry | 0.00250 | rz | 0.00250 |

## 3. Design Parameters

Unbraced Lengths Ly = 14.6397, Lz = 14.6397, Lb = 14.6397
Effective Length Factors Ky = 1.00, Kz = 1.00
Equivalent Uniform Moment Factors Cmy = 1.00, Cmz = 1.00, CmLT = 1.00

## 4. Checking Results

Slenderness Ratio
L/r =5855.9 > 300.0 (LCB: 2)..... N.G
Axial Resistance
N_Ed/Nt_Rd = 11.8041/20.5700 = 0.574 < 1.000 ..... O.K
Bending Resistance
M_Edy/M_Rdy = 0.00000/0.04365 = 0.000 < 1.000 ..... O.K
M_Edz/M_Rdz = 0.00000/0.04365 = 0.000 < 1.000 ..... O.K
Combined Resistance
RNRd = MAX[ M_Edy/Mny_Rd, M_Edz/Mnz_Rd ]
Rcom = N_Ed/(A*fy/Gamma_M0), Rbend = M_Edy/My_Rd + M_Edz/Mz_Rd
Rmax = MAX[ RNRd, (Rcom+Rbend) ] = 0.574 < 1.000 ..... O.K
Shear Resistance
V_Edy/Vy_Rd = 0.000 < 1.000 ..... O.K
V_Edz/Vz_Rd = 0.000 < 1.000 ..... O.K

# Steel Checking Result

| | | | |
|---|---|---|---|
| Company | | Project Title | |
| Author | dimore01 | File Name | C:\...\US1\atrio\reticolare.mgb |

## 1. Design Information

Design Code : Eurocode3:05
Unit System : kN, m
Member No : 641
Material : S275 (No:1)
(Fy = 275000, Es = 210000000)
Section Name : catene fi10 (No:3)
(Built-up Section).
Member Length : 12.7657

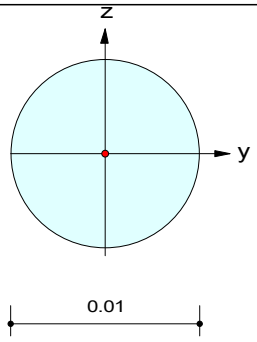


## 2. Member Forces

Axial Force Fxx = 12.3691 (LCB: 2, POS:J)
Bending Moments My = 0.00000, Mz = 0.00000
End Moments Myi = 0.00000, Myj = 0.00000 (for Lb)
Myi = 0.00000, Myj = 0.00000 (for Ly)
Mzi = 0.00000, Mzj = 0.00000 (for Lz)
Shear Forces Fyy = 0.00000 (LCB: 1, POS:J)
Fzz = 0.00000 (LCB: 1, POS:J)

Outer Dia. 0.01000

| | | | |
|---|---|---|---|
| Area | 0.00008 | Asz | 0.00007 |
| Qyb | 0.00001 | Qzb | 0.00001 |
| Iyy | 0.00000 | Izz | 0.00000 |
| Ybar | 0.00500 | Zbar | 0.00500 |
| Wely | 0.00000 | Welz | 0.00000 |
| ry | 0.00250 | rz | 0.00250 |

## 3. Design Parameters

Unbraced Lengths Ly = 12.7657, Lz = 12.7657, Lb = 12.7657
Effective Length Factors Ky = 1.00, Kz = 1.00
Equivalent Uniform Moment Factors Cmy = 1.00, Cmz = 1.00, CmLT = 1.00

## 4. Checking Results

Slenderness Ratio
L/r =5106.3 > 300.0 (LCB: 2)..... N.G
Axial Resistance
N_Ed/Nt_Rd = 12.3691/20.5700 = 0.601 < 1.000 ..... O.K
Bending Resistance
M_Edy/M_Rdy = 0.00000/0.04365 = 0.000 < 1.000 ..... O.K
M_Edz/M_Rdz = 0.00000/0.04365 = 0.000 < 1.000 ..... O.K
Combined Resistance
RNRd = MAX[ M_Edy/Mny_Rd, M_Edz/Mnz_Rd ]
Rcom = N_Ed/(A*fy/Gamma_M0), Rbend = M_Edy/My_Rd + M_Edz/Mz_Rd
Rmax = MAX[ RNRd, (Rcom+Rbend) ] = 0.601 < 1.000 ..... O.K
Shear Resistance
V_Edy/Vy_Rd = 0.000 < 1.000 ..... O.K
V_Edz/Vz_Rd = 0.000 < 1.000 ..... O.K

# Steel Checking Result

| | | | |
|---|---|---|---|
| Company | | Project Title | |
| Author | dimore01 | File Name | C:\...\US1\atrio\reticolare.mgb |

## 1. Design Information

Design Code : Eurocode3:05
Unit System : kN, m
Member No : 640
Material : S275 (No:1)
(Fy = 275000, Es = 210000000)
Section Name : catene fi10 (No:3)
(Built-up Section).
Member Length : 10.8917

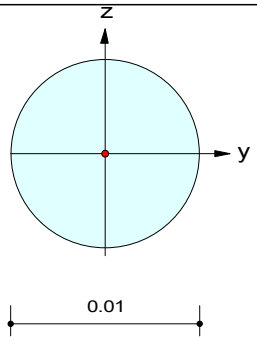


## 2. Member Forces

Axial Force Fxx = 13.0138 (LCB: 2, POS:J)
Bending Moments My = 0.00000, Mz = 0.00000
End Moments Myi = 0.00000, Myj = 0.00000 (for Lb)
Myi = 0.00000, Myj = 0.00000 (for Ly)
Mzi = 0.00000, Mzj = 0.00000 (for Lz)
Shear Forces Fyy = 0.00000 (LCB: 1, POS:J)
Fzz = 0.00000 (LCB: 1, POS:J)

Outer Dia. 0.01000

| | | | |
|---|---|---|---|
| Area | 0.00008 | Asz | 0.00007 |
| Qyb | 0.00001 | Qzb | 0.00001 |
| Iyy | 0.00000 | Izz | 0.00000 |
| Ybar | 0.00500 | Zbar | 0.00500 |
| Wely | 0.00000 | Welz | 0.00000 |
| ry | 0.00250 | rz | 0.00250 |

## 3. Design Parameters

Unbraced Lengths Ly = 10.8917, Lz = 10.8917, Lb = 10.8917
Effective Length Factors Ky = 1.00, Kz = 1.00
Equivalent Uniform Moment Factors Cmy = 1.00, Cmz = 1.00, CmLT = 1.00

## 4. Checking Results

Slenderness Ratio
L/r =4356.7 > 300.0 (LCB: 2)..... N.G
Axial Resistance
N_Ed/Nt_Rd = 13.0138/20.5700 = 0.633 < 1.000 ..... O.K
Bending Resistance
M_Edy/M_Rdy = 0.00000/0.04365 = 0.000 < 1.000 ..... O.K
M_Edz/M_Rdz = 0.00000/0.04365 = 0.000 < 1.000 ..... O.K
Combined Resistance
RNRd = MAX[ M_Edy/Mny_Rd, M_Edz/Mnz_Rd ]
Rcom = N_Ed/(A*fy/Gamma_M0), Rbend = M_Edy/My_Rd + M_Edz/Mz_Rd
Rmax = MAX[ RNRd, (Rcom+Rbend) ] = 0.633 < 1.000 ..... O.K
Shear Resistance
V_Edy/Vy_Rd = 0.000 < 1.000 ..... O.K
V_Edz/Vz_Rd = 0.000 < 1.000 ..... O.K

# Steel Checking Result

| | | | |
|---|---|---|---|
| Company | | Project Title | |
| Author | dimore01 | File Name | C:\...\US1\atrio\reticolare.mgb |

## 1. Design Information

Design Code : Eurocode3:05
Unit System : kN, m
Member No : 639
Material : S275 (No:1)
(Fy = 275000, Es = 210000000)
Section Name : catene fi10 (No:3)
(Built-up Section).
Member Length : 9.01796

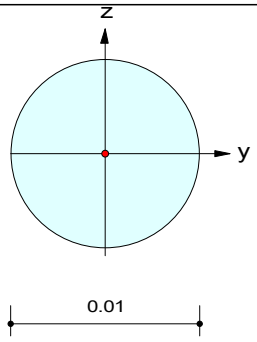


## 2. Member Forces

Axial Force Fxx = 13.6155 (LCB: 2, POS:J)
Bending Moments My = 0.00000, Mz = 0.00000
End Moments Myi = 0.00000, Myj = 0.00000 (for Lb)
Myi = 0.00000, Myj = 0.00000 (for Ly)
Mzi = 0.00000, Mzj = 0.00000 (for Lz)
Shear Forces Fyy = 0.00000 (LCB: 1, POS:J)
Fzz = 0.00000 (LCB: 1, POS:J)

Outer Dia. 0.01000

| | | | |
|---|---|---|---|
| Area | 0.00008 | Asz | 0.00007 |
| Qyb | 0.00001 | Qzb | 0.00001 |
| Iyy | 0.00000 | Izz | 0.00000 |
| Ybar | 0.00500 | Zbar | 0.00500 |
| Wely | 0.00000 | Welz | 0.00000 |
| ry | 0.00250 | rz | 0.00250 |

## 3. Design Parameters

Unbraced Lengths Ly = 9.01796, Lz = 9.01796, Lb = 9.01796
Effective Length Factors Ky = 1.00, Kz = 1.00
Equivalent Uniform Moment Factors Cmy = 1.00, Cmz = 1.00, CmLT = 1.00

## 4. Checking Results

Slenderness Ratio
L/r =3607.2 > 300.0 (LCB: 2)..... N.G
Axial Resistance
N_Ed/Nt_Rd = 13.6155/20.5700 = 0.662 < 1.000 ..... O.K
Bending Resistance
M_Edy/M_Rdy = 0.00000/0.04365 = 0.000 < 1.000 ..... O.K
M_Edz/M_Rdz = 0.00000/0.04365 = 0.000 < 1.000 ..... O.K
Combined Resistance
RNRd = MAX[ M_Edy/Mny_Rd, M_Edz/Mnz_Rd ]
Rcom = N_Ed/(A*fy/Gamma_M0), Rbend = M_Edy/My_Rd + M_Edz/Mz_Rd
Rmax = MAX[ RNRd, (Rcom+Rbend) ] = 0.662 < 1.000 ..... O.K
Shear Resistance
V_Edy/Vy_Rd = 0.000 < 1.000 ..... O.K
V_Edz/Vz_Rd = 0.000 < 1.000 ..... O.K

# Steel Checking Result

| | | | |
|---|---|---|---|
| Company | | Project Title | |
| Author | dimore01 | File Name | C:\...\US1\atrio\reticolare.mgb |

## 1. Design Information

Design Code : Eurocode3:05
Unit System : kN, m
Member No : 638
Material : S275 (No:1)
(Fy = 275000, Es = 210000000)
Section Name : catene fi10 (No:3)
(Built-up Section).
Member Length : 7.14459

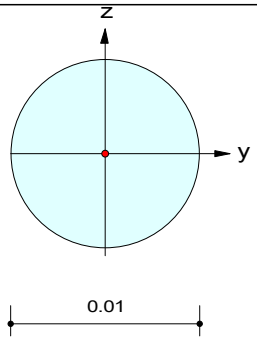


## 2. Member Forces

Axial Force Fxx = 14.2337 (LCB: 2, POS:J)
Bending Moments My = 0.00000, Mz = 0.00000
End Moments Myi = 0.00000, Myj = 0.00000 (for Lb)
Myi = 0.00000, Myj = 0.00000 (for Ly)
Mzi = 0.00000, Mzj = 0.00000 (for Lz)
Shear Forces Fyy = 0.00000 (LCB: 1, POS:J)
Fzz = 0.00000 (LCB: 1, POS:J)

Outer Dia. 0.01000

| | | | |
|---|---|---|---|
| Area | 0.00008 | Asz | 0.00007 |
| Qyb | 0.00001 | Qzb | 0.00001 |
| Iyy | 0.00000 | Izz | 0.00000 |
| Ybar | 0.00500 | Zbar | 0.00500 |
| Wely | 0.00000 | Welz | 0.00000 |
| ry | 0.00250 | rz | 0.00250 |

## 3. Design Parameters

Unbraced Lengths Ly = 7.14459, Lz = 7.14459, Lb = 7.14459
Effective Length Factors Ky = 1.00, Kz = 1.00
Equivalent Uniform Moment Factors Cmy = 1.00, Cmz = 1.00, CmLT = 1.00

## 4. Checking Results

Slenderness Ratio
L/r =2857.8 > 300.0 (LCB: 2)..... N.G
Axial Resistance
N_Ed/Nt_Rd = 14.2337/20.5700 = 0.692 < 1.000 ..... O.K
Bending Resistance
M_Edy/M_Rdy = 0.00000/0.04365 = 0.000 < 1.000 ..... O.K
M_Edz/M_Rdz = 0.00000/0.04365 = 0.000 < 1.000 ..... O.K
Combined Resistance
RNRd = MAX[ M_Edy/Mny_Rd, M_Edz/Mnz_Rd ]
Rcom = N_Ed/(A*fy/Gamma_M0), Rbend = M_Edy/My_Rd + M_Edz/Mz_Rd
Rmax = MAX[ RNRd, (Rcom+Rbend) ] = 0.692 < 1.000 ..... O.K
Shear Resistance
V_Edy/Vy_Rd = 0.000 < 1.000 ..... O.K
V_Edz/Vz_Rd = 0.000 < 1.000 ..... O.K

# Steel Checking Result

| | | | |
|---|---|---|---|
| Company | | Project Title | |
| Author | dimore01 | File Name | C:\...\US1\atrio\reticolare.mgb |

## 1. Design Information

Design Code : Eurocode3:05
Unit System : kN, m
Member No : 637
Material : S275 (No:1)
(Fy = 275000, Es = 210000000)
Section Name : catene fi10 (No:3)
(Built-up Section).
Member Length : 5.27200

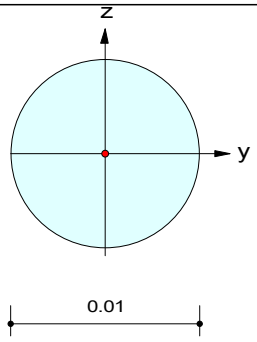


## 2. Member Forces

Axial Force Fxx = 14.8922 (LCB: 2, POS:J)
Bending Moments My = 0.00000, Mz = 0.00000
End Moments Myi = 0.00000, Myj = 0.00000 (for Lb)
Myi = 0.00000, Myj = 0.00000 (for Ly)
Mzi = 0.00000, Mzj = 0.00000 (for Lz)
Shear Forces Fyy = 0.00000 (LCB: 1, POS:J)
Fzz = 0.00000 (LCB: 1, POS:J)

Outer Dia. 0.01000

| | | | |
|---|---|---|---|
| Area | 0.00008 | Asz | 0.00007 |
| Qyb | 0.00001 | Qzb | 0.00001 |
| Iyy | 0.00000 | Izz | 0.00000 |
| Ybar | 0.00500 | Zbar | 0.00500 |
| Wely | 0.00000 | Welz | 0.00000 |
| ry | 0.00250 | rz | 0.00250 |

## 3. Design Parameters

Unbraced Lengths Ly = 5.27200, Lz = 5.27200, Lb = 5.27200
Effective Length Factors Ky = 1.00, Kz = 1.00
Equivalent Uniform Moment Factors Cmy = 1.00, Cmz = 1.00, CmLT = 1.00

## 4. Checking Results

Slenderness Ratio
L/r =2108.8 > 300.0 (LCB: 2)..... N.G
Axial Resistance
N_Ed/Nt_Rd = 14.8922/20.5700 = 0.724 < 1.000 ..... O.K
Bending Resistance
M_Edy/M_Rdy = 0.00000/0.04365 = 0.000 < 1.000 ..... O.K
M_Edz/M_Rdz = 0.00000/0.04365 = 0.000 < 1.000 ..... O.K
Combined Resistance
RNRd = MAX[ M_Edy/Mny_Rd, M_Edz/Mnz_Rd ]
Rcom = N_Ed/(A*fy/Gamma_M0), Rbend = M_Edy/My_Rd + M_Edz/Mz_Rd
Rmax = MAX[ RNRd, (Rcom+Rbend) ] = 0.724 < 1.000 ..... O.K
Shear Resistance
V_Edy/Vy_Rd = 0.000 < 1.000 ..... O.K
V_Edz/Vz_Rd = 0.000 < 1.000 ..... O.K

# Steel Checking Result

| | | | |
|---|---|---|---|
| Company | | Project Title | |
| Author | dimore01 | File Name | C:\...\US1\atrio\reticolare.mgb |

## 1. Design Information

Design Code : Eurocode3:05
Unit System : kN, m
Member No : 636
Material : S275 (No:1)
(Fy = 275000, Es = 210000000)
Section Name : catene fi10 (No:3)
(Built-up Section).
Member Length : 3.40147

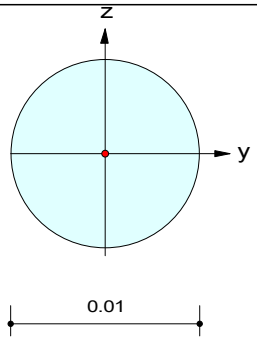


## 2. Member Forces

Axial Force Fxx = 15.4986 (LCB: 2, POS:J)
Bending Moments My = 0.00000, Mz = 0.00000
End Moments Myi = 0.00000, Myj = 0.00000 (for Lb)
Myi = 0.00000, Myj = 0.00000 (for Ly)
Mzi = 0.00000, Mzj = 0.00000 (for Lz)
Shear Forces Fyy = 0.00000 (LCB: 1, POS:J)
Fzz = 0.00000 (LCB: 1, POS:J)

Outer Dia. 0.01000

| | | | |
|---|---|---|---|
| Area | 0.00008 | Asz | 0.00007 |
| Qyb | 0.00001 | Qzb | 0.00001 |
| Iyy | 0.00000 | Izz | 0.00000 |
| Ybar | 0.00500 | Zbar | 0.00500 |
| Wely | 0.00000 | Welz | 0.00000 |
| ry | 0.00250 | rz | 0.00250 |

## 3. Design Parameters

Unbraced Lengths Ly = 3.40147, Lz = 3.40147, Lb = 3.40147
Effective Length Factors Ky = 1.00, Kz = 1.00
Equivalent Uniform Moment Factors Cmy = 1.00, Cmz = 1.00, CmLT = 1.00

## 4. Checking Results

Slenderness Ratio
L/r =1360.6 > 300.0 (LCB: 2)..... N.G
Axial Resistance
N_Ed/Nt_Rd = 15.4986/20.5700 = 0.753 < 1.000 ..... O.K
Bending Resistance
M_Edy/M_Rdy = 0.00000/0.04365 = 0.000 < 1.000 ..... O.K
M_Edz/M_Rdz = 0.00000/0.04365 = 0.000 < 1.000 ..... O.K
Combined Resistance
RNRd = MAX[ M_Edy/Mny_Rd, M_Edz/Mnz_Rd ]
Rcom = N_Ed/(A*fy/Gamma_M0), Rbend = M_Edy/My_Rd + M_Edz/Mz_Rd
Rmax = MAX[ RNRd, (Rcom+Rbend) ] = 0.753 < 1.000 ..... O.K
Shear Resistance
V_Edy/Vy_Rd = 0.000 < 1.000 ..... O.K
V_Edz/Vz_Rd = 0.000 < 1.000 ..... O.K

# Steel Checking Result

| | | | |
|---|---|---|---|
| Company | | Project Title | |
| Author | dimore01 | File Name | C:\...\US1\atrio\reticolare.mgb |

## 1. Design Information

Design Code : Eurocode3:05
Unit System : kN, m
Member No : 635
Material : S275 (No:1)
(Fy = 275000, Es = 210000000)
Section Name : catene fi10 (No:3)
(Built-up Section).
Member Length : 1.54052

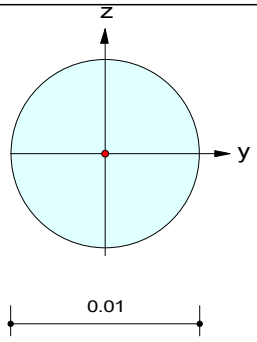


## 2. Member Forces

Axial Force Fxx = 17.2885 (LCB: 2, POS:J)
Bending Moments My = 0.00000, Mz = 0.00000
End Moments Myi = 0.00000, Myj = 0.00000 (for Lb)
Myi = 0.00000, Myj = 0.00000 (for Ly)
Mzi = 0.00000, Mzj = 0.00000 (for Lz)
Shear Forces Fyy = 0.00000 (LCB: 1, POS:J)
Fzz = 0.00000 (LCB: 1, POS:J)

Outer Dia. 0.01000

| | | | |
|---|---|---|---|
| Area | 0.00008 | Asz | 0.00007 |
| Qyb | 0.00001 | Qzb | 0.00001 |
| Iyy | 0.00000 | Izz | 0.00000 |
| Ybar | 0.00500 | Zbar | 0.00500 |
| Wely | 0.00000 | Welz | 0.00000 |
| ry | 0.00250 | rz | 0.00250 |

## 3. Design Parameters

Unbraced Lengths Ly = 1.54052, Lz = 1.54052, Lb = 1.54052
Effective Length Factors Ky = 1.00, Kz = 1.00
Equivalent Uniform Moment Factors Cmy = 1.00, Cmz = 1.00, CmLT = 1.00

## 4. Checking Results

Slenderness Ratio
L/r = 616.2 > 300.0 (LCB: 2)..... N.G
Axial Resistance
N_Ed/Nt_Rd = 17.2885/20.5700 = 0.840 < 1.000 ..... O.K
Bending Resistance
M_Edy/M_Rdy = 0.00000/0.04365 = 0.000 < 1.000 ..... O.K
M_Edz/M_Rdz = 0.00000/0.04365 = 0.000 < 1.000 ..... O.K
Combined Resistance
RNRd = MAX[ M_Edy/Mny_Rd, M_Edz/Mnz_Rd ]
Rcom = N_Ed/(A*fy/Gamma_M0), Rbend = M_Edy/My_Rd + M_Edz/Mz_Rd
Rmax = MAX[ RNRd, (Rcom+Rbend) ] = 0.840 < 1.000 ..... O.K
Shear Resistance
V_Edy/Vy_Rd = 0.000 < 1.000 ..... O.K
V_Edz/Vz_Rd = 0.000 < 1.000 ..... O.K

# Steel Checking Result

| | | | |
|---|---|---|---|
| Company | | Project Title | |
| Author | dimore01 | File Name | C:\...\US1\atrio\reticolare.mgb |

## 1. Design Information

Design Code : Eurocode3:05
Unit System : kN, m
Member No : 634
Material : S275 (No:1)
(Fy = 275000, Es = 210000000)
Section Name : catene fi10 (No:3)
(Built-up Section).
Member Length : 1.54052

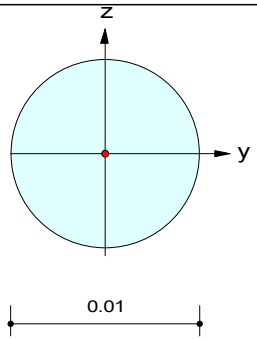


## 2. Member Forces

Axial Force Fxx = 14.6147 (LCB: 2, POS:J)
Bending Moments My = 0.00000, Mz = 0.00000
End Moments Myi = 0.00000, Myj = 0.00000 (for Lb)
Myi = 0.00000, Myj = 0.00000 (for Ly)
Mzi = 0.00000, Mzj = 0.00000 (for Lz)
Shear Forces Fyy = 0.00000 (LCB: 1, POS:J)
Fzz = 0.00000 (LCB: 1, POS:J)

Outer Dia. 0.01000

| | | | |
|---|---|---|---|
| Area | 0.00008 | Asz | 0.00007 |
| Qyb | 0.00001 | Qzb | 0.00001 |
| Iyy | 0.00000 | Izz | 0.00000 |
| Ybar | 0.00500 | Zbar | 0.00500 |
| Wely | 0.00000 | Welz | 0.00000 |
| ry | 0.00250 | rz | 0.00250 |

## 3. Design Parameters

Unbraced Lengths Ly = 1.54052, Lz = 1.54052, Lb = 1.54052
Effective Length Factors Ky = 1.00, Kz = 1.00
Equivalent Uniform Moment Factors Cmy = 1.00, Cmz = 1.00, CmLT = 1.00

## 4. Checking Results

Slenderness Ratio
L/r = 616.2 > 300.0 (LCB: 2)..... N.G
Axial Resistance
N_Ed/Nt_Rd = 14.6147/20.5700 = 0.710 < 1.000 ..... O.K
Bending Resistance
M_Edy/M_Rdy = 0.00000/0.04365 = 0.000 < 1.000 ..... O.K
M_Edz/M_Rdz = 0.00000/0.04365 = 0.000 < 1.000 ..... O.K
Combined Resistance
RNRd = MAX[ M_Edy/Mny_Rd, M_Edz/Mnz_Rd ]
Rcom = N_Ed/(A*fy/Gamma_M0), Rbend = M_Edy/My_Rd + M_Edz/Mz_Rd
Rmax = MAX[ RNRd, (Rcom+Rbend) ] = 0.710 < 1.000 ..... O.K
Shear Resistance
V_Edy/Vy_Rd = 0.000 < 1.000 ..... O.K
V_Edz/Vz_Rd = 0.000 < 1.000 ..... O.K

# Steel Checking Result

| | | | |
|---|---|---|---|
| Company | | Project Title | |
| Author | dimore01 | File Name | C:\...\US1\atrio\reticolare.mgb |

## 1. Design Information

Design Code : Eurocode3:05
Unit System : kN, m
Member No : 633
Material : S275 (No:1)
(Fy = 275000, Es = 210000000)
Section Name : catene fi10 (No:3)
(Built-up Section).
Member Length : 3.40147

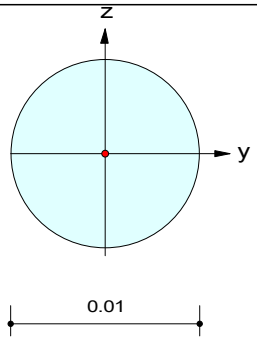


## 2. Member Forces

Axial Force Fxx = 12.5126 (LCB: 2, POS:J)
Bending Moments My = 0.00000, Mz = 0.00000
End Moments Myi = 0.00000, Myj = 0.00000 (for Lb)
Myi = 0.00000, Myj = 0.00000 (for Ly)
Mzi = 0.00000, Mzj = 0.00000 (for Lz)
Shear Forces Fyy = 0.00000 (LCB: 1, POS:J)
Fzz = 0.00000 (LCB: 1, POS:J)

Outer Dia. 0.01000

| | | | |
|---|---|---|---|
| Area | 0.00008 | Asz | 0.00007 |
| Qyb | 0.00001 | Qzb | 0.00001 |
| Iyy | 0.00000 | Izz | 0.00000 |
| Ybar | 0.00500 | Zbar | 0.00500 |
| Wely | 0.00000 | Welz | 0.00000 |
| ry | 0.00250 | rz | 0.00250 |

## 3. Design Parameters

Unbraced Lengths Ly = 3.40147, Lz = 3.40147, Lb = 3.40147
Effective Length Factors Ky = 1.00, Kz = 1.00
Equivalent Uniform Moment Factors Cmy = 1.00, Cmz = 1.00, CmLT = 1.00

## 4. Checking Results

Slenderness Ratio
L/r =1360.6 > 300.0 (LCB: 2)..... N.G
Axial Resistance
N_Ed/Nt_Rd = 12.5126/20.5700 = 0.608 < 1.000 ..... O.K
Bending Resistance
M_Edy/M_Rdy = 0.00000/0.04365 = 0.000 < 1.000 ..... O.K
M_Edz/M_Rdz = 0.00000/0.04365 = 0.000 < 1.000 ..... O.K
Combined Resistance
RNRd = MAX[ M_Edy/Mny_Rd, M_Edz/Mnz_Rd ]
Rcom = N_Ed/(A*fy/Gamma_M0), Rbend = M_Edy/My_Rd + M_Edz/Mz_Rd
Rmax = MAX[ RNRd, (Rcom+Rbend) ] = 0.608 < 1.000 ..... O.K
Shear Resistance
V_Edy/Vy_Rd = 0.000 < 1.000 ..... O.K
V_Edz/Vz_Rd = 0.000 < 1.000 ..... O.K

# Steel Checking Result

| | | | |
|---|---|---|---|
| Company | | Project Title | |
| Author | dimore01 | File Name | C:\...\US1\atrio\reticolare.mgb |

## 1. Design Information

Design Code : Eurocode3:05
Unit System : kN, m
Member No : 632
Material : S275 (No:1)
(Fy = 275000, Es = 210000000)
Section Name : catene fi10 (No:3)
(Built-up Section).
Member Length : 5.27200

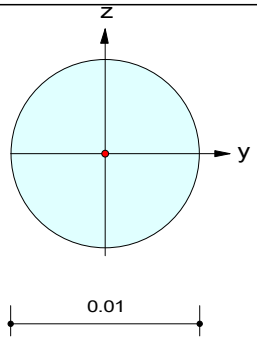


## 2. Member Forces

Axial Force Fxx = 12.0288 (LCB: 2, POS:J)
Bending Moments My = 0.00000, Mz = 0.00000
End Moments Myi = 0.00000, Myj = 0.00000 (for Lb)
Myi = 0.00000, Myj = 0.00000 (for Ly)
Mzi = 0.00000, Mzj = 0.00000 (for Lz)
Shear Forces Fyy = 0.00000 (LCB: 1, POS:J)
Fzz = 0.00000 (LCB: 1, POS:J)

Outer Dia. 0.01000

| | | | |
|---|---|---|---|
| Area | 0.00008 | Asz | 0.00007 |
| Qyb | 0.00001 | Qzb | 0.00001 |
| Iyy | 0.00000 | Izz | 0.00000 |
| Ybar | 0.00500 | Zbar | 0.00500 |
| Wely | 0.00000 | Welz | 0.00000 |
| ry | 0.00250 | rz | 0.00250 |

## 3. Design Parameters

Unbraced Lengths Ly = 5.27200, Lz = 5.27200, Lb = 5.27200
Effective Length Factors Ky = 1.00, Kz = 1.00
Equivalent Uniform Moment Factors Cmy = 1.00, Cmz = 1.00, CmLT = 1.00

## 4. Checking Results

Slenderness Ratio
L/r =2108.8 > 300.0 (LCB: 2)..... N.G
Axial Resistance
N_Ed/Nt_Rd = 12.0288/20.5700 = 0.585 < 1.000 ..... O.K
Bending Resistance
M_Edy/M_Rdy = 0.00000/0.04365 = 0.000 < 1.000 ..... O.K
M_Edz/M_Rdz = 0.00000/0.04365 = 0.000 < 1.000 ..... O.K
Combined Resistance
RNRd = MAX[ M_Edy/Mny_Rd, M_Edz/Mnz_Rd ]
Rcom = N_Ed/(A*fy/Gamma_M0), Rbend = M_Edy/My_Rd + M_Edz/Mz_Rd
Rmax = MAX[ RNRd, (Rcom+Rbend) ] = 0.585 < 1.000 ..... O.K
Shear Resistance
V_Edy/Vy_Rd = 0.000 < 1.000 ..... O.K
V_Edz/Vz_Rd = 0.000 < 1.000 ..... O.K

# Steel Checking Result

| | | | |
|---|---|---|---|
| Company | | Project Title | |
| Author | dimore01 | File Name | C:\...\US1\atrio\reticolare.mgb |

## 1. Design Information

Design Code : Eurocode3:05
Unit System : kN, m
Member No : 631
Material : S275 (No:1)
(Fy = 275000, Es = 210000000)
Section Name : catene fi10 (No:3)
(Built-up Section).
Member Length : 7.14459

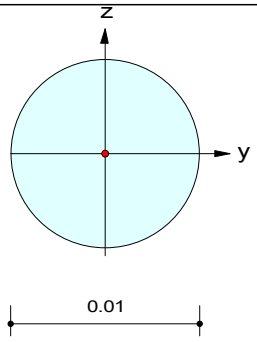


## 2. Member Forces

Axial Force Fxx = 11.8148 (LCB: 2, POS:J)
Bending Moments My = 0.00000, Mz = 0.00000
End Moments Myi = 0.00000, Myj = 0.00000 (for Lb)
Myi = 0.00000, Myj = 0.00000 (for Ly)
Mzi = 0.00000, Mzj = 0.00000 (for Lz)
Shear Forces Fyy = 0.00000 (LCB: 1, POS:J)
Fzz = 0.00000 (LCB: 1, POS:J)

Outer Dia. 0.01000

| | | | |
|---|---|---|---|
| Area | 0.00008 | Asz | 0.00007 |
| Qyb | 0.00001 | Qzb | 0.00001 |
| Iyy | 0.00000 | Izz | 0.00000 |
| Ybar | 0.00500 | Zbar | 0.00500 |
| Wely | 0.00000 | Welz | 0.00000 |
| ry | 0.00250 | rz | 0.00250 |

## 3. Design Parameters

Unbraced Lengths Ly = 7.14459, Lz = 7.14459, Lb = 7.14459
Effective Length Factors Ky = 1.00, Kz = 1.00
Equivalent Uniform Moment Factors Cmy = 1.00, Cmz = 1.00, CmLT = 1.00

## 4. Checking Results

Slenderness Ratio
L/r =2857.8 > 300.0 (LCB: 2)..... N.G
Axial Resistance
N_Ed/Nt_Rd = 11.8148/20.5700 = 0.574 < 1.000 ..... O.K
Bending Resistance
M_Edy/M_Rdy = 0.00000/0.04365 = 0.000 < 1.000 ..... O.K
M_Edz/M_Rdz = 0.00000/0.04365 = 0.000 < 1.000 ..... O.K
Combined Resistance
RNRd = MAX[ M_Edy/Mny_Rd, M_Edz/Mnz_Rd ]
Rcom = N_Ed/(A*fy/Gamma_M0), Rbend = M_Edy/My_Rd + M_Edz/Mz_Rd
Rmax = MAX[ RNRd, (Rcom+Rbend) ] = 0.574 < 1.000 ..... O.K
Shear Resistance
V_Edy/Vy_Rd = 0.000 < 1.000 ..... O.K
V_Edz/Vz_Rd = 0.000 < 1.000 ..... O.K

# Steel Checking Result

| | | | |
|---|---|---|---|
| Company | | Project Title | |
| Author | dimore01 | File Name | C:\...\US1\atrio\reticolare.mgb |

## 1. Design Information

Design Code : Eurocode3:05
Unit System : kN, m
Member No : 630
Material : S275 (No:1)
(Fy = 275000, Es = 210000000)
Section Name : catene fi10 (No:3)
(Built-up Section).
Member Length : 9.01796

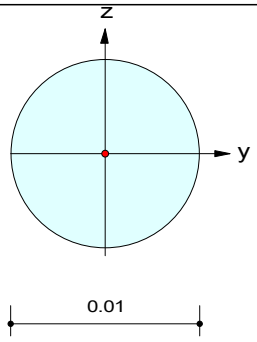


## 2. Member Forces

Axial Force Fxx = 11.6942 (LCB: 2, POS:J)
Bending Moments My = 0.00000, Mz = 0.00000
End Moments Myi = 0.00000, Myj = 0.00000 (for Lb)
Myi = 0.00000, Myj = 0.00000 (for Ly)
Mzi = 0.00000, Mzj = 0.00000 (for Lz)
Shear Forces Fyy = 0.00000 (LCB: 1, POS:J)
Fzz = 0.00000 (LCB: 1, POS:J)

| Outer Dia. 0.01000 | | | |
|---|---|---|---|
| Area | 0.00008 | Asz | 0.00007 |
| Qyb | 0.00001 | Qzb | 0.00001 |
| Iyy | 0.00000 | Izz | 0.00000 |
| Ybar | 0.00500 | Zbar | 0.00500 |
| Wely | 0.00000 | Welz | 0.00000 |
| ry | 0.00250 | rz | 0.00250 |

## 3. Design Parameters

Unbraced Lengths Ly = 9.01796, Lz = 9.01796, Lb = 9.01796
Effective Length Factors Ky = 1.00, Kz = 1.00
Equivalent Uniform Moment Factors Cmy = 1.00, Cmz = 1.00, CmLT = 1.00

## 4. Checking Results

Slenderness Ratio
L/r =3607.2 > 300.0 (LCB: 2)..... N.G
Axial Resistance
N_Ed/Nt_Rd = 11.6942/20.5700 = 0.569 < 1.000 ..... O.K
Bending Resistance
M_Edy/M_Rdy = 0.00000/0.04365 = 0.000 < 1.000 ..... O.K
M_Edz/M_Rdz = 0.00000/0.04365 = 0.000 < 1.000 ..... O.K
Combined Resistance
RNRd = MAX[ M_Edy/Mny_Rd, M_Edz/Mnz_Rd ]
Rcom = N_Ed/(A*fy/Gamma_M0), Rbend = M_Edy/My_Rd + M_Edz/Mz_Rd
Rmax = MAX[ RNRd, (Rcom+Rbend) ] = 0.569 < 1.000 ..... O.K
Shear Resistance
V_Edy/Vy_Rd = 0.000 < 1.000 ..... O.K
V_Edz/Vz_Rd = 0.000 < 1.000 ..... O.K

# Steel Checking Result

| | | | |
|---|---|---|---|
| Company | | Project Title | |
| Author | dimore01 | File Name | C:\...\US1\atrio\reticolare.mgb |

## 1. Design Information

Design Code : Eurocode3:05
Unit System : kN, m
Member No : 629
Material : S275 (No:1)
(Fy = 275000, Es = 210000000)
Section Name : catene fi10 (No:3)
(Built-up Section).
Member Length : 10.8917

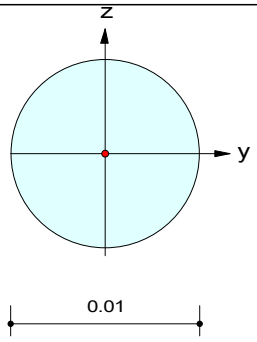


## 2. Member Forces

Axial Force Fxx = 11.6167 (LCB: 2, POS:J)
Bending Moments My = 0.00000, Mz = 0.00000
End Moments Myi = 0.00000, Myj = 0.00000 (for Lb)
Myi = 0.00000, Myj = 0.00000 (for Ly)
Mzi = 0.00000, Mzj = 0.00000 (for Lz)
Shear Forces Fyy = 0.00000 (LCB: 1, POS:J)
Fzz = 0.00000 (LCB: 1, POS:J)

Outer Dia. 0.01000

| | | | |
|---|---|---|---|
| Area | 0.00008 | Asz | 0.00007 |
| Qyb | 0.00001 | Qzb | 0.00001 |
| Iyy | 0.00000 | Izz | 0.00000 |
| Ybar | 0.00500 | Zbar | 0.00500 |
| Wely | 0.00000 | Welz | 0.00000 |
| ry | 0.00250 | rz | 0.00250 |

## 3. Design Parameters

Unbraced Lengths Ly = 10.8917, Lz = 10.8917, Lb = 10.8917
Effective Length Factors Ky = 1.00, Kz = 1.00
Equivalent Uniform Moment Factors Cmy = 1.00, Cmz = 1.00, CmLT = 1.00

## 4. Checking Results

Slenderness Ratio
L/r =4356.7 > 300.0 (LCB: 2)..... N.G
Axial Resistance
N_Ed/Nt_Rd = 11.6167/20.5700 = 0.565 < 1.000 ..... O.K
Bending Resistance
M_Edy/M_Rdy = 0.00000/0.04365 = 0.000 < 1.000 ..... O.K
M_Edz/M_Rdz = 0.00000/0.04365 = 0.000 < 1.000 ..... O.K
Combined Resistance
RNRd = MAX[ M_Edy/Mny_Rd, M_Edz/Mnz_Rd ]
Rcom = N_Ed/(A*fy/Gamma_M0), Rbend = M_Edy/My_Rd + M_Edz/Mz_Rd
Rmax = MAX[ RNRd, (Rcom+Rbend) ] = 0.565 < 1.000 ..... O.K
Shear Resistance
V_Edy/Vy_Rd = 0.000 < 1.000 ..... O.K
V_Edz/Vz_Rd = 0.000 < 1.000 ..... O.K

# Steel Checking Result

| | | | |
|---|---|---|---|
| Company | | Project Title | |
| Author | dimore01 | File Name | C:\...\US1\atrio\reticolare.mgb |

## 1. Design Information

Design Code : Eurocode3:05
Unit System : kN, m
Member No : 628
Material : S275 (No:1)
(Fy = 275000, Es = 210000000)
Section Name : catene fi10 (No:3)
(Built-up Section).
Member Length : 12.7657

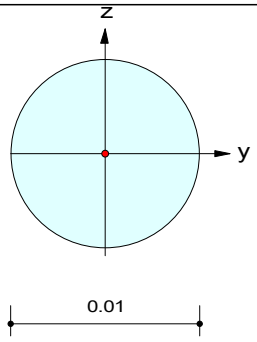


## 2. Member Forces

Axial Force Fxx = 11.5629 (LCB: 2, POS:J)
Bending Moments My = 0.00000, Mz = 0.00000
End Moments Myi = 0.00000, Myj = 0.00000 (for Lb)
Myi = 0.00000, Myj = 0.00000 (for Ly)
Mzi = 0.00000, Mzj = 0.00000 (for Lz)
Shear Forces Fyy = 0.00000 (LCB: 1, POS:J)
Fzz = 0.00000 (LCB: 1, POS:J)

Outer Dia. 0.01000

| | | | |
|---|---|---|---|
| Area | 0.00008 | Asz | 0.00007 |
| Qyb | 0.00001 | Qzb | 0.00001 |
| Iyy | 0.00000 | Izz | 0.00000 |
| Ybar | 0.00500 | Zbar | 0.00500 |
| Wely | 0.00000 | Welz | 0.00000 |
| ry | 0.00250 | rz | 0.00250 |

## 3. Design Parameters

Unbraced Lengths Ly = 12.7657, Lz = 12.7657, Lb = 12.7657
Effective Length Factors Ky = 1.00, Kz = 1.00
Equivalent Uniform Moment Factors Cmy = 1.00, Cmz = 1.00, CmLT = 1.00

## 4. Checking Results

Slenderness Ratio
L/r =5106.3 > 300.0 (LCB: 2)..... N.G
Axial Resistance
N_Ed/Nt_Rd = 11.5629/20.5700 = 0.562 < 1.000 ..... O.K
Bending Resistance
M_Edy/M_Rdy = 0.00000/0.04365 = 0.000 < 1.000 ..... O.K
M_Edz/M_Rdz = 0.00000/0.04365 = 0.000 < 1.000 ..... O.K
Combined Resistance
RNRd = MAX[ M_Edy/Mny_Rd, M_Edz/Mnz_Rd ]
Rcom = N_Ed/(A*fy/Gamma_M0), Rbend = M_Edy/My_Rd + M_Edz/Mz_Rd
Rmax = MAX[ RNRd, (Rcom+Rbend) ] = 0.562 < 1.000 ..... O.K
Shear Resistance
V_Edy/Vy_Rd = 0.000 < 1.000 ..... O.K
V_Edz/Vz_Rd = 0.000 < 1.000 ..... O.K

# Steel Checking Result

| | | | |
|---|---|---|---|
| Company | | Project Title | |
| Author | dimore01 | File Name | C:\...\US1\atrio\reticolare.mgb |

## 1. Design Information

Design Code : Eurocode3:05
Unit System : kN, m
Member No : 627
Material : S275 (No:1)
(Fy = 275000, Es = 210000000)
Section Name : catene fi10 (No:3)
(Built-up Section).
Member Length : 14.6397

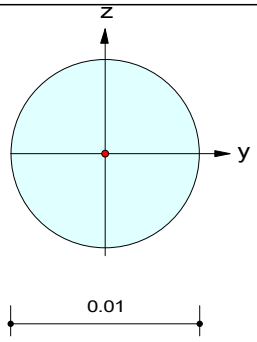


## 2. Member Forces

Axial Force Fxx = 11.5232 (LCB: 2, POS:J)
Bending Moments My = 0.00000, Mz = 0.00000
End Moments Myi = 0.00000, Myj = 0.00000 (for Lb)
Myi = 0.00000, Myj = 0.00000 (for Ly)
Mzi = 0.00000, Mzj = 0.00000 (for Lz)
Shear Forces Fyy = 0.00000 (LCB: 1, POS:J)
Fzz = 0.00000 (LCB: 1, POS:J)

Outer Dia. 0.01000

| | | | |
|---|---|---|---|
| Area | 0.00008 | Asz | 0.00007 |
| Qyb | 0.00001 | Qzb | 0.00001 |
| Iyy | 0.00000 | Izz | 0.00000 |
| Ybar | 0.00500 | Zbar | 0.00500 |
| Wely | 0.00000 | Welz | 0.00000 |
| ry | 0.00250 | rz | 0.00250 |

## 3. Design Parameters

Unbraced Lengths Ly = 14.6397, Lz = 14.6397, Lb = 14.6397
Effective Length Factors Ky = 1.00, Kz = 1.00
Equivalent Uniform Moment Factors Cmy = 1.00, Cmz = 1.00, CmLT = 1.00

## 4. Checking Results

Slenderness Ratio
L/r =5855.9 > 300.0 (LCB: 2)..... N.G
Axial Resistance
N_Ed/Nt_Rd = 11.5232/20.5700 = 0.560 < 1.000 ..... O.K
Bending Resistance
M_Edy/M_Rdy = 0.00000/0.04365 = 0.000 < 1.000 ..... O.K
M_Edz/M_Rdz = 0.00000/0.04365 = 0.000 < 1.000 ..... O.K
Combined Resistance
RNRd = MAX[ M_Edy/Mny_Rd, M_Edz/Mnz_Rd ]
Rcom = N_Ed/(A*fy/Gamma_M0), Rbend = M_Edy/My_Rd + M_Edz/Mz_Rd
Rmax = MAX[ RNRd, (Rcom+Rbend) ] = 0.560 < 1.000 ..... O.K
Shear Resistance
V_Edy/Vy_Rd = 0.000 < 1.000 ..... O.K
V_Edz/Vz_Rd = 0.000 < 1.000 ..... O.K

# Steel Checking Result

| | | | |
|---|---|---|---|
| Company | | Project Title | |
| Author | dimore01 | File Name | C:\...\US1\atrio\reticolare.mgb |

## 1. Design Information

Design Code : Eurocode3:05
Unit System : kN, m
Member No : 626
Material : S275 (No:1)
(Fy = 275000, Es = 210000000)
Section Name : catene fi10 (No:3)
(Built-up Section).
Member Length : 14.6585

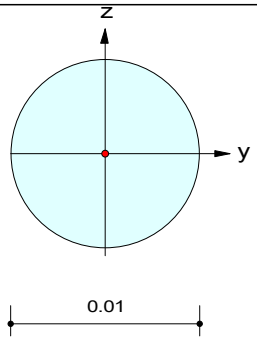


## 2. Member Forces

Axial Force Fxx = 0.93434 (LCB: 1, POS:J)
Bending Moments My = 0.00000, Mz = 0.00000
End Moments Myi = 0.00000, Myj = 0.00000 (for Lb)
Myi = 0.00000, Myj = 0.00000 (for Ly)
Mzi = 0.00000, Mzj = 0.00000 (for Lz)
Shear Forces Fyy = 0.00000 (LCB: 1, POS:J)
Fzz = 0.00000 (LCB: 1, POS:J)

Outer Dia. 0.01000

| | | | |
|---|---|---|---|
| Area | 0.00008 | Asz | 0.00007 |
| Qyb | 0.00001 | Qzb | 0.00001 |
| Iyy | 0.00000 | Izz | 0.00000 |
| Ybar | 0.00500 | Zbar | 0.00500 |
| Wely | 0.00000 | Welz | 0.00000 |
| ry | 0.00250 | rz | 0.00250 |

## 3. Design Parameters

Unbraced Lengths Ly = 14.6585, Lz = 14.6585, Lb = 14.6585
Effective Length Factors Ky = 1.00, Kz = 1.00
Equivalent Uniform Moment Factors Cmy = 1.00, Cmz = 1.00, CmLT = 1.00

## 4. Checking Results

Slenderness Ratio
L/r =5863.4 > 300.0 (LCB: 2)..... N.G
Axial Resistance
N_Ed/Nt_Rd = 0.9343/20.5700 = 0.045 < 1.000 ..... O.K
Bending Resistance
M_Edy/M_Rdy = 0.00000/0.04365 = 0.000 < 1.000 ..... O.K
M_Edz/M_Rdz = 0.00000/0.04365 = 0.000 < 1.000 ..... O.K
Combined Resistance
RNRd = MAX[ M_Edy/Mny_Rd, M_Edz/Mnz_Rd ]
Rcom = N_Ed/(A*fy/Gamma_M0), Rbend = M_Edy/My_Rd + M_Edz/Mz_Rd
Rmax = MAX[ RNRd, (Rcom+Rbend) ] = 0.045 < 1.000 ..... O.K
Shear Resistance
V_Edy/Vy_Rd = 0.000 < 1.000 ..... O.K
V_Edz/Vz_Rd = 0.000 < 1.000 ..... O.K

# Steel Checking Result

| | | | |
|---|---|---|---|
| Company | | Project Title | |
| Author | dimore01 | File Name | C:\...\US1\atrio\reticolare.mgb |

## 1. Design Information

Design Code : Eurocode3:05
Unit System : kN, m
Member No : 625
Material : S275 (No:1)
(Fy = 275000, Es = 210000000)
Section Name : catene fi10 (No:3)
(Built-up Section).
Member Length : 12.7844

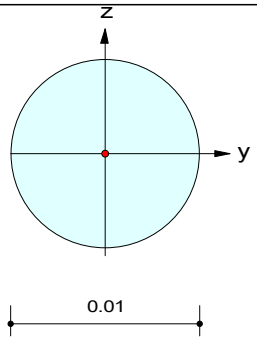


## 2. Member Forces

Axial Force Fxx = 2.68123 (LCB: 1, POS:J)
Bending Moments My = 0.00000, Mz = 0.00000
End Moments Myi = 0.00000, Myj = 0.00000 (for Lb)
Myi = 0.00000, Myj = 0.00000 (for Ly)
Mzi = 0.00000, Mzj = 0.00000 (for Lz)
Shear Forces Fyy = 0.00000 (LCB: 1, POS:J)
Fzz = 0.00000 (LCB: 1, POS:J)

Outer Dia. 0.01000

| | | | |
|---|---|---|---|
| Area | 0.00008 | Asz | 0.00007 |
| Qyb | 0.00001 | Qzb | 0.00001 |
| Iyy | 0.00000 | Izz | 0.00000 |
| Ybar | 0.00500 | Zbar | 0.00500 |
| Wely | 0.00000 | Welz | 0.00000 |
| ry | 0.00250 | rz | 0.00250 |

## 3. Design Parameters

Unbraced Lengths Ly = 12.7844, Lz = 12.7844, Lb = 12.7844
Effective Length Factors Ky = 1.00, Kz = 1.00
Equivalent Uniform Moment Factors Cmy = 1.00, Cmz = 1.00, CmLT = 1.00

## 4. Checking Results

Slenderness Ratio
L/r =5113.8 > 300.0 (LCB: 2)..... N.G
Axial Resistance
N_Ed/Nt_Rd = 2.6812/20.5700 = 0.130 < 1.000 ..... O.K
Bending Resistance
M_Edy/M_Rdy = 0.00000/0.04365 = 0.000 < 1.000 ..... O.K
M_Edz/M_Rdz = 0.00000/0.04365 = 0.000 < 1.000 ..... O.K
Combined Resistance
RNRd = MAX[ M_Edy/Mny_Rd, M_Edz/Mnz_Rd ]
Rcom = N_Ed/(A*fy/Gamma_M0), Rbend = M_Edy/My_Rd + M_Edz/Mz_Rd
Rmax = MAX[ RNRd, (Rcom+Rbend) ] = 0.130 < 1.000 ..... O.K
Shear Resistance
V_Edy/Vy_Rd = 0.000 < 1.000 ..... O.K
V_Edz/Vz_Rd = 0.000 < 1.000 ..... O.K

# Steel Checking Result

| | | | |
|---|---|---|---|
| Company | | Project Title | |
| Author | dimore01 | File Name | C:\...\US1\atrio\reticolare.mgb |

## 1. Design Information

Design Code : Eurocode3:05
Unit System : kN, m
Member No : 624
Material : S275 (No:1)
(Fy = 275000, Es = 210000000)
Section Name : catene fi10 (No:3)
(Built-up Section).
Member Length : 10.9103

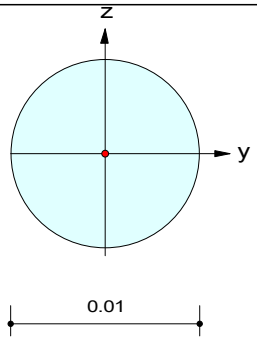


## 2. Member Forces

Axial Force Fxx = 4.64411 (LCB: 1, POS:J)
Bending Moments My = 0.00000, Mz = 0.00000
End Moments Myi = 0.00000, Myj = 0.00000 (for Lb)
Myi = 0.00000, Myj = 0.00000 (for Ly)
Mzi = 0.00000, Mzj = 0.00000 (for Lz)
Shear Forces Fyy = 0.00000 (LCB: 1, POS:J)
Fzz = 0.00000 (LCB: 1, POS:J)

Outer Dia. 0.01000

| | | | |
|---|---|---|---|
| Area | 0.00008 | Asz | 0.00007 |
| Qyb | 0.00001 | Qzb | 0.00001 |
| Iyy | 0.00000 | Izz | 0.00000 |
| Ybar | 0.00500 | Zbar | 0.00500 |
| Wely | 0.00000 | Welz | 0.00000 |
| ry | 0.00250 | rz | 0.00250 |

## 3. Design Parameters

Unbraced Lengths Ly = 10.9103, Lz = 10.9103, Lb = 10.9103
Effective Length Factors Ky = 1.00, Kz = 1.00
Equivalent Uniform Moment Factors Cmy = 1.00, Cmz = 1.00, CmLT = 1.00

## 4. Checking Results

Slenderness Ratio
L/r =4364.1 > 300.0 (LCB: 2)..... N.G
Axial Resistance
N_Ed/Nt_Rd = 4.6441/20.5700 = 0.226 < 1.000 ..... O.K
Bending Resistance
M_Edy/M_Rdy = 0.00000/0.04365 = 0.000 < 1.000 ..... O.K
M_Edz/M_Rdz = 0.00000/0.04365 = 0.000 < 1.000 ..... O.K
Combined Resistance
RNRd = MAX[ M_Edy/Mny_Rd, M_Edz/Mnz_Rd ]
Rcom = N_Ed/(A*fy/Gamma_M0), Rbend = M_Edy/My_Rd + M_Edz/Mz_Rd
Rmax = MAX[ RNRd, (Rcom+Rbend) ] = 0.226 < 1.000 ..... O.K
Shear Resistance
V_Edy/Vy_Rd = 0.000 < 1.000 ..... O.K
V_Edz/Vz_Rd = 0.000 < 1.000 ..... O.K

# Steel Checking Result

| | | | |
|---|---|---|---|
| Company | | Project Title | |
| Author | dimore01 | File Name | C:\...\US1\atrio\reticolare.mgb |

## 1. Design Information

Design Code : Eurocode3:05
Unit System : kN, m
Member No : 623
Material : S275 (No:1)
(Fy = 275000, Es = 210000000)
Section Name : catene fi10 (No:3)
(Built-up Section).
Member Length : 9.03649

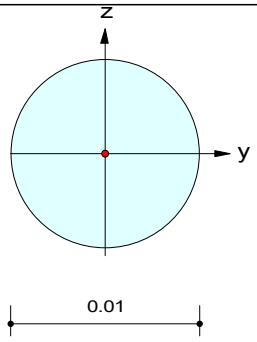


## 2. Member Forces

Axial Force Fxx = 6.38312 (LCB: 1, POS:J)
Bending Moments My = 0.00000, Mz = 0.00000
End Moments Myi = 0.00000, Myj = 0.00000 (for Lb)
Myi = 0.00000, Myj = 0.00000 (for Ly)
Mzi = 0.00000, Mzj = 0.00000 (for Lz)
Shear Forces Fyy = 0.00000 (LCB: 1, POS:J)
Fzz = 0.00000 (LCB: 1, POS:J)

Outer Dia. 0.01000

| | | | |
|---|---|---|---|
| Area | 0.00008 | Asz | 0.00007 |
| Qyb | 0.00001 | Qzb | 0.00001 |
| Iyy | 0.00000 | Izz | 0.00000 |
| Ybar | 0.00500 | Zbar | 0.00500 |
| Wely | 0.00000 | Welz | 0.00000 |
| ry | 0.00250 | rz | 0.00250 |

## 3. Design Parameters

Unbraced Lengths Ly = 9.03649, Lz = 9.03649, Lb = 9.03649
Effective Length Factors Ky = 1.00, Kz = 1.00
Equivalent Uniform Moment Factors Cmy = 1.00, Cmz = 1.00, CmLT = 1.00

## 4. Checking Results

Slenderness Ratio
L/r =3614.6 > 300.0 (LCB: 2)..... N.G
Axial Resistance
N_Ed/Nt_Rd = 6.3831/20.5700 = 0.310 < 1.000 ..... O.K
Bending Resistance
M_Edy/M_Rdy = 0.00000/0.04365 = 0.000 < 1.000 ..... O.K
M_Edz/M_Rdz = 0.00000/0.04365 = 0.000 < 1.000 ..... O.K
Combined Resistance
RNRd = MAX[ M_Edy/Mny_Rd, M_Edz/Mnz_Rd ]
Rcom = N_Ed/(A*fy/Gamma_M0), Rbend = M_Edy/My_Rd + M_Edz/Mz_Rd
Rmax = MAX[ RNRd, (Rcom+Rbend) ] = 0.310 < 1.000 ..... O.K
Shear Resistance
V_Edy/Vy_Rd = 0.000 < 1.000 ..... O.K
V_Edz/Vz_Rd = 0.000 < 1.000 ..... O.K

# Steel Checking Result

| | | | |
|---|---|---|---|
| Company | | Project Title | |
| Author | dimore01 | File Name | C:\...\US1\atrio\reticolare.mgb |

## 1. Design Information

Design Code : Eurocode3:05
Unit System : kN, m
Member No : 622
Material : S275 (No:1)
(Fy = 275000, Es = 210000000)
Section Name : catene fi10 (No:3)
(Built-up Section).
Member Length : 7.16294

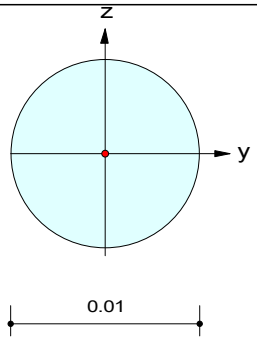


## 2. Member Forces

Axial Force Fxx = 8.02834 (LCB: 1, POS:J)
Bending Moments My = 0.00000, Mz = 0.00000
End Moments Myi = 0.00000, Myj = 0.00000 (for Lb)
Myi = 0.00000, Myj = 0.00000 (for Ly)
Mzi = 0.00000, Mzj = 0.00000 (for Lz)
Shear Forces Fyy = 0.00000 (LCB: 1, POS:J)
Fzz = 0.00000 (LCB: 1, POS:J)

Outer Dia. 0.01000

| | | | |
|---|---|---|---|
| Area | 0.00008 | Asz | 0.00007 |
| Qyb | 0.00001 | Qzb | 0.00001 |
| Iyy | 0.00000 | Izz | 0.00000 |
| Ybar | 0.00500 | Zbar | 0.00500 |
| Wely | 0.00000 | Welz | 0.00000 |
| ry | 0.00250 | rz | 0.00250 |

## 3. Design Parameters

Unbraced Lengths Ly = 7.16294, Lz = 7.16294, Lb = 7.16294
Effective Length Factors Ky = 1.00, Kz = 1.00
Equivalent Uniform Moment Factors Cmy = 1.00, Cmz = 1.00, CmLT = 1.00

## 4. Checking Results

Slenderness Ratio
L/r =2865.2 > 300.0 (LCB: 2)..... N.G
Axial Resistance
N_Ed/Nt_Rd = 8.0283/20.5700 = 0.390 < 1.000 ..... O.K
Bending Resistance
M_Edy/M_Rdy = 0.00000/0.04365 = 0.000 < 1.000 ..... O.K
M_Edz/M_Rdz = 0.00000/0.04365 = 0.000 < 1.000 ..... O.K
Combined Resistance
RNRd = MAX[ M_Edy/Mny_Rd, M_Edz/Mnz_Rd ]
Rcom = N_Ed/(A*fy/Gamma_M0), Rbend = M_Edy/My_Rd + M_Edz/Mz_Rd
Rmax = MAX[ RNRd, (Rcom+Rbend) ] = 0.390 < 1.000 ..... O.K
Shear Resistance
V_Edy/Vy_Rd = 0.000 < 1.000 ..... O.K
V_Edz/Vz_Rd = 0.000 < 1.000 ..... O.K

# Steel Checking Result

| | | | |
|---|---|---|---|
| Company | | Project Title | |
| Author | dimore01 | File Name | C:\...\US1\atrio\reticolare.mgb |

## 1. Design Information

Design Code : Eurocode3:05
Unit System : kN, m
Member No : 621
Material : S275 (No:1)
(Fy = 275000, Es = 210000000)
Section Name : catene fi10 (No:3)
(Built-up Section).
Member Length : 5.29004

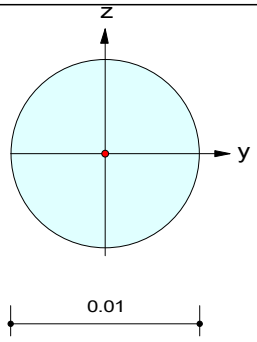


## 2. Member Forces

Axial Force Fxx = 9.48704 (LCB: 1, POS:J)
Bending Moments My = 0.00000, Mz = 0.00000
End Moments Myi = 0.00000, Myj = 0.00000 (for Lb)
Myi = 0.00000, Myj = 0.00000 (for Ly)
Mzi = 0.00000, Mzj = 0.00000 (for Lz)
Shear Forces Fyy = 0.00000 (LCB: 1, POS:J)
Fzz = 0.00000 (LCB: 1, POS:J)

Outer Dia. 0.01000

| | | | |
|---|---|---|---|
| Area | 0.00008 | Asz | 0.00007 |
| Qyb | 0.00001 | Qzb | 0.00001 |
| Iyy | 0.00000 | Izz | 0.00000 |
| Ybar | 0.00500 | Zbar | 0.00500 |
| Wely | 0.00000 | Welz | 0.00000 |
| ry | 0.00250 | rz | 0.00250 |

## 3. Design Parameters

Unbraced Lengths Ly = 5.29004, Lz = 5.29004, Lb = 5.29004
Effective Length Factors Ky = 1.00, Kz = 1.00
Equivalent Uniform Moment Factors Cmy = 1.00, Cmz = 1.00, CmLT = 1.00

## 4. Checking Results

Slenderness Ratio
L/r =2116.0 > 300.0 (LCB: 2)..... N.G
Axial Resistance
N_Ed/Nt_Rd = 9.4870/20.5700 = 0.461 < 1.000 ..... O.K
Bending Resistance
M_Edy/M_Rdy = 0.00000/0.04365 = 0.000 < 1.000 ..... O.K
M_Edz/M_Rdz = 0.00000/0.04365 = 0.000 < 1.000 ..... O.K
Combined Resistance
RNRd = MAX[ M_Edy/Mny_Rd, M_Edz/Mnz_Rd ]
Rcom = N_Ed/(A*fy/Gamma_M0), Rbend = M_Edy/My_Rd + M_Edz/Mz_Rd
Rmax = MAX[ RNRd, (Rcom+Rbend) ] = 0.461 < 1.000 ..... O.K
Shear Resistance
V_Edy/Vy_Rd = 0.000 < 1.000 ..... O.K
V_Edz/Vz_Rd = 0.000 < 1.000 ..... O.K

# Steel Checking Result

| | | | |
|---|---|---|---|
| Company | | Project Title | |
| Author | dimore01 | File Name | C:\...\US1\atrio\reticolare.mgb |

## 1. Design Information

Design Code : Eurocode3:05
Unit System : kN, m
Member No : 620
Material : S275 (No:1)
(Fy = 275000, Es = 210000000)
Section Name : catene fi10 (No:3)
(Built-up Section).
Member Length : 3.41884

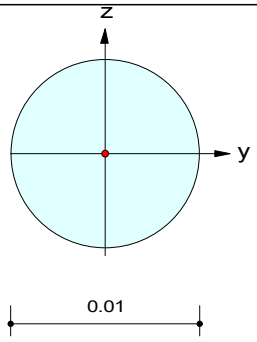


## 2. Member Forces

Axial Force Fxx = 9.85341 (LCB: 1, POS:J)
Bending Moments My = 0.00000, Mz = 0.00000
End Moments Myi = 0.00000, Myj = 0.00000 (for Lb)
Myi = 0.00000, Myj = 0.00000 (for Ly)
Mzi = 0.00000, Mzj = 0.00000 (for Lz)
Shear Forces Fyy = 0.00000 (LCB: 1, POS:J)
Fzz = 0.00000 (LCB: 1, POS:J)

Outer Dia. 0.01000

| | | | |
|---|---|---|---|
| Area | 0.00008 | Asz | 0.00007 |
| Qyb | 0.00001 | Qzb | 0.00001 |
| Iyy | 0.00000 | Izz | 0.00000 |
| Ybar | 0.00500 | Zbar | 0.00500 |
| Wely | 0.00000 | Welz | 0.00000 |
| ry | 0.00250 | rz | 0.00250 |

## 3. Design Parameters

Unbraced Lengths Ly = 3.41884, Lz = 3.41884, Lb = 3.41884
Effective Length Factors Ky = 1.00, Kz = 1.00
Equivalent Uniform Moment Factors Cmy = 1.00, Cmz = 1.00, CmLT = 1.00

## 4. Checking Results

Slenderness Ratio
L/r =1367.5 > 300.0 (LCB: 2)..... N.G
Axial Resistance
N_Ed/Nt_Rd = 9.8534/20.5700 = 0.479 < 1.000 ..... O.K
Bending Resistance
M_Edy/M_Rdy = 0.00000/0.04365 = 0.000 < 1.000 ..... O.K
M_Edz/M_Rdz = 0.00000/0.04365 = 0.000 < 1.000 ..... O.K
Combined Resistance
RNRd = MAX[ M_Edy/Mny_Rd, M_Edz/Mnz_Rd ]
Rcom = N_Ed/(A*fy/Gamma_M0), Rbend = M_Edy/My_Rd + M_Edz/Mz_Rd
Rmax = MAX[ RNRd, (Rcom+Rbend) ] = 0.479 < 1.000 ..... O.K
Shear Resistance
V_Edy/Vy_Rd = 0.000 < 1.000 ..... O.K
V_Edz/Vz_Rd = 0.000 < 1.000 ..... O.K

# Steel Checking Result

| | | | |
|---|---|---|---|
| Company | | Project Title | |
| Author | dimore01 | File Name | C:\...\US1\atrio\reticolare.mgb |

## 1. Design Information

Design Code : Eurocode3:05
Unit System : kN, m
Member No : 619
Material : S275 (No:1)
(Fy = 275000, Es = 210000000)
Section Name : catene fi10 (No:3)
(Built-up Section).
Member Length : 1.55554

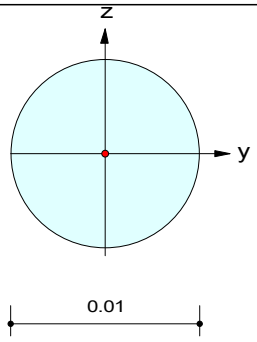


## 2. Member Forces

Axial Force Fxx = 8.65791 (LCB: 1, POS:J)
Bending Moments My = 0.00000, Mz = 0.00000
End Moments Myi = 0.00000, Myj = 0.00000 (for Lb)
Myi = 0.00000, Myj = 0.00000 (for Ly)
Mzi = 0.00000, Mzj = 0.00000 (for Lz)
Shear Forces Fyy = 0.00000 (LCB: 1, POS:J)
Fzz = 0.00000 (LCB: 1, POS:J)

Outer Dia. 0.01000

| | | | |
|---|---|---|---|
| Area | 0.00008 | Asz | 0.00007 |
| Qyb | 0.00001 | Qzb | 0.00001 |
| Iyy | 0.00000 | Izz | 0.00000 |
| Ybar | 0.00500 | Zbar | 0.00500 |
| Wely | 0.00000 | Welz | 0.00000 |
| ry | 0.00250 | rz | 0.00250 |

## 3. Design Parameters

Unbraced Lengths Ly = 1.55554, Lz = 1.55554, Lb = 1.55554
Effective Length Factors Ky = 1.00, Kz = 1.00
Equivalent Uniform Moment Factors Cmy = 1.00, Cmz = 1.00, CmLT = 1.00

## 4. Checking Results

Slenderness Ratio
L/r = 622.2 > 300.0 (LCB: 2)..... N.G
Axial Resistance
N_Ed/Nt_Rd = 8.6579/20.5700 = 0.421 < 1.000 ..... O.K
Bending Resistance
M_Edy/M_Rdy = 0.00000/0.04365 = 0.000 < 1.000 ..... O.K
M_Edz/M_Rdz = 0.00000/0.04365 = 0.000 < 1.000 ..... O.K
Combined Resistance
RNRd = MAX[ M_Edy/Mny_Rd, M_Edz/Mnz_Rd ]
Rcom = N_Ed/(A*fy/Gamma_M0), Rbend = M_Edy/My_Rd + M_Edz/Mz_Rd
Rmax = MAX[ RNRd, (Rcom+Rbend) ] = 0.421 < 1.000 ..... O.K
Shear Resistance
V_Edy/Vy_Rd = 0.000 < 1.000 ..... O.K
V_Edz/Vz_Rd = 0.000 < 1.000 ..... O.K

# Steel Checking Result

| | | | |
|---|---|---|---|
| Company | | Project Title | |
| Author | dimore01 | File Name | C:\...\US1\atrio\reticolare.mgb |

## 1. Design Information

Design Code : Eurocode3:05
Unit System : kN, m
Member No : 618
Material : S275 (No:1)
(Fy = 275000, Es = 210000000)
Section Name : HEA140 (No:1)
(Rolled : HEA140).
Member Length : 12.8600

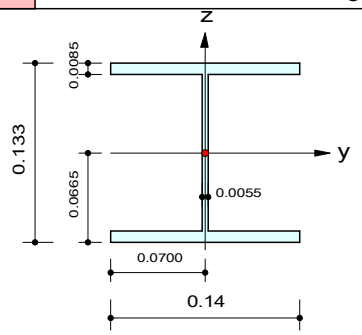


## 2. Member Forces

Axial Force Fxx = -50.093 (LCB: 1, POS:J)
Bending Moments My = 0.00000, Mz = 0.00000
End Moments Myi = 0.00000, Myj = 0.00000 (for Lb)
Myi = 0.00000, Myj = 0.00000 (for Ly)
Mzi = 0.00000, Mzj = 0.00000 (for Lz)
Shear Forces Fyy = 0.00000 (LCB: 1, POS:J)
Fzz = 0.00000 (LCB: 1, POS:J)

| | | | |
|---|---|---|---|
| Depth | 0.13300 | Web Thick | 0.00550 |
| Top F Width | 0.14000 | Top F Thick | 0.00850 |
| Bot.F Width | 0.14000 | Bot.F Thick | 0.00850 |
| Area | 0.00314 | Asz | 0.00073 |
| Qyb | 0.01515 | Qzb | 0.00245 |
| Iyy | 0.00001 | Izz | 0.00000 |
| Ybar | 0.07000 | Zbar | 0.06650 |
| Wely | 0.00016 | Welz | 0.00006 |
| ry | 0.05730 | rz | 0.03520 |

## 3. Design Parameters

Unbraced Lengths Ly = 5.71000, Lz = 5.71000, Lb = 5.71000
Effective Length Factors Ky = 1.00, Kz = 1.00
Equivalent Uniform Moment Factors Cmy = 1.00, Cmz = 1.00, CmLT = 1.00

## 4. Checking Results

Slenderness Ratio
KL/r = 162.2 < 200.0 (LCB: 2)..... O.K
Axial Resistance
N_Ed/MIN[Nc_Rd, Nb_Rd] = 50.093/181.143 = 0.277 < 1.000 ..... O.K
Bending Resistance
M_Edy/M_Rdy = 0.0000/45.4143 = 0.000 < 1.000 ..... O.K
M_Edz/M_Rdz = 0.0000/22.0464 = 0.000 < 1.000 ..... O.K
Combined Resistance
RNRd = MAX[ M_Edy/Mny_Rd, M_Edz/Mnz_Rd ]
Rcom = N_Ed/(A*fy/Gamma_M0), Rbend = M_Edy/My_Rd + M_Edz/Mz_Rd
Rc_LT1 = N_Ed/(Xiy*A*fy/Gamma_M1)
Rb_LT1 = (kyy*M_Edy)/(Xi_LT*Wply*fy/Gamma_M1) + (kyz*Msdz)/(Wplz*fy/Gamma_M1)
Rc_LT2 = N_Ed/(Xiz*A*fy/Gamma_M1)
Rb_LT2 = (Kzy*M_Edy)/(Xi_LT*Wply*fy/Gamma_M1) + (Kzz*Msdz)/(Wplz*fy/Gamma_M1)
Rmax = MAX[ RNRd, (Rcom+Rbend), MAX(Rc_LT1+Rb_LT1, Rc_LT2+Rb_LT2) ] = 0.277 < 1.000 .. O.K
Shear Resistance
V_Edy/Vy_Rd = 0.000 < 1.000 ..... O.K
V_Edz/Vz_Rd = 0.000 < 1.000 ..... O.K

# Steel Checking Result

| | | | |
|---|---|---|---|
| Company | | Project Title | |
| Author | dimore01 | File Name | C:\...\US1\atrio\reticolare.mgb |

## 1. Design Information

Design Code : Eurocode3:05
Unit System : kN, m
Member No : 617
Material : S275 (No:1)
(Fy = 275000, Es = 210000000)
Section Name : HEA140 (No:1)
(Rolled : HEA140).
Member Length : 12.8600

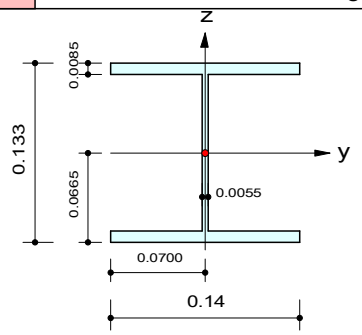


## 2. Member Forces

Axial Force Fxx = -50.744 (LCB: 1, POS:J)
Bending Moments My = 0.00000, Mz = 0.00000
End Moments Myi = 0.00000, Myj = 0.00000 (for Lb)
Myi = 0.00000, Myj = 0.00000 (for Ly)
Mzi = 0.00000, Mzj = 0.00000 (for Lz)
Shear Forces Fyy = 0.00000 (LCB: 1, POS:J)
Fzz = 0.00000 (LCB: 1, POS:J)

| | | | |
|---|---|---|---|
| Depth | 0.13300 | Web Thick | 0.00550 |
| Top F Width | 0.14000 | Top F Thick | 0.00850 |
| Bot.F Width | 0.14000 | Bot.F Thick | 0.00850 |
| Area | 0.00314 | Asz | 0.00073 |
| Qyb | 0.01515 | Qzb | 0.00245 |
| Iyy | 0.00001 | Izz | 0.00000 |
| Ybar | 0.07000 | Zbar | 0.06650 |
| Wely | 0.00016 | Welz | 0.00006 |
| ry | 0.05730 | rz | 0.03520 |

## 3. Design Parameters

Unbraced Lengths Ly = 5.71000, Lz = 5.71000, Lb = 5.71000
Effective Length Factors Ky = 1.00, Kz = 1.00
Equivalent Uniform Moment Factors Cmy = 1.00, Cmz = 1.00, CmLT = 1.00

## 4. Checking Results

Slenderness Ratio
KL/r = 162.2 < 200.0 (LCB: 2)..... O.K
Axial Resistance
N_Ed/MIN[Nc_Rd, Nb_Rd] = 50.744/181.143 = 0.280 < 1.000 ..... O.K
Bending Resistance
M_Edy/M_Rdy = 0.0000/45.4143 = 0.000 < 1.000 ..... O.K
M_Edz/M_Rdz = 0.0000/22.0464 = 0.000 < 1.000 ..... O.K
Combined Resistance
RNRd = MAX[ M_Edy/Mny_Rd, M_Edz/Mnz_Rd ]
Rcom = N_Ed/(A*fy/Gamma_M0), Rbend = M_Edy/My_Rd + M_Edz/Mz_Rd
Rc_LT1 = N_Ed/(Xiy*A*fy/Gamma_M1)
Rb_LT1 = (kyy*M_Edy)/(Xi_LT*Wply*fy/Gamma_M1) + (kyz*Msdz)/(Wplz*fy/Gamma_M1)
Rc_LT2 = N_Ed/(Xiz*A*fy/Gamma_M1)
Rb_LT2 = (Kzy*M_Edy)/(Xi_LT*Wply*fy/Gamma_M1) + (Kzz*Msdz)/(Wplz*fy/Gamma_M1)
Rmax = MAX[ RNRd, (Rcom+Rbend), MAX(Rc_LT1+Rb_LT1, Rc_LT2+Rb_LT2) ] = 0.280 < 1.000 .. O.K
Shear Resistance
V_Edy/Vy_Rd = 0.000 < 1.000 ..... O.K
V_Edz/Vz_Rd = 0.000 < 1.000 ..... O.K

# Steel Checking Result

| | | | |
|---|---|---|---|
| Company | | Project Title | |
| Author | dimore01 | File Name | C:\...\US1\atrio\reticolare.mgb |

## 1. Design Information

Design Code : Eurocode3:05
Unit System : kN, m
Member No : 575
Material : S235_LC2 (No:3)
(Fy = 195833, Es = 210000000)
Section Name : tubolare (No:2)
(Built-up Section).
Member Length : 9.95000

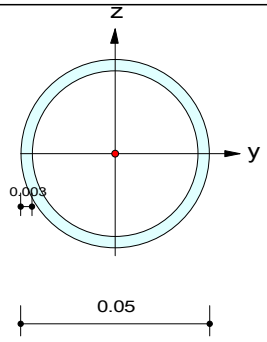


## 2. Member Forces

Axial Force Fxx = -8.5291 (LCB: 2, POS:1/2)
Bending Moments My = 0.00000, Mz = 0.00000
End Moments Myi = 0.00000, Myj = 0.00000 (for Lb)
Myi = 0.00000, Myj = 0.00000 (for Ly)
Mzi = 0.00000, Mzj = 0.00000 (for Lz)
Shear Forces Fyy = 0.00000 (LCB: 1, POS:1/2)
Fzz = 0.00000 (LCB: 1, POS:1/2)

| | | | |
|---|---|---|---|
| Outer Dia. | 0.05000 | Wall Thick | 0.00300 |
| Area | 0.00044 | Asz | 0.00022 |
| Qyb | 0.00055 | Qzb | 0.00055 |
| Iyy | 0.00000 | Izz | 0.00000 |
| Ybar | 0.02500 | Zbar | 0.02500 |
| Wely | 0.00000 | Welz | 0.00000 |
| ry | 0.01665 | rz | 0.01665 |

## 3. Design Parameters

Unbraced Lengths Ly = 1.26500, Lz = 1.26500, Lb = 1.26500
Effective Length Factors Ky = 1.00, Kz = 1.00
Equivalent Uniform Moment Factors Cmy = 1.00, Cmz = 1.00, CmLT = 1.00

## 4. Checking Results

Slenderness Ratio
KL/r = 76.0 < 200.0 (LCB: 2)..... O.K
Axial Resistance
N_Ed/MIN[Nc_Rd, Nb_Rd] = 8.5291/68.4832 = 0.125 < 1.000 ..... O.K
Bending Resistance
M_Edy/M_Rdy = 0.00000/1.23767 = 0.000 < 1.000 ..... O.K
M_Edz/M_Rdz = 0.00000/1.23767 = 0.000 < 1.000 ..... O.K
Combined Resistance
RNRd = MAX[ M_Edy/Mny_Rd, M_Edz/Mnz_Rd ]
Rcom = N_Ed/(A*fy/Gamma_M0), Rbend = M_Edy/My_Rd + M_Edz/Mz_Rd
Rc_LT1 = N_Ed/(Xiy*A*fy/Gamma_M1)
Rb_LT1 = (kyy*M_Edy)/(Xi_LT*Wply*fy/Gamma_M1) + (kyz*Msdz)/(Wplz*fy/Gamma_M1)
Rc_LT2 = N_Ed/(Xiz*A*fy/Gamma_M1)
Rb_LT2 = (Kzy*M_Edy)/(Xi_LT*Wply*fy/Gamma_M1) + (Kzz*Msdz)/(Wplz*fy/Gamma_M1)
Rmax = MAX[ RNRd, (Rcom+Rbend), MAX(Rc_LT1+Rb_LT1, Rc_LT2+Rb_LT2) ] = 0.125 < 1.000 .. O.K
Torsion Strength
T_Ed/T_Rd = 0.00000/1.05796 = 0.000 < 1.000 ..... O.K
Shear Resistance
V_Edy/Vy_Rd = 0.000 < 1.000 ..... O.K
V_Edz/Vz_Rd = 0.000 < 1.000 ..... O.K

# Steel Checking Result

| | | | |
|---|---|---|---|
| Company | | Project Title | |
| Author | dimore01 | File Name | C:\...\US1\atrio\reticolare.mgb |

## 1. Design Information

Design Code : Eurocode3:05
Unit System : kN, m
Member No : 542
Material : S235_LC2 (No:3)
(Fy = 195833, Es = 210000000)
Section Name : tubolare (No:2)
(Built-up Section).
Member Length : 9.95000

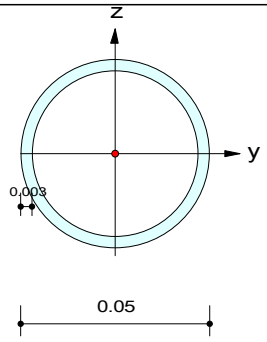


## 2. Member Forces

Axial Force Fxx = -7.2100 (LCB: 2, POS:1/2)
Bending Moments My = 0.00000, Mz = 0.00000
End Moments Myi = 0.00000, Myj = 0.00000 (for Lb)
Myi = 0.00000, Myj = 0.00000 (for Ly)
Mzi = 0.00000, Mzj = 0.00000 (for Lz)
Shear Forces Fyy = 0.00000 (LCB: 1, POS:1/2)
Fzz = 0.00000 (LCB: 1, POS:1/2)

| | | | |
|---|---|---|---|
| Outer Dia. | 0.05000 | Wall Thick | 0.00300 |
| Area | 0.00044 | Asz | 0.00022 |
| Qyb | 0.00055 | Qzb | 0.00055 |
| Iyy | 0.00000 | Izz | 0.00000 |
| Ybar | 0.02500 | Zbar | 0.02500 |
| Wely | 0.00000 | Welz | 0.00000 |
| ry | 0.01665 | rz | 0.01665 |

## 3. Design Parameters

Unbraced Lengths Ly = 1.26500, Lz = 1.26500, Lb = 1.26500
Effective Length Factors Ky = 1.00, Kz = 1.00
Equivalent Uniform Moment Factors Cmy = 1.00, Cmz = 1.00, CmLT = 1.00

## 4. Checking Results

Slenderness Ratio
KL/r = 76.0 < 200.0 (LCB: 2)..... O.K
Axial Resistance
N_Ed/MIN[Nc_Rd, Nb_Rd] = 7.2100/68.4832 = 0.105 < 1.000 ..... O.K
Bending Resistance
M_Edy/M_Rdy = 0.00000/1.23767 = 0.000 < 1.000 ..... O.K
M_Edz/M_Rdz = 0.00000/1.23767 = 0.000 < 1.000 ..... O.K
Combined Resistance
RNRd = MAX[ M_Edy/Mny_Rd, M_Edz/Mnz_Rd ]
Rcom = N_Ed/(A*fy/Gamma_M0), Rbend = M_Edy/My_Rd + M_Edz/Mz_Rd
Rc_LT1 = N_Ed/(Xiy*A*fy/Gamma_M1)
Rb_LT1 = (kyy*M_Edy)/(Xi_LT*Wply*fy/Gamma_M1) + (kyz*Msdz)/(Wplz*fy/Gamma_M1)
Rc_LT2 = N_Ed/(Xiz*A*fy/Gamma_M1)
Rb_LT2 = (Kzy*M_Edy)/(Xi_LT*Wply*fy/Gamma_M1) + (Kzz*Msdz)/(Wplz*fy/Gamma_M1)
Rmax = MAX[ RNRd, (Rcom+Rbend), MAX(Rc_LT1+Rb_LT1, Rc_LT2+Rb_LT2) ] = 0.105 < 1.000 .. O.K
Torsion Strength
T_Ed/T_Rd = 0.00000/1.05796 = 0.000 < 1.000 ..... O.K
Shear Resistance
V_Edy/Vy_Rd = 0.000 < 1.000 ..... O.K
V_Edz/Vz_Rd = 0.000 < 1.000 ..... O.K

# Steel Checking Result

| | | | |
|---|---|---|---|
| Company | | Project Title | |
| Author | dimore01 | File Name | C:\...\US1\atrio\reticolare.mgb |

## 1. Design Information

Design Code : Eurocode3:05
Unit System : kN, m
Member No : 509
Material : S235_LC2 (No:3)
(Fy = 195833, Es = 210000000)
Section Name : tubolare (No:2)
(Built-up Section).
Member Length : 9.95000

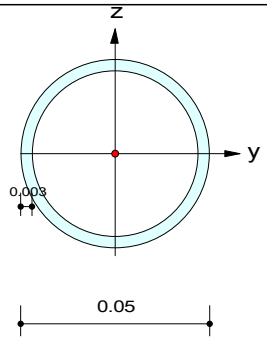


## 2. Member Forces

Axial Force Fxx = -8.9306 (LCB: 2, POS:1/2)
Bending Moments My = 0.00000, Mz = 0.00000
End Moments Myi = 0.00000, Myj = 0.00000 (for Lb)
Myi = 0.00000, Myj = 0.00000 (for Ly)
Mzi = 0.00000, Mzj = 0.00000 (for Lz)
Shear Forces Fyy = 0.00000 (LCB: 1, POS:1/2)
Fzz = 0.00000 (LCB: 1, POS:1/2)

| | | | |
|---|---|---|---|
| Outer Dia. | 0.05000 | Wall Thick | 0.00300 |
| Area | 0.00044 | Asz | 0.00022 |
| Qyb | 0.00055 | Qzb | 0.00055 |
| Iyy | 0.00000 | Izz | 0.00000 |
| Ybar | 0.02500 | Zbar | 0.02500 |
| Wely | 0.00000 | Welz | 0.00000 |
| ry | 0.01665 | rz | 0.01665 |

## 3. Design Parameters

Unbraced Lengths Ly = 1.26500, Lz = 1.26500, Lb = 1.26500
Effective Length Factors Ky = 1.00, Kz = 1.00
Equivalent Uniform Moment Factors Cmy = 1.00, Cmz = 1.00, CmLT = 1.00

## 4. Checking Results

Slenderness Ratio
KL/r = 76.0 < 200.0 (LCB: 2)..... O.K
Axial Resistance
N_Ed/MIN[Nc_Rd, Nb_Rd] = 8.9306/68.4832 = 0.130 < 1.000 ..... O.K
Bending Resistance
M_Edy/M_Rdy = 0.00000/1.23767 = 0.000 < 1.000 ..... O.K
M_Edz/M_Rdz = 0.00000/1.23767 = 0.000 < 1.000 ..... O.K
Combined Resistance
RNRd = MAX[ M_Edy/Mny_Rd, M_Edz/Mnz_Rd ]
Rcom = N_Ed/(A*fy/Gamma_M0), Rbend = M_Edy/My_Rd + M_Edz/Mz_Rd
Rc_LT1 = N_Ed/(Xiy*A*fy/Gamma_M1)
Rb_LT1 = (kyy*M_Edy)/(Xi_LT*Wply*fy/Gamma_M1) + (kyz*Msdz)/(Wplz*fy/Gamma_M1)
Rc_LT2 = N_Ed/(Xiz*A*fy/Gamma_M1)
Rb_LT2 = (Kzy*M_Edy)/(Xi_LT*Wply*fy/Gamma_M1) + (Kzz*Msdz)/(Wplz*fy/Gamma_M1)
Rmax = MAX[ RNRd, (Rcom+Rbend), MAX(Rc_LT1+Rb_LT1, Rc_LT2+Rb_LT2) ] = 0.130 < 1.000 .. O.K
Torsion Strength
T_Ed/T_Rd = 0.00000/1.05796 = 0.000 < 1.000 ..... O.K
Shear Resistance
V_Edy/Vy_Rd = 0.000 < 1.000 ..... O.K
V_Edz/Vz_Rd = 0.000 < 1.000 ..... O.K

# Steel Checking Result

| | | | |
|---|---|---|---|
| Company | | Project Title | |
| Author | dimore01 | File Name | C:\...\US1\atrio\reticolare.mgb |

## 1. Design Information

Design Code : Eurocode3:05
Unit System : kN, m
Member No : 476
Material : S235_LC2 (No:3)
(Fy = 195833, Es = 210000000)
Section Name : tubolare (No:2)
(Built-up Section).
Member Length : 9.95000

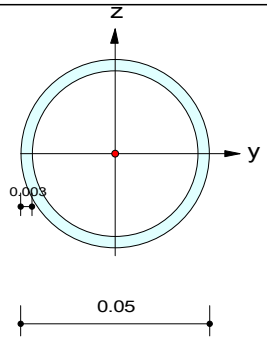


## 2. Member Forces

Axial Force Fxx = -7.2100 (LCB: 2, POS:1/2)
Bending Moments My = 0.00000, Mz = 0.00000
End Moments Myi = 0.00000, Myj = 0.00000 (for Lb)
Myi = 0.00000, Myj = 0.00000 (for Ly)
Mzi = 0.00000, Mzj = 0.00000 (for Lz)
Shear Forces Fyy = 0.00000 (LCB: 1, POS:1/2)
Fzz = 0.00000 (LCB: 1, POS:1/2)

| | | | |
|---|---|---|---|
| Outer Dia. | 0.05000 | Wall Thick | 0.00300 |
| Area | 0.00044 | Asz | 0.00022 |
| Qyb | 0.00055 | Qzb | 0.00055 |
| Iyy | 0.00000 | Izz | 0.00000 |
| Ybar | 0.02500 | Zbar | 0.02500 |
| Wely | 0.00000 | Welz | 0.00000 |
| ry | 0.01665 | rz | 0.01665 |

## 3. Design Parameters

Unbraced Lengths Ly = 1.26500, Lz = 1.26500, Lb = 1.26500
Effective Length Factors Ky = 1.00, Kz = 1.00
Equivalent Uniform Moment Factors Cmy = 1.00, Cmz = 1.00, CmLT = 1.00

## 4. Checking Results

Slenderness Ratio
KL/r = 76.0 < 200.0 (LCB: 2)..... O.K
Axial Resistance
N_Ed/MIN[Nc_Rd, Nb_Rd] = 7.2100/68.4832 = 0.105 < 1.000 ..... O.K
Bending Resistance
M_Edy/M_Rdy = 0.00000/1.23767 = 0.000 < 1.000 ..... O.K
M_Edz/M_Rdz = 0.00000/1.23767 = 0.000 < 1.000 ..... O.K
Combined Resistance
RNRd = MAX[ M_Edy/Mny_Rd, M_Edz/Mnz_Rd ]
Rcom = N_Ed/(A*fy/Gamma_M0), Rbend = M_Edy/My_Rd + M_Edz/Mz_Rd
Rc_LT1 = N_Ed/(Xiy*A*fy/Gamma_M1)
Rb_LT1 = (kyy*M_Edy)/(Xi_LT*Wply*fy/Gamma_M1) + (kyz*Msdz)/(Wplz*fy/Gamma_M1)
Rc_LT2 = N_Ed/(Xiz*A*fy/Gamma_M1)
Rb_LT2 = (Kzy*M_Edy)/(Xi_LT*Wply*fy/Gamma_M1) + (Kzz*Msdz)/(Wplz*fy/Gamma_M1)
Rmax = MAX[ RNRd, (Rcom+Rbend), MAX(Rc_LT1+Rb_LT1, Rc_LT2+Rb_LT2) ] = 0.105 < 1.000 .. O.K
Torsion Strength
T_Ed/T_Rd = 0.00000/1.05796 = 0.000 < 1.000 ..... O.K
Shear Resistance
V_Edy/Vy_Rd = 0.000 < 1.000 ..... O.K
V_Edz/Vz_Rd = 0.000 < 1.000 ..... O.K

# Steel Checking Result

| | | | |
|---|---|---|---|
| Company | | Project Title | |
| Author | dimore01 | File Name | C:\...\US1\atrio\reticolare.mgb |

## 1. Design Information

Design Code : Eurocode3:05
Unit System : kN, m
Member No : 443
Material : S235_LC2 (No:3)
(Fy = 195833, Es = 210000000)
Section Name : tubolare (No:2)
(Built-up Section).
Member Length : 9.95000

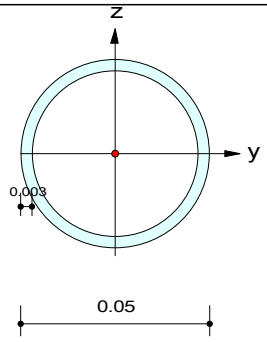


## 2. Member Forces

Axial Force Fxx = -8.9263 (LCB: 2, POS:1/2)
Bending Moments My = 0.00000, Mz = 0.00000
End Moments Myi = 0.00000, Myj = 0.00000 (for Lb)
Myi = 0.00000, Myj = 0.00000 (for Ly)
Mzi = 0.00000, Mzj = 0.00000 (for Lz)
Shear Forces Fyy = 0.00000 (LCB: 1, POS:1/2)
Fzz = 0.00000 (LCB: 1, POS:1/2)

| | | | |
|---|---|---|---|
| Outer Dia. | 0.05000 | Wall Thick | 0.00300 |
| Area | 0.00044 | Asz | 0.00022 |
| Qyb | 0.00055 | Qzb | 0.00055 |
| Iyy | 0.00000 | Izz | 0.00000 |
| Ybar | 0.02500 | Zbar | 0.02500 |
| Wely | 0.00000 | Welz | 0.00000 |
| ry | 0.01665 | rz | 0.01665 |

## 3. Design Parameters

Unbraced Lengths Ly = 1.26500, Lz = 1.26500, Lb = 1.26500
Effective Length Factors Ky = 1.00, Kz = 1.00
Equivalent Uniform Moment Factors Cmy = 1.00, Cmz = 1.00, CmLT = 1.00

## 4. Checking Results

Slenderness Ratio
KL/r = 76.0 < 200.0 (LCB: 2)..... O.K
Axial Resistance
N_Ed/MIN[Nc_Rd, Nb_Rd] = 8.9263/68.4832 = 0.130 < 1.000 ..... O.K
Bending Resistance
M_Edy/M_Rdy = 0.00000/1.23767 = 0.000 < 1.000 ..... O.K
M_Edz/M_Rdz = 0.00000/1.23767 = 0.000 < 1.000 ..... O.K
Combined Resistance
RNRd = MAX[ M_Edy/Mny_Rd, M_Edz/Mnz_Rd ]
Rcom = N_Ed/(A*fy/Gamma_M0), Rbend = M_Edy/My_Rd + M_Edz/Mz_Rd
Rc_LT1 = N_Ed/(Xiy*A*fy/Gamma_M1)
Rb_LT1 = (kyy*M_Edy)/(Xi_LT*Wply*fy/Gamma_M1) + (kyz*Msdz)/(Wplz*fy/Gamma_M1)
Rc_LT2 = N_Ed/(Xiz*A*fy/Gamma_M1)
Rb_LT2 = (Kzy*M_Edy)/(Xi_LT*Wply*fy/Gamma_M1) + (Kzz*Msdz)/(Wplz*fy/Gamma_M1)
Rmax = MAX[ RNRd, (Rcom+Rbend), MAX(Rc_LT1+Rb_LT1, Rc_LT2+Rb_LT2) ] = 0.130 < 1.000 .. O.K
Torsion Strength
T_Ed/T_Rd = 0.00000/1.05796 = 0.000 < 1.000 ..... O.K
Shear Resistance
V_Edy/Vy_Rd = 0.000 < 1.000 ..... O.K
V_Edz/Vz_Rd = 0.000 < 1.000 ..... O.K

# Steel Checking Result

| | | | |
|---|---|---|---|
| Company | | Project Title | |
| Author | dimore01 | File Name | C:\...\US1\atrio\reticolare.mgb |

## 1. Design Information

Design Code : Eurocode3:05
Unit System : kN, m
Member No : 410
Material : S235_LC2 (No:3)
(Fy = 195833, Es = 210000000)
Section Name : tubolare (No:2)
(Built-up Section).
Member Length : 9.95000

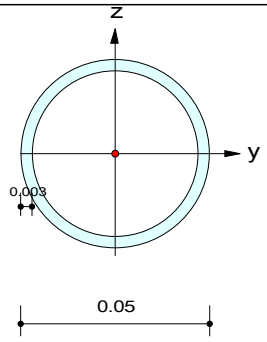


## 2. Member Forces

Axial Force Fxx = -7.2100 (LCB: 2, POS:1/2)
Bending Moments My = 0.00000, Mz = 0.00000
End Moments Myi = 0.00000, Myj = 0.00000 (for Lb)
Myi = 0.00000, Myj = 0.00000 (for Ly)
Mzi = 0.00000, Mzj = 0.00000 (for Lz)
Shear Forces Fyy = 0.00000 (LCB: 1, POS:1/2)
Fzz = 0.00000 (LCB: 1, POS:1/2)

| | | | |
|---|---|---|---|
| Outer Dia. | 0.05000 | Wall Thick | 0.00300 |
| Area | 0.00044 | Asz | 0.00022 |
| Qyb | 0.00055 | Qzb | 0.00055 |
| Iyy | 0.00000 | Izz | 0.00000 |
| Ybar | 0.02500 | Zbar | 0.02500 |
| Wely | 0.00000 | Welz | 0.00000 |
| ry | 0.01665 | rz | 0.01665 |

## 3. Design Parameters

Unbraced Lengths Ly = 1.26500, Lz = 1.26500, Lb = 1.26500
Effective Length Factors Ky = 1.00, Kz = 1.00
Equivalent Uniform Moment Factors Cmy = 1.00, Cmz = 1.00, CmLT = 1.00

## 4. Checking Results

Slenderness Ratio
KL/r = 76.0 < 200.0 (LCB: 2)..... O.K
Axial Resistance
N_Ed/MIN[Nc_Rd, Nb_Rd] = 7.2100/68.4832 = 0.105 < 1.000 ..... O.K
Bending Resistance
M_Edy/M_Rdy = 0.00000/1.23767 = 0.000 < 1.000 ..... O.K
M_Edz/M_Rdz = 0.00000/1.23767 = 0.000 < 1.000 ..... O.K
Combined Resistance
RNRd = MAX[ M_Edy/Mny_Rd, M_Edz/Mnz_Rd ]
Rcom = N_Ed/(A*fy/Gamma_M0), Rbend = M_Edy/My_Rd + M_Edz/Mz_Rd
Rc_LT1 = N_Ed/(Xiy*A*fy/Gamma_M1)
Rb_LT1 = (kyy*M_Edy)/(Xi_LT*Wply*fy/Gamma_M1) + (kyz*Msdz)/(Wplz*fy/Gamma_M1)
Rc_LT2 = N_Ed/(Xiz*A*fy/Gamma_M1)
Rb_LT2 = (Kzy*M_Edy)/(Xi_LT*Wply*fy/Gamma_M1) + (Kzz*Msdz)/(Wplz*fy/Gamma_M1)
Rmax = MAX[ RNRd, (Rcom+Rbend), MAX(Rc_LT1+Rb_LT1, Rc_LT2+Rb_LT2) ] = 0.105 < 1.000 .. O.K
Torsion Strength
T_Ed/T_Rd = 0.00000/1.05796 = 0.000 < 1.000 ..... O.K
Shear Resistance
V_Edy/Vy_Rd = 0.000 < 1.000 ..... O.K
V_Edz/Vz_Rd = 0.000 < 1.000 ..... O.K

# Steel Checking Result

| | | | |
|---|---|---|---|
| Company | | Project Title | |
| Author | dimore01 | File Name | C:\...\US1\atrio\reticolare.mgb |

## 1. Design Information

Design Code : Eurocode3:05
Unit System : kN, m
Member No : 377
Material : S235_LC2 (No:3)
(Fy = 195833, Es = 210000000)
Section Name : tubolare (No:2)
(Built-up Section).
Member Length : 9.95000

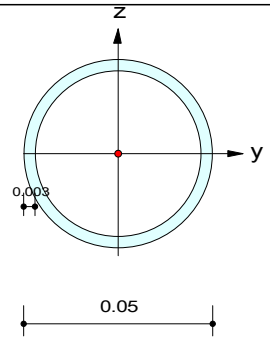


## 2. Member Forces

Axial Force Fxx = -8.6861 (LCB: 2, POS:1/2)
Bending Moments My = 0.00000, Mz = 0.00000
End Moments Myi = 0.00000, Myj = 0.00000 (for Lb)
Myi = 0.00000, Myj = 0.00000 (for Ly)
Mzi = 0.00000, Mzj = 0.00000 (for Lz)
Shear Forces Fyy = 0.00000 (LCB: 1, POS:1/2)
Fzz = 0.00000 (LCB: 1, POS:1/2)

| | | | |
|---|---|---|---|
| Outer Dia. | 0.05000 | Wall Thick | 0.00300 |
| Area | 0.00044 | Asz | 0.00022 |
| Qyb | 0.00055 | Qzb | 0.00055 |
| Iyy | 0.00000 | Izz | 0.00000 |
| Ybar | 0.02500 | Zbar | 0.02500 |
| Wely | 0.00000 | Welz | 0.00000 |
| ry | 0.01665 | rz | 0.01665 |

## 3. Design Parameters

Unbraced Lengths Ly = 1.26500, Lz = 1.26500, Lb = 1.26500
Effective Length Factors Ky = 1.00, Kz = 1.00
Equivalent Uniform Moment Factors Cmy = 1.00, Cmz = 1.00, CmLT = 1.00

## 4. Checking Results

Slenderness Ratio
KL/r = 76.0 < 200.0 (LCB: 2)..... O.K
Axial Resistance
N_Ed/MIN[Nc_Rd, Nb_Rd] = 8.6861/68.4832 = 0.127 < 1.000 ..... O.K
Bending Resistance
M_Edy/M_Rdy = 0.00000/1.23767 = 0.000 < 1.000 ..... O.K
M_Edz/M_Rdz = 0.00000/1.23767 = 0.000 < 1.000 ..... O.K
Combined Resistance
RNRd = MAX[ M_Edy/Mny_Rd, M_Edz/Mnz_Rd ]
Rcom = N_Ed/(A*fy/Gamma_M0), Rbend = M_Edy/My_Rd + M_Edz/Mz_Rd
Rc_LT1 = N_Ed/(Xiy*A*fy/Gamma_M1)
Rb_LT1 = (kyy*M_Edy)/(Xi_LT*Wply*fy/Gamma_M1) + (kyz*Msdz)/(Wplz*fy/Gamma_M1)
Rc_LT2 = N_Ed/(Xiz*A*fy/Gamma_M1)
Rb_LT2 = (Kzy*M_Edy)/(Xi_LT*Wply*fy/Gamma_M1) + (Kzz*Msdz)/(Wplz*fy/Gamma_M1)
Rmax = MAX[ RNRd, (Rcom+Rbend), MAX(Rc_LT1+Rb_LT1, Rc_LT2+Rb_LT2) ] = 0.127 < 1.000 .. O.K
Torsion Strength
T_Ed/T_Rd = 0.00000/1.05796 = 0.000 < 1.000 ..... O.K
Shear Resistance
V_Edy/Vy_Rd = 0.000 < 1.000 ..... O.K
V_Edz/Vz_Rd = 0.000 < 1.000 ..... O.K

| | | | |
|---|---|---|---|
| Impresa: | | Pagina: | 1 |
| Progettista: | | Progetto: | |
| Indirizzo: | | Contratto N°: | |
| Telefono I Fax: | \| | Data: | 08/06/2020 |
| E-mail: | | | |

**Commenti del progettista:**

## 1 Dati da inserire

| | |
|---|---|
| **Tipo e dimensione dell'ancorante:** | **HIT-RE 500 V3 + HIT-V-F (8.8) M20** |
| Return period (service life in years): | 50 |
| Profondità di posa effettiva: | $h_{ef,act}$ = 200 mm ($h_{ef,limit}$ = - mm) |
| Materiale: | 8.8 |
| Certificazione No.: | ETA 16/0143 |
| Emesso I Valido: | 14/05/2019 \| - |
| Prova: | metodo di calcolo EN 1992-4, Chimico |
| Fissaggio distanziato: | $e_b$ = 0 mm (Senza distanziamento); t = 18 mm |
| Piastra d'ancoraggio: | $l_x$ x $l_y$ x t = 250 mm x 250 mm x 18 mm; (Spessore della piastra raccomandato: non calcolato |
| Profilo: | nessun profilo |
| Materiale base: | fessurato calcestruzzo, C20/25, $f_{c,cyl}$ = 20.00 N/mm$^2$; h = 350 mm, Temp. Breve/Lungo: 0/0 °C |
| **Installazione:** | **Foro eseguito con perforatore, Condizioni di installazione: asciutto** |
| Armatura: | nessuna armatura o interasse tra le armature >= 150 mm (qualunque Ø) o >= 100 mm (Ø <= 10 mm) senza armatura di bordo longitudinale |

[R] - Il calcolo dell'ancoraggio presuppone la presenza di una piastra di ancoraggio rigida.

**Geometria [mm] & Carichi [kN, kNm]**

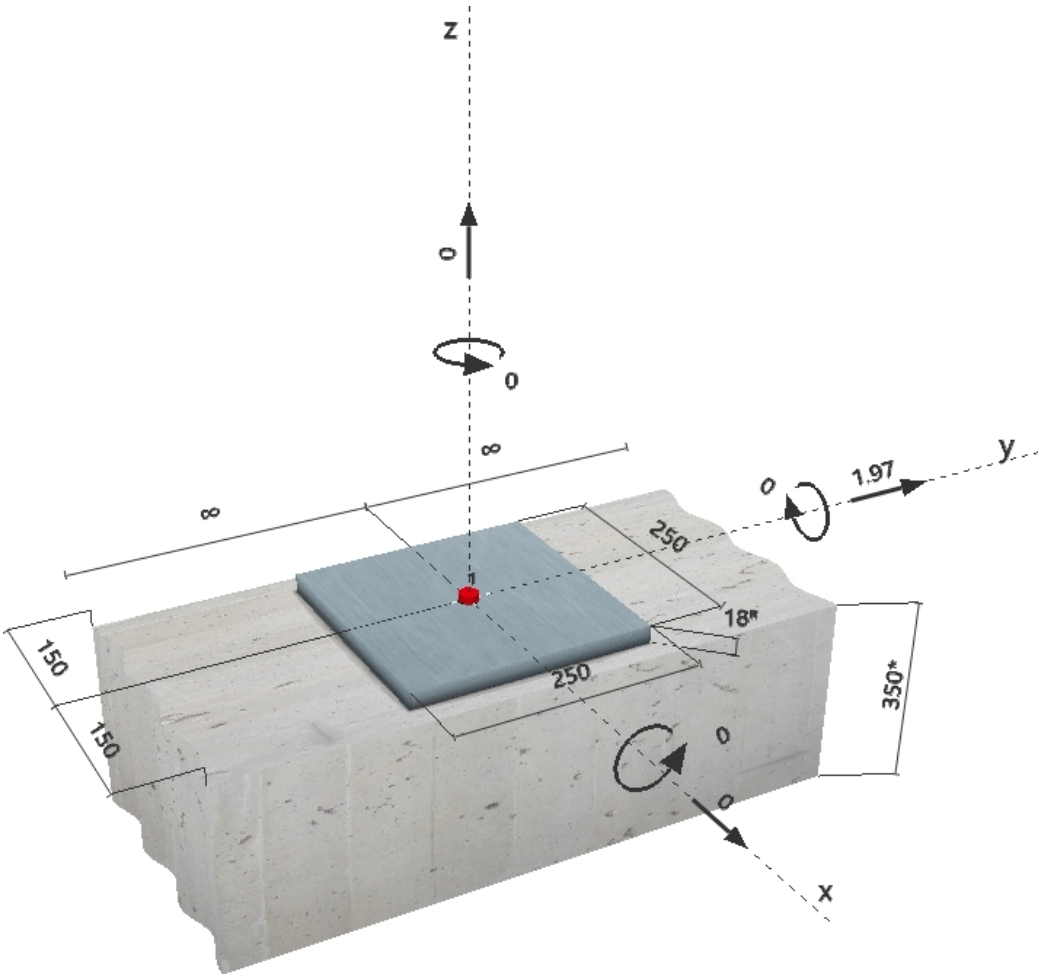



PROFIS Anchor ( c ) 2003-2009 Hilti AG, FL-9494 Schaan Hilti è un marchio registrato di Hilti AG, Schaan

| | | | |
|---|---|---|---|
| Impresa: | | Pagina: | 2 |
| Progettista: | | Progetto: | |
| Indirizzo: | | Contratto N°: | |
| Telefono I Fax: | \| | Data: | 08/06/2020 |
| E-mail: | | | |

### 1.1 Carichi permamenti

| $N_{sus}$ [kN] | $M_{x,sus}$ [kNm] | $M_{y,sus}$ [kNm] |
|---|---|---|
| 0.000 | 0.000 | 0.000 |

## 2 Condizione di carico/Carichi risultanti sull'ancorante (ULS)

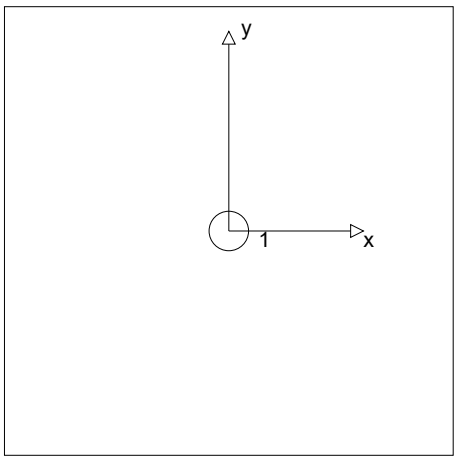


Condizione di carico: Carichi di progetto

**Carichi sull'ancorante [kN]**
Trazione: (+ Trazione, - Compressione)

| Ancorante | Trazione | Taglio | Taglio in dir. x | Taglio in dir. y |
|---|---|---|---|---|
| 1 | 0.000 | 1.970 | 0.000 | 1.970 |

Compressione max. nel calcestruzzo: - [‰]
Max. sforzo di compressione nel calcestruzzo: - [N/mm$^2$]
risultante delle forze di trazione nel (x/y)=(0/0): 0.000 [kN]
risultante delle forze di compressione (x/y)=(0/0): 0.000 [kN]

Le forze di ancoraggio vengono calcolate presupponendo una piastra di ancoraggio rigida.


PROFIS Anchor ( c ) 2003-2009 Hilti AG, FL-9494 Schaan Hilti è un marchio registrato di Hilti AG, Schaan

| | | | |
|---|---|---|---|
| Impresa: | | Pagina: | 3 |
| Progettista: | | Progetto: | |
| Indirizzo: | | Contratto N°: | |
| Telefono I Fax: | \| | Data: | 08/06/2020 |
| E-mail: | | | |

## 3 Carico di trazione (EN 1992-4, Sezione 7.2.1)

| | Carico [kN] | Resistenza [kN] | Utilizzo $\beta_N$ [%] | Stato |
|---|---|---|---|---|
| Rottura dell'acciaio* | N/A | N/A | N/A | N/A |
| Rottura combinata conica del calcestruzzo e per sfilamento** | N/A | N/A | N/A | N/A |
| Rottura conica del calcestruzzo** | N/A | N/A | N/A | N/A |
| Fessurazione** | N/A | N/A | N/A | N/A |

*ancorante più sollecitato **gruppo di ancoranti (ancoranti sollecitati)


PROFIS Anchor ( c ) 2003-2009 Hilti AG, FL-9494 Schaan Hilti è un marchio registrato di Hilti AG, Schaan

| | | | |
|---|---|---|---|
| Impresa: | | Pagina: | 4 |
| Progettista: | | Progetto: | |
| Indirizzo: | | Contratto N°: | |
| Telefono I Fax: | \| | Data: | 08/06/2020 |
| E-mail: | | | |

## 4 Carico di taglio (EN 1992-4, Sezione 7.2.2)

| | Carico [kN] | Resistenza [kN] | Utilizzo $\beta_V$ [%] | Stato |
|---|---|---|---|---|
| Rottura dell'acciaio (senza braccio di leva)* | 1.970 | 78.400 | 3 | OK |
| Rottura dell'acciaio (con braccio di leva)* | N/A | N/A | N/A | N/A |
| Rottura per pryout** | 1.970 | 55.192 | 4 | OK |
| Rottura del bordo del calcestruzzo in direzione x+** | 1.970 | 37.502 | 6 | OK |

*ancorante più sollecitato **gruppo di ancoranti (ancoranti specifici)

### 4.1 Rottura dell'acciaio (senza braccio di leva)

| $V^0_{Rk,s}$ [kN] | $k_7$ | $V_{Rk,s}$ [kN] | $\gamma_{M,s}$ | $V_{Rd,s}$ [kN] | $V_{Ed}$ [kN] |
|---|---|---|---|---|---|
| 98.000 | 1.000 | 98.000 | 1.250 | 78.400 | 1.970 |

### 4.2 Rottura per pryout (cono del calcestruzzo)

| $A_{c,N}$ [mm²] | $A^0_{c,N}$ [mm²] | $c_{cr,N}$ [mm] | $s_{cr,N}$ [mm] | $f_{c,cyl}$ [N/mm²] | $k_8$ |
|---|---|---|---|---|---|
| 180 000 | 360 000 | 300 | 600 | 20.00 | 2.000 |

| $e_{c1,V}$ [mm] | $\psi_{ec1,N}$ | $e_{c2,V}$ [mm] | $\psi_{ec2,N}$ | $\psi_{s,N}$ | $\psi_{re,N}$ | $\psi_{M,N}$ |
|---|---|---|---|---|---|---|
| 0 | 1.000 | 0 | 1.000 | 0.850 | 1.000 | 1.000 |

| $k_1$ | $N^0_{Rk,c}$ [kN] | $\gamma_{M,c,p}$ | $V_{Rd,cp}$ [kN] | $V_{Ed}$ [kN] |
|---|---|---|---|---|
| 7.700 | 97.398 | 1.500 | 55.192 | 1.970 |

### 4.3 Rottura del bordo del calcestruzzo in direzione x+

| $l_f$ [mm] | $d_{nom}$ [mm] | $k_9$ | $\alpha$ | $\beta$ | $f_{c,cyl}$ [N/mm²] |
|---|---|---|---|---|---|
| 200 | 20.0 | 1.700 | 0.115 | 0.067 | 20.00 |

| $c_1$ [mm] | $A_{c,V}$ [mm²] | $A^0_{c,V}$ [mm²] |
|---|---|---|
| 150 | 101 250 | 101 250 |

| $\psi_{s,V}$ | $\psi_{h,V}$ | $\psi_{\alpha,V}$ | $e_{c,V}$ [mm] | $\psi_{ec,V}$ | $\psi_{re,V}$ |
|---|---|---|---|---|---|
| 1.000 | 1.000 | 2.000 | 0 | 1.000 | 1.000 |

| $V^0_{Rk,c}$ [kN] | $k_T$ | $\gamma_{M,c}$ | $V_{Rd,c}$ [kN] | $V_{Ed}$ [kN] |
|---|---|---|---|---|
| 28.126 | 1.0 | 1.500 | 37.502 | 1.970 |

## 5 Spostamenti (ancorante più sollecitato)

Carichi a breve termine:

$N_{Sk}$ = 0.000 [kN] $\delta_N$ = 0.000 [mm]

$V_{Sk}$ = 1.459 [kN] $\delta_V$ = 0.058 [mm]

$\delta_{NV}$ = 0.058 [mm]

Carichi a lungo termine:

$N_{Sk}$ = 0.000 [kN] $\delta_N$ = 0.000 [mm]

$V_{Sk}$ = 1.459 [kN] $\delta_V$ = 0.088 [mm]

$\delta_{NV}$ = 0.088 [mm]

Commenti: Gli spostamenti a trazione risultano validi con metà del valore della coppia di serraggio richiesta per non fessurato calcestruzzo! Gli spostamenti a taglio sono validi trascurando l'attrito tra il calcestruzzo e la piastra d'ancoraggio! Lo spazio derivante dal foro eseguito con perforatore e dalle tolleranze dei fori non viene considerato in questo calcolo!

Gli spostamenti ammissibili dell'ancorante dipendono dalla struttura fissata e devono essere definiti dal progettista!


PROFIS Anchor ( c ) 2003-2009 Hilti AG, FL-9494 Schaan Hilti è un marchio registrato di Hilti AG, Schaan

| | | | |
|---|---|---|---|
| Impresa: | | Pagina: | 5 |
| Progettista: | | Progetto: | |
| Indirizzo: | | Contratto N°: | |
| Telefono I Fax: | \| | Data: | 08/06/2020 |
| E-mail: | | | |

## 6 Attenzione

- Fenomeni di ridistribuzione dei carichi sugli ancoranti derivanti da eventuali deformazioni elastiche della piastra non sono presi in considerazione. Si assume una piastra di ancoraggio sufficientemente rigida in modo che non risulti deformabile sotto l'azione di carichi!
- La verifica del trasferimento dei carichi all'interno del materiale di base è richiesta in accordo con EN 1992-4, Allegato A!
- Il progetto è valido solo se le dimensioni del foro nell'elemento da fissare non è maggiore del valore dato in tabella 6.1 di EN 1992-4! Per diametri maggiori del foro vedere sezione 6.2.2 di EN 1992-4!
- La lista accessori inclusa in questo report di calcolo è da ritenersi solo come informativa dell'utente. In ogni caso, le istruzioni d'uso fornite con il prodotto dovranno essere rispettate per garantire una corretta installazione.
- Per la determinazione di Psi_re,v (rottura di bordo del calcestruzzo) si assume un copriferro per le armature di bordo c = 30 mm
- L'adesione chimica caratteristica dipende dalle temperature di breve e di lungo periodo.
- Contattare Hilti per verificare la fornitura delle barre HIT-V.
- L'armatura di bordo non è necessaria per evitare la modalità di rottura per fessurazione (splitting)
- The characteristic bond resistances depend on the return period (service life in years): 50

# L'ancoraggio risulta verificato!


PROFIS Anchor ( c ) 2003-2009 Hilti AG, FL-9494 Schaan Hilti è un marchio registrato di Hilti AG, Schaan

| | | | |
|---|---|---|---|
| Impresa: | | Pagina: | 6 |
| Progettista: | | Progetto: | |
| Indirizzo: | | Contratto N°: | |
| Telefono I Fax: | \| | Data: | 08/06/2020 |
| E-mail: | | | |

# 7 Dati relativi all'installazione

Piastra d'ancoraggio, acciaio: -
Profilo: nessun profilo
Diametro del foro nella piastra: $d_f$ = 22 mm
Spessore della piastra (input): 18 mm
Spessore della piastra raccomandato: non calcolato
Metodo di perforazione: Foro con perforazione a roto-percussione
Pulizia: E' necessaria una pulizia accurata del foro (Premium cleaning)

Tipo e dimensione dell'ancorante: HIT-RE 500 V3 + HIT-V-F (8.8) M20
Coppia di serraggio: 0.150 kNm
Diametro del foro nel materiale base: 22 mm
Profondità del foro nel materiale base: 200 mm
Spessore minimo del materiale base: 244 mm

## 7.1 Accessori richiesti

| Perforazione | Pulizia | Posa |
|---|---|---|
| • Idoneo per rotopercussione<br>• Dimensione appropriata della punta del trapano | • Aria compressa con i relativi accessori necessari per soffiare a partire dal fondo del foro.<br>• Diametro appropriato dello scovolino | • Il dispenser include il portacartucce e il miscelatore<br>• Chiave dinamometrica |

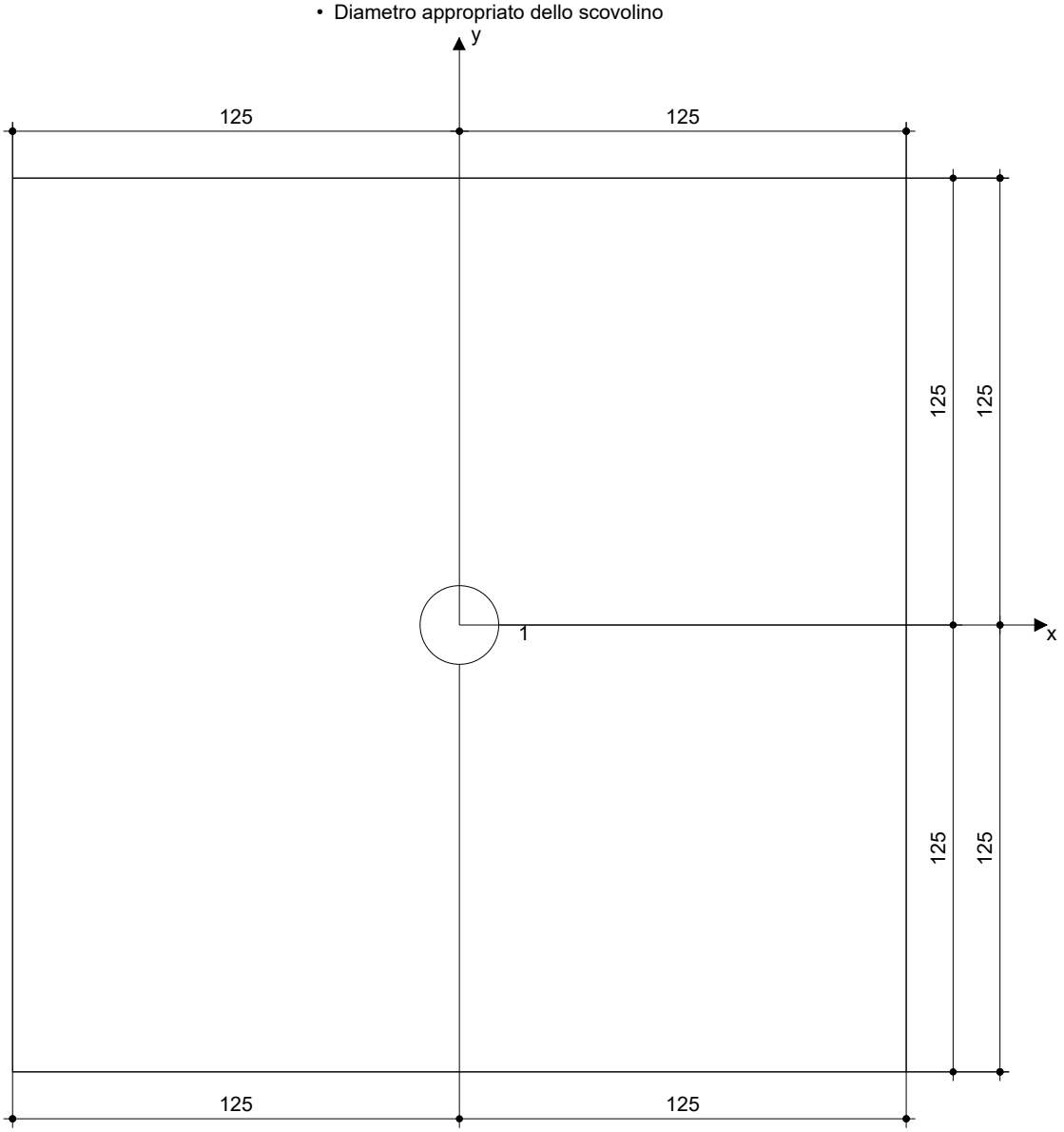


**Coordinate dell'ancorante [mm]**

| Ancorante | x | y | $c_{-x}$ | $c_{+x}$ | $c_{-y}$ | $c_{+y}$ |
|---|---|---|---|---|---|---|
| 1 | 0 | 0 | 150 | 150 | - | - |


PROFIS Anchor ( c ) 2003-2009 Hilti AG, FL-9494 Schaan Hilti è un marchio registrato di Hilti AG, Schaan

| | | | |
|---|---|---|---|
| Impresa: | | Pagina: | 7 |
| Progettista: | | Progetto: | |
| Indirizzo: | | Contratto N°: | |
| Telefono I Fax: | \| | Data: | 08/06/2020 |
| E-mail: | | | |

## 8 Osservazioni; doveri del cliente

- Tutte le informazioni e i dati contenuti nel Software riguardano solamente l'uso di prodotti Hilti e si basano su principi, formule e norme di sicurezza in conformità con le indicazioni tecniche, di funzionamento, montaggio e assemblaggio, ecc. della Hilti che devono essere rigorosamente rispettate da parte dell'utente. Tutt i valori in esso contenuti sono valori medi, quindi vanno effettuati test specifici prima di utilizzare il prodotto Hilti in questione. I risultati dei calcoli effettuati mediante il software si basano essenzialmente sui dati che l'utente ha inserito. Di conseguenza l'utente è l'unico responsabile per l'assenza di errori, la completezza e la pertinenza dei dati che vanno immessi. Inoltre, l'utente ha la responsabilità di far controllare e correggere i risultati dei calcoli da parte di un esperto, con particolare riguardo al rispetto di norme e autorizzazioni, prima di utilizzarli per uno scopo specifico. Il software serve solo come un compendio per interpretare le norme e i permessi, senza alcuna garanzia circa l'assenza di errori, la correttezza e la pertinenza dei risultati o di idoneità per una specifica applicazione.
- L'utente deve applicare tutti gli accorgimenti necessari e ragionevoli per prevenire o limitare i danni causati dal software. In particolare, l'utente deve organizzare un backup periodico dei programmi e dei dati e, se necessario, effettuare gli aggiornamenti del software offerti da Hilti in maniera regolare. Se non si utilizza la funzione di aggiornamento automatico del software, l'utente deve assicurarsi di utilizzare l'ultima versione e quindi di mantenere aggiornato il Software effettuando aggiornamenti manuali dal sito web Hilti. Hilti non è responsabile per le conseguenze derivanti da una violazione colposa di responsabilità da parte dell'utente, come il recupero di dati o programmi persi o danneggiati.


PROFIS Anchor ( c ) 2003-2009 Hilti AG, FL-9494 Schaan  Hilti è un marchio registrato di Hilti AG, Schaan

| | | | |
|---|---|---|---|
| Impresa: | | Pagina: | 1 |
| Progettista: | | Progetto: | |
| Indirizzo: | | Contratto N°: | |
| Telefono I Fax: | \| | Data: | 08/06/2020 |
| E-mail: | | | |

**Commenti del progettista:**

## 1 Dati da inserire

| | |
|---|---|
| **Tipo e dimensione dell'ancorante:** | **HIT-RE 500 V3 + HIT-V-F (8.8) M20** |
| Return period (service life in years): | 50 |
| Profondità di posa effettiva: | $h_{ef,act}$ = 200 mm ($h_{ef,limit}$ = - mm) |
| Materiale: | 8.8 |
| Certificazione No.: | ETA 16/0143 |
| Emesso I Valido: | 14/05/2019 \| - |
| Prova: | metodo di calcolo EN 1992-4, Chimico |
| Fissaggio distanziato: | $e_b$ = 0 mm (Senza distanziamento); t = 10 mm |
| Piastra d'ancoraggio: | $l_x$ x $l_y$ x t = 160 mm x 200 mm x 10 mm; (Spessore della piastra raccomandato: non calcolato |
| Profilo: | nessun profilo |
| Materiale base: | fessurato calcestruzzo, C20/25, $f_{c,cyl}$ = 20.00 N/mm$^2$; h = 333 mm, Temp. Breve/Lungo: 0/0 °C |
| **Installazione:** | **Foro eseguito con perforatore, Condizioni di installazione: asciutto** |
| Armatura: | nessuna armatura o interasse tra le armature >= 150 mm (qualunque Ø) o >= 100 mm (Ø <= 10 mm) senza armatura di bordo longitudinale |

[R] - Il calcolo dell'ancoraggio presuppone la presenza di una piastra di ancoraggio rigida.

**Geometria [mm] & Carichi [kN, kNm]**

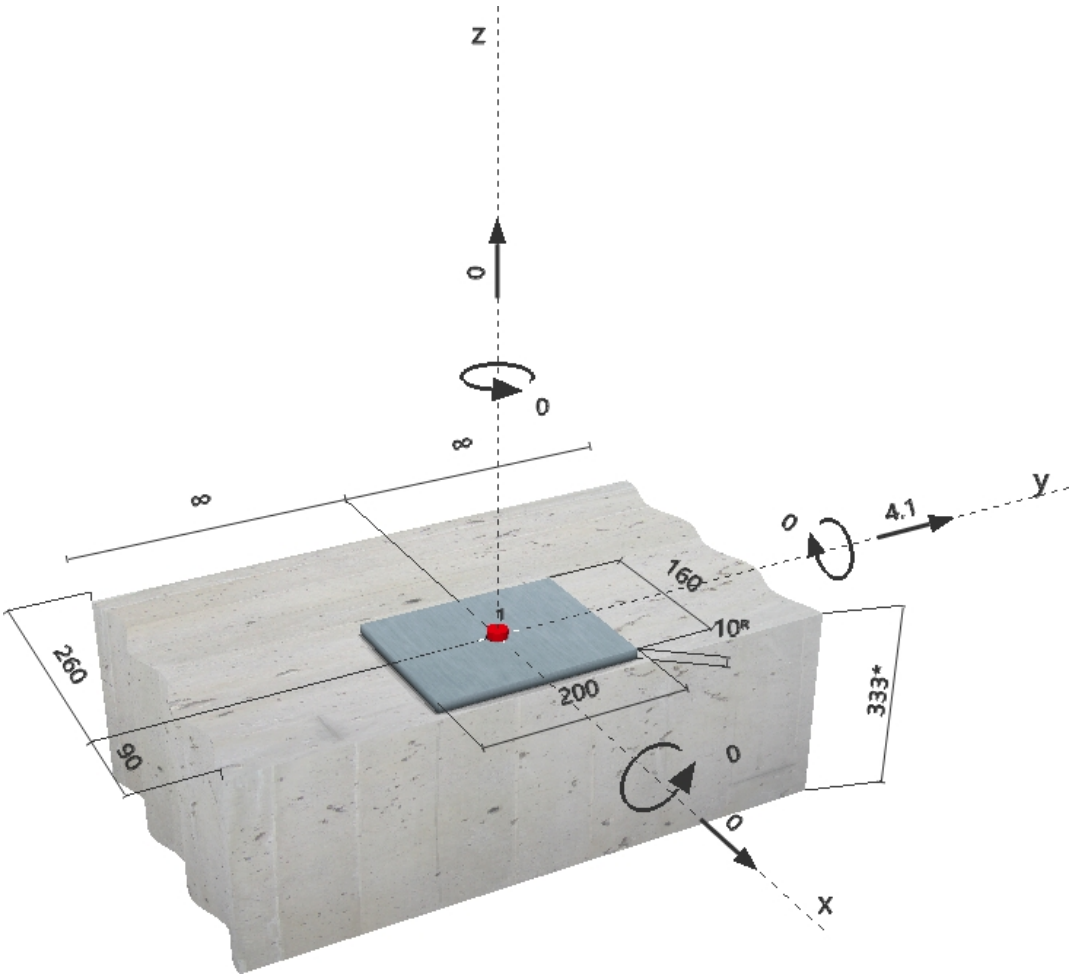



PROFIS Anchor ( c ) 2003-2009 Hilti AG, FL-9494 Schaan Hilti è un marchio registrato di Hilti AG, Schaan

| | | | |
|---|---|---|---|
| Impresa: | | Pagina: | 2 |
| Progettista: | | Progetto: | |
| Indirizzo: | | Contratto N°: | |
| Telefono I Fax: | \| | Data: | 08/06/2020 |
| E-mail: | | | |

### 1.1 Carichi permamenti

| $N_{sus}$ [kN] | $M_{x,sus}$ [kNm] | $M_{y,sus}$ [kNm] |
|---|---|---|
| 0.000 | 0.000 | 0.000 |

## 2 Condizione di carico/Carichi risultanti sull'ancorante (ULS)

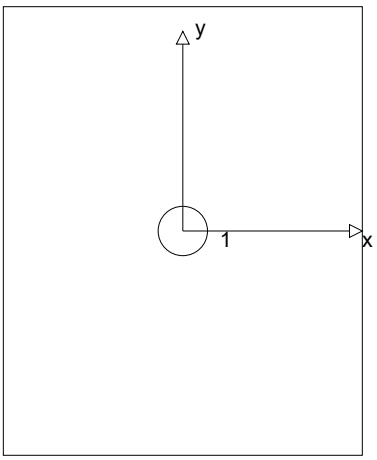


Condizione di carico: Carichi di progetto

**Carichi sull'ancorante [kN]**
Trazione: (+ Trazione, - Compressione)

| Ancorante | Trazione | Taglio | Taglio in dir. x | Taglio in dir. y |
|---|---|---|---|---|
| 1 | 0.000 | 4.100 | 0.000 | 4.100 |

Compressione max. nel calcestruzzo: - [‰]
Max. sforzo di compressione nel calcestruzzo: - [N/mm$^2$]
risultante delle forze di trazione nel (x/y)=(0/0): 0.000 [kN]
risultante delle forze di compressione (x/y)=(0/0): 0.000 [kN]

Le forze di ancoraggio vengono calcolate presupponendo una piastra di ancoraggio rigida.


PROFIS Anchor ( c ) 2003-2009 Hilti AG, FL-9494 Schaan Hilti è un marchio registrato di Hilti AG, Schaan

| | | | |
|---|---|---|---|
| Impresa: | | Pagina: | 3 |
| Progettista: | | Progetto: | |
| Indirizzo: | | Contratto N°: | |
| Telefono I Fax: | \| | Data: | 08/06/2020 |
| E-mail: | | | |

## 3 Carico di trazione (EN 1992-4, Sezione 7.2.1)

| | Carico [kN] | Resistenza [kN] | Utilizzo $\beta_N$ [%] | Stato |
|---|---|---|---|---|
| Rottura dell'acciaio* | N/A | N/A | N/A | N/A |
| Rottura combinata conica del calcestruzzo e per sfilamento** | N/A | N/A | N/A | N/A |
| Rottura conica del calcestruzzo** | N/A | N/A | N/A | N/A |
| Fessurazione** | N/A | N/A | N/A | N/A |

*ancorante più sollecitato **gruppo di ancoranti (ancoranti sollecitati)


PROFIS Anchor ( c ) 2003-2009 Hilti AG, FL-9494 Schaan Hilti è un marchio registrato di Hilti AG, Schaan

| | | | |
|---|---|---|---|
| Impresa: | | Pagina: | 4 |
| Progettista: | | Progetto: | |
| Indirizzo: | | Contratto N°: | |
| Telefono I Fax: | \| | Data: | 08/06/2020 |
| E-mail: | | | |

## 4 Carico di taglio (EN 1992-4, Sezione 7.2.2)

| | Carico [kN] | Resistenza [kN] | Utilizzo $\beta_V$ [%] | Stato |
|---|---|---|---|---|
| Rottura dell'acciaio (senza braccio di leva)* | 4.100 | 78.400 | 6 | OK |
| Rottura dell'acciaio (con braccio di leva)* | N/A | N/A | N/A | N/A |
| Rottura per pryout** | 4.100 | 59.846 | 7 | OK |
| Rottura del bordo del calcestruzzo in direzione x+** | 4.100 | 20.023 | 21 | OK |

*ancorante più sollecitato **gruppo di ancoranti (ancoranti specifici)

### 4.1 Rottura dell'acciaio (senza braccio di leva)

| $V^0_{Rk,s}$ [kN] | $k_7$ | $V_{Rk,s}$ [kN] | $\gamma_{M,s}$ | $V_{Rd,s}$ [kN] | $V_{Ed}$ [kN] |
|---|---|---|---|---|---|
| 98.000 | 1.000 | 98.000 | 1.250 | 78.400 | 4.100 |

### 4.2 Rottura per pryout (cono del calcestruzzo)

| $A_{c,N}$ [mm²] | $A^0_{c,N}$ [mm²] | $c_{cr,N}$ [mm] | $s_{cr,N}$ [mm] | $f_{c,cyl}$ [N/mm²] | $k_8$ |
|---|---|---|---|---|---|
| 210 000 | 360 000 | 300 | 600 | 20.00 | 2.000 |

| $e_{c1,V}$ [mm] | $\psi_{ec1,N}$ | $e_{c2,V}$ [mm] | $\psi_{ec2,N}$ | $\psi_{s,N}$ | $\psi_{re,N}$ | $\psi_{M,N}$ |
|---|---|---|---|---|---|---|
| 0 | 1.000 | 0 | 1.000 | 0.790 | 1.000 | 1.000 |

| $k_1$ | $N^0_{Rk,c}$ [kN] | $\gamma_{M,c,p}$ | $V_{Rd,cp}$ [kN] | $V_{Ed}$ [kN] |
|---|---|---|---|---|
| 7.700 | 97.398 | 1.500 | 59.846 | 4.100 |

### 4.3 Rottura del bordo del calcestruzzo in direzione x+

| $l_f$ [mm] | $d_{nom}$ [mm] | $k_9$ | $\alpha$ | $\beta$ | $f_{c,cyl}$ [N/mm²] |
|---|---|---|---|---|---|
| 200 | 20.0 | 1.700 | 0.149 | 0.074 | 20.00 |

| $c_1$ [mm] | $A_{c,V}$ [mm²] | $A^0_{c,V}$ [mm²] |
|---|---|---|
| 90 | 36 450 | 36 450 |

| $\psi_{s,V}$ | $\psi_{h,V}$ | $\psi_{\alpha,V}$ | $e_{c,V}$ [mm] | $\psi_{ec,V}$ | $\psi_{re,V}$ |
|---|---|---|---|---|---|
| 1.000 | 1.000 | 2.000 | 0 | 1.000 | 1.000 |

| $V^0_{Rk,c}$ [kN] | $k_T$ | $\gamma_{M,c}$ | $V_{Rd,c}$ [kN] | $V_{Ed}$ [kN] |
|---|---|---|---|---|
| 15.018 | 1.0 | 1.500 | 20.023 | 4.100 |

## 5 Spostamenti (ancorante più sollecitato)

Carichi a breve termine:

$N_{Sk}$ = 0.000 [kN] $\delta_N$ = 0.000 [mm]

$V_{Sk}$ = 3.037 [kN] $\delta_V$ = 0.121 [mm]

$\delta_{NV}$ = 0.121 [mm]

Carichi a lungo termine:

$N_{Sk}$ = 0.000 [kN] $\delta_N$ = 0.000 [mm]

$V_{Sk}$ = 3.037 [kN] $\delta_V$ = 0.182 [mm]

$\delta_{NV}$ = 0.182 [mm]

Commenti: Gli spostamenti a trazione risultano validi con metà del valore della coppia di serraggio richiesta per non fessurato calcestruzzo! Gli spostamenti a taglio sono validi trascurando l'attrito tra il calcestruzzo e la piastra d'ancoraggio! Lo spazio derivante dal foro eseguito con perforatore e dalle tolleranze dei fori non viene considerato in questo calcolo!

Gli spostamenti ammissibili dell'ancorante dipendono dalla struttura fissata e devono essere definiti dal progettista!


PROFIS Anchor ( c ) 2003-2009 Hilti AG, FL-9494 Schaan Hilti è un marchio registrato di Hilti AG, Schaan

| | | | |
|---|---|---|---|
| Impresa: | | Pagina: | 5 |
| Progettista: | | Progetto: | |
| Indirizzo: | | Contratto N°: | |
| Telefono I Fax: | \| | Data: | 08/06/2020 |
| E-mail: | | | |

## 6 Attenzione

- Fenomeni di ridistribuzione dei carichi sugli ancoranti derivanti da eventuali deformazioni elastiche della piastra non sono presi in considerazione. Si assume una piastra di ancoraggio sufficientemente rigida in modo che non risulti deformabile sotto l'azione di carichi!
- La verifica del trasferimento dei carichi all'interno del materiale di base è richiesta in accordo con EN 1992-4, Allegato A!
- Il progetto è valido solo se le dimensioni del foro nell'elemento da fissare non è maggiore del valore dato in tabella 6.1 di EN 1992-4! Per diametri maggiori del foro vedere sezione 6.2.2 di EN 1992-4!
- La lista accessori inclusa in questo report di calcolo è da ritenersi solo come informativa dell'utente. In ogni caso, le istruzioni d'uso fornite con il prodotto dovranno essere rispettate per garantire una corretta installazione.
- Per la determinazione di Psi_re,v (rottura di bordo del calcestruzzo) si assume un copriferro per le armature di bordo c = 30 mm
- L'adesione chimica caratteristica dipende dalle temperature di breve e di lungo periodo.
- Contattare Hilti per verificare la fornitura delle barre HIT-V.
- L'armatura di bordo non è necessaria per evitare la modalità di rottura per fessurazione (splitting)
- The characteristic bond resistances depend on the return period (service life in years): 50

# L'ancoraggio risulta verificato!


PROFIS Anchor ( c ) 2003-2009 Hilti AG, FL-9494 Schaan Hilti è un marchio registrato di Hilti AG, Schaan

| | | | |
|---|---|---|---|
| Impresa: | | Pagina: | 6 |
| Progettista: | | Progetto: | |
| Indirizzo: | | Contratto N°: | |
| Telefono I Fax: | \| | Data: | 08/06/2020 |
| E-mail: | | | |

# 7 Dati relativi all'installazione

Piastra d'ancoraggio, acciaio: -
Profilo: nessun profilo
Diametro del foro nella piastra: $d_f$ = 22 mm
Spessore della piastra (input): 10 mm
Spessore della piastra raccomandato: non calcolato
Metodo di perforazione: Foro con perforazione a roto-percussione
Pulizia: E' necessaria una pulizia accurata del foro (Premium cleaning)

Tipo e dimensione dell'ancorante: HIT-RE 500 V3 + HIT-V-F (8.8) M20
Coppia di serraggio: 0.150 kNm
Diametro del foro nel materiale base: 22 mm
Profondità del foro nel materiale base: 200 mm
Spessore minimo del materiale base: 244 mm

## 7.1 Accessori richiesti

| Perforazione | Pulizia | Posa |
|---|---|---|
| • Idoneo per rotopercussione<br>• Dimensione appropriata della punta del trapano | • Aria compressa con i relativi accessori necessari per soffiare a partire dal fondo del foro.<br>• Diametro appropriato dello scovolino | • Il dispenser include il portacartucce e il miscelatore<br>• Chiave dinamometrica |

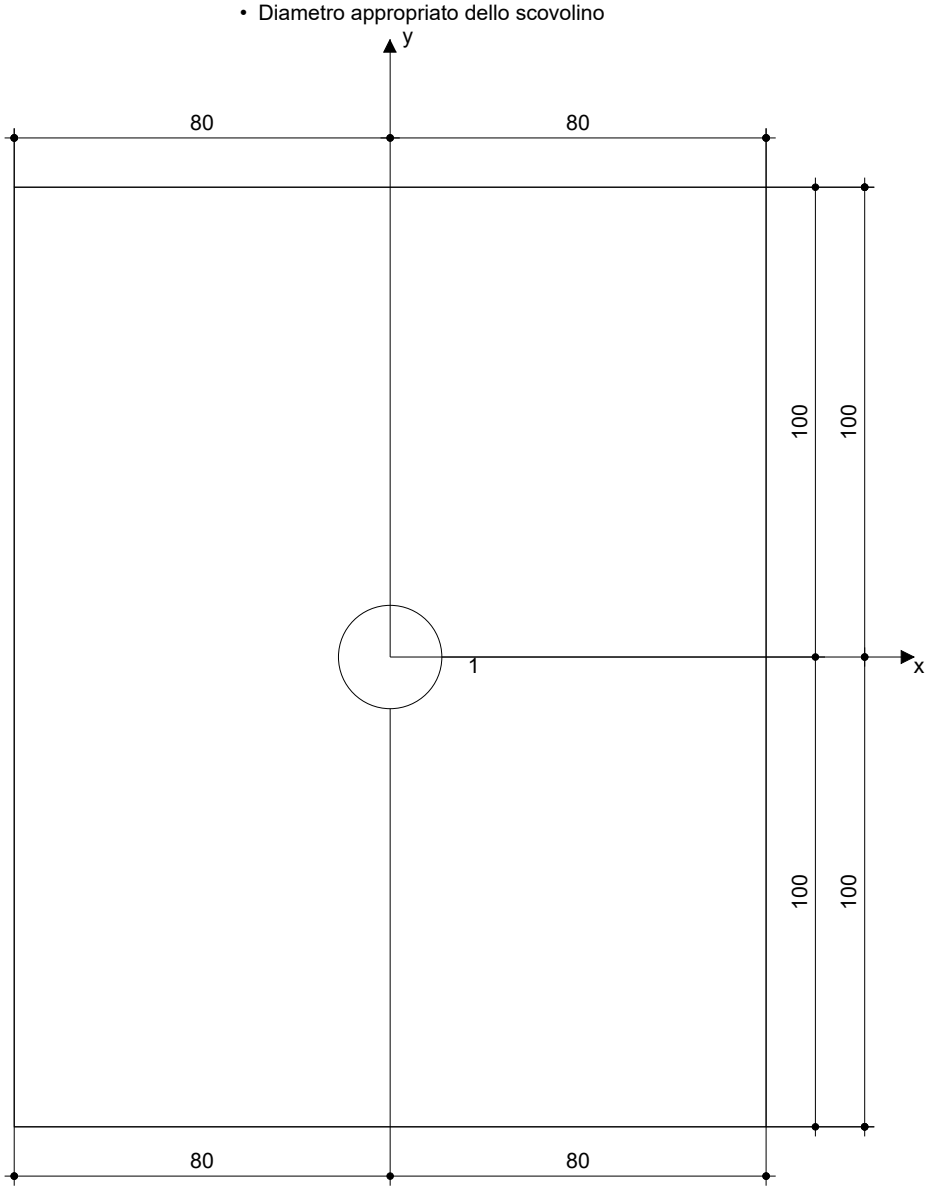


**Coordinate dell'ancorante [mm]**

| Ancorante | x | y | $c_{-x}$ | $c_{+x}$ | $c_{-y}$ | $c_{+y}$ |
|---|---|---|---|---|---|---|
| 1 | 0 | 0 | 260 | 90 | - | - |


PROFIS Anchor ( c ) 2003-2009 Hilti AG, FL-9494 Schaan Hilti è un marchio registrato di Hilti AG, Schaan

| | | | |
|---|---|---|---|
| Impresa: | | Pagina: | 7 |
| Progettista: | | Progetto: | |
| Indirizzo: | | Contratto N°: | |
| Telefono I Fax: | \| | Data: | 08/06/2020 |
| E-mail: | | | |

## 8 Osservazioni; doveri del cliente

- Tutte le informazioni e i dati contenuti nel Software riguardano solamente l'uso di prodotti Hilti e si basano su principi, formule e norme di sicurezza in conformità con le indicazioni tecniche, di funzionamento, montaggio e assemblaggio, ecc. della Hilti che devono essere rigorosamente rispettate da parte dell'utente. Tutt i valori in esso contenuti sono valori medi, quindi vanno effettuati test specifici prima di utilizzare il prodotto Hilti in questione. I risultati dei calcoli effettuati mediante il software si basano essenzialmente sui dati che l'utente ha inserito. Di conseguenza l'utente è l'unico responsabile per l'assenza di errori, la completezza e la pertinenza dei dati che vanno immessi. Inoltre, l'utente ha la responsabilità di far controllare e correggere i risultati dei calcoli da parte di un esperto, con particolare riguardo al rispetto di norme e autorizzazioni, prima di utilizzarli per uno scopo specifico. Il software serve solo come un compendio per interpretare le norme e i permessi, senza alcuna garanzia circa l'assenza di errori, la correttezza e la pertinenza dei risultati o di idoneità per una specifica applicazione.
- L'utente deve applicare tutti gli accorgimenti necessari e ragionevoli per prevenire o limitare i danni causati dal software. In particolare, l'utente deve organizzare un backup periodico dei programmi e dei dati e, se necessario, effettuare gli aggiornamenti del software offerti da Hilti in maniera regolare. Se non si utilizza la funzione di aggiornamento automatico del software, l'utente deve assicurarsi di utilizzare l'ultima versione e quindi di mantenere aggiornato il Software effettuando aggiornamenti manuali dal sito web Hilti. Hilti non è responsabile per le conseguenze derivanti da una violazione colposa di responsabilità da parte dell'utente, come il recupero di dati o programmi persi o danneggiati.


PROFIS Anchor ( c ) 2003-2009 Hilti AG, FL-9494 Schaan  Hilti è un marchio registrato di Hilti AG, Schaan

## 2.2. Corpo A

### *2.2.1 Intonaco armato*

```
;---------------------------------------------------------------------------
;  midas Gen Text(MGT) File.
;  Date : 2020/6/15
;---------------------------------------------------------------------------

*VERSION
   8.8.1

*UNIT    ; Unit System
; FORCE, LENGTH, HEAT, TEMPER
   KN   , M, BTU, F

*PROJINFO    ; Project Information
; PROJECT, REVISION, USER, EMAIL, ADDRESS, TEL, FAX, CLIENT, TITLE, ENGINEER, EDATE
    ; One Line per Data
; CHECK1, CDATE1, CHECK2, CDATE2, CHECK3, CDATE3, APPROVE, ADATE, COMMENT
    ; One Line per Data
   USER=Nicola
   ADDRESS=DiMoRe

*STRUCTYPE    ; Structure Type
; iSTYP, iMASS, iSMAS, bMASSOFFSET, bSELFWEIGHT, GRAV, TEMPER, bALIGNBEAM, bALIGNSLAB,
 bROTRIGID
     0, 1, 1, NO, YES, 9.806, 0, NO, NO, YES

*REBAR-MATL-CODE    ; Rebar Material Code
; CONC_CODE, CONC_MDB, SRC_CODE, SRC_MDB
 NTC08(RC), B450C, ASTM(RC), Grade 60

*NODE    ; Nodes
; iNO, X, Y, Z
     1, 1.39999537783176, 28.3112377199097, -1
    15, 16.9499953778329, 28.3112377199095, -1
    18, 16.9499953778329, 22.9499995830372, -1
    24, 1.39999537783176, 22.9499995830378, -1
    65, 23.3999953778318, 28.3112377199097, -1
    66, 23.3999953778318, 19.6001517720915, -1
    67, 16.9499953778329, 19.5922327847465, -1
    69, 29.7499953778321, 26.0112377199091, -1
    73, 29.7499953778321, 19.5999995830378, -1
    75, 16.9499953778329, 16.324109464305, -1
    78, 23.3986127198418, 16.3239572752514, -1
    80, 29.7499953778321, 16.3260418908237, -1
    81, 29.7499953778321, 9.89999958303782, -1
    85, 23.4000223495501, 9.89999958303782, -1
    86, 16.9499953778329, 9.89999958303782, -1
   102, 23.3999953778318, 26.0112377199091, -1
   115, 28.9374953778322, 9.89999958303782, -1
   118, 23.4000223495501, 9.89999958303782, 3.35
   119, 28.9374953778322, 9.89999958303782, 3.35
   120, 17.3124953778321, 16.3245545236711, -1
   121, 21.1618040488368, 16.3239572752514, -1
   122, 27.3374953778319, 16.3239572808237, -1
   123, 17.3124953778321, 16.3245545236711, 3.35
   124, 21.1618040488368, 16.3239572752514, 3.35
   125, 27.3374953778319, 16.3239572808237, 3.35
   132, 13.2999953778315, 22.9499995830378, -1
   134, 3.23749537783205, 22.9499995830378, -1
   135, 20.1749953778323, 19.596192278419, -1
   136, 3.23749537783205, 22.9499995830378, 3.35
   138, 13.2999953778315, 22.9499995830378, 3.35
   139, 16.4749953778315, 22.9499995830372, -1
```

```
140, 16.4749953778315, 22.9499995830372, 3.35
141, 20.1749953778323, 19.596192278419, 3.35
142, 27.3374953778319, 19.5999995830378, -1
143, 27.3374953778319, 19.5999995830378, 3.35
144, 1.82249537783118, 28.3112377199097, -1
145, 6.14999537783177, 28.3112377199097, -1
146, 9.79499537783235, 28.3112377199094, -1
147, 11.7499953778323, 28.3112377199091, -1
148, 13.2999953778315, 28.3112377199097, -1
149, 14.8499953778306, 28.3112377199091, -1
150, 22.6274953778321, 28.3112377199097, -1
151, 26.5749953778319, 26.0112377199091, -1
153, 18.0699953778335, 28.3112377199091, -1
154, 1.82249537783118, 28.3112377199097, 3.35
155, 6.14999537783177, 28.3112377199097, 3.35
156, 9.79499537783235, 28.3112377199094, 3.35
157, 11.7499953778323, 28.3112377199091, 3.35
158, 13.2999953778315, 28.3112377199097, 3.35
159, 14.8499953778306, 28.3112377199091, 3.35
160, 16.9499953778329, 28.3112377199095, 3.35
161, 18.0699953778335, 28.3112377199091, 3.35
162, 22.6274953778321, 28.3112377199097, 3.35
163, 26.5749953778319, 26.0112377199091, 3.35
164, 1.39999537783176, 25.6306186514737, -1
169, 29.7499953778321, 25.1181186514729, -1
170, 29.7499953778321, 20.2874995830372, -1
171, 29.7499953778321, 13.1130207369307, -1
172, 23.3993175346959, 13.1119784291446, -1
173, 16.9499953778329, 13.1120545236714, -1
175, 16.9499953778329, 25.9662377199095, -1
177, 23.3999953778318, 21.6551517720915, -1
189, 16.9499953778329, 13.1120545236714, 3.35
190, 23.3993175346959, 13.1119784291446, 3.35
191, 29.7499953778321, 13.1130207369307, 3.35
193, 16.9499953778329, 20.0086161838916, -1
194, 16.9499953778329, 20.0086161838916, 3.35
195, 23.3999953778318, 21.6551517720915, 3.35
196, 23.3999953778318, 26.0112377199091, 3.35
197, 29.7499953778321, 20.2874995830372, 3.35
198, 1.39999537783176, 25.6306186514737, 3.35
199, 16.9499953778329, 25.9662377199095, 3.35
200, 16.9499953778329, 22.9499995830372, 3.35
201, 29.7499953778321, 25.1181186514729, 3.35
206, 1.39999537783176, 22.9499995830378, 3.35
207, 1.39999537783176, 28.3112377199097, 3.35
208, 16.9499953778329, 9.89999958303782, 3.35
209, 16.9499953778329, 16.324109464305, 3.35
210, 16.9499953778329, 19.5922327847465, 3.35
211, 23.3986127198418, 16.3239572752514, 3.35
212, 29.7499953778321, 16.3260418908237, 3.35
213, 29.7499953778321, 9.89999958303782, 3.35
214, 29.7499953778321, 26.0112377199091, 3.35
215, 29.7499953778321, 19.5999995830378, 3.35
216, 23.3999953778318, 28.3112377199097, 3.35
217, 23.3999953778318, 19.6001517720915, 3.35
241, 16.9499953778329, 12.701041890823, 3.35
242, 16.9499953778329, 11.3277707369302, 3.35
252, 3.69999537783206, 22.9499995830378, 3.35
376, 9.93499537783235, 22.9499995830378, -1
377, 9.93499537783235, 22.9499995830378, 3.35
379, 8.04499537783235, 22.9499995830378, -1
380, 8.04499537783293, 22.9499995830378, 3.35
```

```
396, 7.12499537783352, 22.9499995830378, -1
397, 7.12499537783352, 22.9499995830378, 3.35
460, 18.2799953778329, 9.89999958303782, 3.35
461, 18.2799953778321, 9.89999958303782, -1
462, 23.3999953778318, 27.1612377199094, 3.35
463, 23.3999953778318, 27.1612377199094, -1
464, 23.3999953778318, 24.8012377199091, -1
465, 23.3999953778318, 24.8012377199091, 3.35
477, 3.23749537783205, 22.9499995830378, 1.9
478, 13.2999953778315, 22.9499995830378, 1.9
479, 16.4749953778315, 22.9499995830372, 1.9
480, 9.93499537783235, 22.9499995830378, 1.9
481, 8.04499537783293, 22.9499995830378, 1.9
482, 7.12499537783352, 22.9499995830378, 1.9
483, 3.23749537783205, 22.9499995830378, 2.625
484, 13.2999953778315, 22.9499995830378, 2.625
485, 16.4749953778315, 22.9499995830372, 2.625
486, 9.93499537783235, 22.9499995830378, 2.625
487, 8.04499537783293, 22.9499995830378, 2.625
488, 7.12499537783352, 22.9499995830378, 2.625
489, 5.07749537783205, 22.9499995830378, 2.625
490, 6.32499537783352, 22.9499995830378, 2.625
491, 8.16999537783293, 22.9499995830378, 2.625
492, 9.29499537783235, 22.9499995830378, 2.625
493, 10.5749953778323, 22.9499995830378, 2.625
494, 15.1849953778315, 22.9499995830378, 2.625
495, 11.4149953778315, 22.9499995830378, 2.625
496, 15.9999953778315, 22.9499995830372, 2.625
553, 17.3124953778321, 16.3245545236711, 2.4
554, 21.1618040488368, 16.3239572752514, 2.4
555, 27.3374953778319, 19.5999995830378, 2.4
556, 23.3999953778318, 19.6001517720915, 2.4
557, 17.3124953778321, 16.3245545236711, 2.875
558, 21.1618040488368, 16.3239572752514, 2.875
559, 27.3374953778319, 19.5999995830378, 2.875
560, 23.3999953778318, 19.6001517720915, 2.875
561, 23.5249953778318, 19.6001517720915, 2.875
562, 24.9224953778319, 19.5999995830378, 2.875
563, 18.9268040488368, 16.3239572752514, 2.875
564, 17.6874953778321, 16.3245545236711, 2.875
565, 23.3986130488368, 16.3239572752514, 2.4
566, 23.3986130488368, 16.3239572752514, 2.875
567, 27.3374950488368, 16.3239572812514, 2.4
568, 27.3374950488368, 16.3239572812514, 2.875
569, 23.5236130488368, 16.3239572752514, 2.875
570, 24.9224950488368, 16.3239572812514, 2.875
571, 23.4000223495501, 9.89999958303782, 2.9
572, 28.9374953778322, 9.89999958303782, 2.9
573, 1.82249537783118, 28.3112377199097, 2.9
574, 6.14999537783177, 28.3112377199097, 2.9
575, 9.79499537783235, 28.3112377199094, 2.9
576, 11.7499953778323, 28.3112377199091, 2.9
577, 13.2999953778315, 28.3112377199097, 2.9
578, 14.8499953778306, 28.3112377199091, 2.9
579, 16.9499953778329, 28.3112377199095, 2.9
580, 18.0699953778335, 28.3112377199091, 2.9
581, 22.6274953778321, 28.3112377199097, 2.9
582, 29.7499953778321, 20.2874995830372, 2.9
583, 29.7499953778321, 25.1181186514729, 2.9
584, 18.2799953778329, 9.89999958303782, 2.9
585, 23.4000223495501, 9.89999958303782, 3.125
586, 28.9374953778322, 9.89999958303782, 3.125
```

```
   587, 1.82249537783118, 28.3112377199097, 3.125
   588, 6.14999537783177, 28.3112377199097, 3.125
   589, 9.79499537783235, 28.3112377199094, 3.125
   590, 11.7499953778323, 28.3112377199091, 3.125
   591, 13.2999953778315, 28.3112377199097, 3.125
   592, 14.8499953778306, 28.3112377199091, 3.125
   593, 16.9499953778329, 28.3112377199095, 3.125
   594, 18.0699953778335, 28.3112377199091, 3.125
   595, 22.6274953778321, 28.3112377199097, 3.125
   596, 29.7499953778321, 20.2874995830372, 3.125
   597, 29.7499953778321, 25.1181186514729, 3.125
   598, 18.2799953778329, 9.89999958303782, 3.125
   599, 2.30749537783118, 28.3112377199097, 3.125
   600, 5.55499537783177, 28.3112377199097, 3.125
   601, 6.74499537783177, 28.3112377199097, 3.125
   602, 10.2949953778323, 28.3112377199094, 3.125
   603, 9.29499537783235, 28.3112377199094, 3.125
   604, 11.6049953778323, 28.3112377199091, 3.125
   605, 11.8949953778323, 28.3112377199091, 3.125
   606, 14.9949953778306, 28.3112377199091, 3.125
   607, 14.7049953778306, 28.3112377199091, 3.125
   608, 13.3949953778315, 28.3112377199097, 3.125
   609, 13.2049953778315, 28.3112377199097, 3.125
   610, 21.8524953778321, 28.3112377199097, 3.125
   611, 18.5449953778335, 28.3112377199091, 3.125
   612, 28.1224953778322, 9.89999958303782, 3.125
   613, 21.9250223495501, 9.89999958303782, 3.125
   614, 24.8750223495501, 9.89999958303782, 3.125
   615, 18.6999953778329, 9.89999958303782, 3.125
   616, 29.7499953778321, 24.2231186514729, 3.125
   617, 29.7499953778321, 20.9724995830372, 3.125

*ELEMENT    ; Elements
; iEL, TYPE, iMAT, iPRO, iN1, iN2, ANGLE, iSUB,                      ; Frame  Element
; iEL, TYPE, iMAT, iPRO, iN1, iN2, ANGLE, iSUB, EXVAL, EXVAL2, bLMT ; Comp/Tens Truss
; iEL, TYPE, iMAT, iPRO, iN1, iN2, iN3, iN4, iSUB, iWID , LCAXIS    ; Planar Element
; iEL, TYPE, iMAT, iPRO, iN1, iN2, iN3, iN4, iN5, iN6, iN7, iN8     ; Solid  Element
     9, BEAM  ,    1,   119,   164,   198,    90,     0
    10, BEAM  ,    1,    28,   144,   573,     0,     0
    12, BEAM  ,    3,    22,   134,   477,     0,     0
    18, BEAM  ,    1,    29,   145,   574,     0,     0
    24, BEAM  ,    3,    23,   396,   482,     0,     0
    26, BEAM  ,    1,    30,   146,   575,     0,     0
    27, BEAM  ,    3,    38,   376,   480,     0,     0
    30, BEAM  ,    1,    31,   147,   576,     0,     0
    33, BEAM  ,    3,    24,   132,   478,     0,     0
    34, BEAM  ,    1,    32,   148,   577,     0,     0
    39, BEAM  ,    1,    33,   149,   578,     0,     0
    40, BEAM  ,    1,    25,   139,   479,     0,     0
    41, BEAM  ,    7,   111,   173,   189,    90,     0
    42, BEAM  ,    1,   115,   193,   194,    90,     0
    43, BEAM  ,    7,   121,    18,   200,    90,     0
    44, BEAM  ,    7,   120,   175,   199,    90,     0
    45, BEAM  ,    1,    34,    15,   579,     0,     0
    46, BEAM  ,    1,    14,   120,   553,     0,     0
    47, BEAM  ,    1,    11,   461,   584,     0,     0
    48, BEAM  ,    1,    35,   153,   580,     0,     0
    49, BEAM  ,    3,    26,   135,   141,     0,     0
    50, BEAM  ,    1,    15,   121,   554,     0,     0
    51, BEAM  ,    1,    36,   150,   581,     0,     0
    52, BEAM  ,    1,    12,    85,   571,     0,     0
    53, BEAM  ,    3,   112,   172,   190,    90,     0
```

```
   54, BEAM  ,    7,   117,   177,   195,    90,     0
   55, BEAM  ,    7,   707,   102,   196,    90,     0
   56, BEAM  ,    1,    37,   151,   163,     0,     0
   57, BEAM  ,    1,    16,   122,   567,     0,     0
   58, BEAM  ,    1,    27,   142,   555,     0,     0
   59, BEAM  ,    1,    13,   115,   572,     0,     0
   60, BEAM  ,    1,   113,   171,   191,    90,     0
   61, BEAM  ,    1,   118,   170,   582,    90,     0
   62, BEAM  ,    1,   122,   169,   583,    90,     0
 2001, BEAM  ,    3,   700,    78,   565,     0,     0
 2002, BEAM  ,    7,   707,    66,   556,     0,     0
 2003, BEAM  ,    3,   700,   379,   481,     0,     0
 2006, BEAM  ,    1,   700,    80,   212,     0,     0
 2007, BEAM  ,    1,   700,    73,   215,     0,     0
 2009, BEAM  ,    7,   707,    86,   208,     0,     0
 2010, BEAM  ,    1,   700,    81,   213,     0,     0
 2013, BEAM  ,    7,   707,    75,   209,     0,     0
 2014, BEAM  ,    3,   700,    67,   210,     0,     0
 2015, BEAM  ,    1,   700,    24,   206,     0,     0
 2016, BEAM  ,    1,   700,    69,   214,     0,     0
 2017, BEAM  ,    1,   700,     1,   207,     0,     0
 2018, BEAM  ,    1,   707,    65,   216,     0,     0
 6025, BEAM  ,    6,   701,   208,   460,     0,     0
 6027, BEAM  ,    6,   701,   118,   119,     0,     0
 6028, BEAM  ,    6,   701,   119,   213,     0,     0
 6032, BEAM  ,    6,   702,   208,   242,     0,     0
 6033, BEAM  ,    6,   702,   118,   190,     0,     0
 6034, BEAM  ,    6,   701,   213,   191,     0,     0
 6036, BEAM  ,    6,   702,   242,   241,     0,     0
 6045, BEAM  ,    6,   702,   241,   189,     0,     0
 6047, BEAM  ,    6,   702,   189,   209,     0,     0
 6048, BEAM  ,    6,   702,   190,   211,     0,     0
 6049, BEAM  ,    6,   701,   191,   212,     0,     0
 6050, BEAM  ,    6,   702,   209,   123,     0,     0
 6051, BEAM  ,    6,   702,   123,   124,     0,     0
 6052, BEAM  ,    6,   702,   124,   211,     0,     0
 6053, BEAM  ,    6,   702,   211,   125,     0,     0
 6054, BEAM  ,    6,   702,   125,   212,     0,     0
 6055, BEAM  ,    6,   702,   209,   210,     0,     0
 6056, BEAM  ,    6,   701,   212,   215,     0,     0
 6058, BEAM  ,    6,   702,   210,   141,     0,     0
 6059, BEAM  ,    6,   702,   141,   217,     0,     0
 6060, BEAM  ,    6,   702,   217,   143,     0,     0
 6061, BEAM  ,    6,   702,   143,   215,     0,     0
 6062, BEAM  ,    6,   702,   210,   194,     0,     0
 6063, BEAM  ,    6,   701,   215,   197,     0,     0
 6066, BEAM  ,    6,   702,   217,   195,     0,     0
 6067, BEAM  ,    6,   702,   194,   200,     0,     0
 6070, BEAM  ,    6,   701,   197,   201,     0,     0
 6071, BEAM  ,    6,   702,   206,   136,     0,     0
 6072, BEAM  ,    6,   702,   136,   252,     0,     0
 6073, BEAM  ,    6,   702,   252,   397,     0,     0
 6074, BEAM  ,    6,   702,   397,   380,     0,     0
 6075, BEAM  ,    6,   702,   380,   377,     0,     0
 6076, BEAM  ,    6,   702,   377,   138,     0,     0
 6077, BEAM  ,    6,   702,   138,   140,     0,     0
 6078, BEAM  ,    6,   702,   140,   200,     0,     0
 6079, BEAM  ,    6,   702,   195,   465,     0,     0
 6080, BEAM  ,    6,   701,   206,   198,     0,     0
 6081, BEAM  ,    6,   702,   200,   199,     0,     0
 6082, BEAM  ,    6,   701,   201,   214,     0,     0
 6083, BEAM  ,    6,   701,   196,   163,     0,     0
```

```
6084, BEAM  ,    6,   701,   163,   214,     0,     0
6085, BEAM  ,    6,   701,   198,   207,     0,     0
6086, BEAM  ,    6,   702,   199,   160,     0,     0
6087, BEAM  ,    6,   701,   196,   462,     0,     0
6088, BEAM  ,    6,   701,   207,   154,     0,     0
6089, BEAM  ,    6,   701,   154,   155,     0,     0
6090, BEAM  ,    6,   701,   155,   156,     0,     0
6091, BEAM  ,    6,   701,   156,   157,     0,     0
6092, BEAM  ,    6,   701,   157,   158,     0,     0
6093, BEAM  ,    6,   701,   158,   159,     0,     0
6094, BEAM  ,    6,   701,   159,   160,     0,     0
6095, BEAM  ,    6,   701,   160,   161,     0,     0
6096, BEAM  ,    6,   701,   161,   162,     0,     0
6097, BEAM  ,    6,   701,   162,   216,     0,     0
6109, BEAM  ,    6,   701,   460,   118,     0,     0
6110, BEAM  ,    6,   701,   462,   216,     0,     0
6111, BEAM  ,    1,   116,   463,   462,    90,     0
6112, BEAM  ,    6,   702,   465,   196,     0,     0
6113, BEAM  ,    7,   102,   464,   465,    90,     0
6127, BEAM  ,    4,    22,   477,   483,     0,     0
6128, BEAM  ,    4,    24,   478,   484,     0,     0
6129, BEAM  ,    2,    25,   479,   485,     0,     0
6130, BEAM  ,    4,    38,   480,   486,     0,     0
6131, BEAM  ,    4,   700,   481,   487,     0,     0
6132, BEAM  ,    4,    23,   482,   488,     0,     0
6133, BEAM  ,    4,    22,   483,   136,     0,     0
6134, BEAM  ,    4,    24,   484,   138,     0,     0
6135, BEAM  ,    2,    25,   485,   140,     0,     0
6136, BEAM  ,    4,    38,   486,   377,     0,     0
6137, BEAM  ,    4,   700,   487,   380,     0,     0
6138, BEAM  ,    4,    23,   488,   397,     0,     0
6139, BEAM  ,    4,   710,   483,   489,     0,     0
6140, BEAM  ,    4,   710,   487,   491,     0,     0
6141, BEAM  ,    4,   710,   486,   493,     0,     0
6142, BEAM  ,    4,   710,   484,   494,     0,     0
6143, BEAM  ,    3,   710,   489,   490,     0,     0
6144, BEAM  ,    4,   710,   490,   488,     0,     0
6145, BEAM  ,    3,   710,   491,   492,     0,     0
6146, BEAM  ,    4,   710,   492,   486,     0,     0
6147, BEAM  ,    3,   710,   493,   495,     0,     0
6148, BEAM  ,    3,   710,   494,   496,     0,     0
6149, BEAM  ,    4,   710,   495,   484,     0,     0
6150, BEAM  ,    4,   710,   496,   485,     0,     0
6217, BEAM  ,    2,    14,   553,   557,     0,     0
6218, BEAM  ,    2,    15,   554,   558,     0,     0
6219, BEAM  ,    2,    27,   555,   559,     0,     0
6220, BEAM  ,    2,   700,   556,   560,     0,     0
6221, BEAM  ,    2,    14,   557,   123,     0,     0
6222, BEAM  ,    2,    15,   558,   124,     0,     0
6223, BEAM  ,    2,    27,   559,   143,     0,     0
6224, BEAM  ,    2,   700,   560,   217,     0,     0
6225, BEAM  ,    2,   711,   557,   564,     0,     0
6226, BEAM  ,    2,   711,   560,   561,     0,     0
6227, BEAM  ,    1,   711,   561,   562,     0,     0
6228, BEAM  ,    2,   711,   562,   559,     0,     0
6229, BEAM  ,    2,   711,   563,   558,     0,     0
6230, BEAM  ,    1,   711,   564,   563,     0,     0
6231, BEAM  ,    4,   700,   565,   566,     0,     0
6232, BEAM  ,    4,   700,   566,   211,     0,     0
6233, BEAM  ,    2,    16,   567,   568,     0,     0
6234, BEAM  ,    2,    16,   568,   125,     0,     0
6235, BEAM  ,    4,   711,   566,   569,     0,     0
```

```
  6236, BEAM  ,    1,   711,   569,   570,     0,     0
  6237, BEAM  ,    2,   711,   570,   568,     0,     0
  6238, BEAM  ,    2,    12,   571,   585,     0,     0
  6239, BEAM  ,    2,    13,   572,   586,     0,     0
  6240, BEAM  ,    2,    28,   573,   587,     0,     0
  6241, BEAM  ,    2,    29,   574,   588,     0,     0
  6242, BEAM  ,    2,    30,   575,   589,     0,     0
  6243, BEAM  ,    2,    31,   576,   590,     0,     0
  6244, BEAM  ,    2,    32,   577,   591,     0,     0
  6245, BEAM  ,    2,    33,   578,   592,     0,     0
  6246, BEAM  ,    2,    34,   579,   593,     0,     0
  6247, BEAM  ,    2,    35,   580,   594,     0,     0
  6248, BEAM  ,    2,    36,   581,   595,     0,     0
  6249, BEAM  ,    2,   118,   582,   596,    90,     0
  6250, BEAM  ,    2,   122,   583,   597,    90,     0
  6251, BEAM  ,    2,    11,   584,   598,     0,     0
  6252, BEAM  ,    2,    12,   585,   118,     0,     0
  6253, BEAM  ,    2,    13,   586,   119,     0,     0
  6254, BEAM  ,    2,    28,   587,   154,     0,     0
  6255, BEAM  ,    2,    29,   588,   155,     0,     0
  6256, BEAM  ,    2,    30,   589,   156,     0,     0
  6257, BEAM  ,    2,    31,   590,   157,     0,     0
  6258, BEAM  ,    2,    32,   591,   158,     0,     0
  6259, BEAM  ,    2,    33,   592,   159,     0,     0
  6260, BEAM  ,    2,    34,   593,   160,     0,     0
  6261, BEAM  ,    2,    35,   594,   161,     0,     0
  6262, BEAM  ,    2,    36,   595,   162,     0,     0
  6263, BEAM  ,    2,   118,   596,   197,    90,     0
  6264, BEAM  ,    2,   122,   597,   201,    90,     0
  6265, BEAM  ,    2,    11,   598,   460,     0,     0
  6266, BEAM  ,    2,   712,   598,   615,     0,     0
  6267, BEAM  ,    2,   712,   585,   614,     0,     0
  6268, BEAM  ,    2,   712,   596,   617,     0,     0
  6269, BEAM  ,    2,   712,   587,   599,     0,     0
  6270, BEAM  ,    2,   712,   588,   601,     0,     0
  6271, BEAM  ,    2,   712,   589,   602,     0,     0
  6272, BEAM  ,    2,   712,   590,   605,     0,     0
  6273, BEAM  ,    2,   712,   591,   608,     0,     0
  6274, BEAM  ,    2,   712,   592,   606,     0,     0
  6275, BEAM  ,    2,   712,   594,   611,     0,     0
  6276, BEAM  ,    1,   712,   599,   600,     0,     0
  6277, BEAM  ,    2,   712,   600,   588,     0,     0
  6278, BEAM  ,    1,   712,   601,   603,     0,     0
  6279, BEAM  ,    1,   712,   602,   604,     0,     0
  6280, BEAM  ,    2,   712,   603,   589,     0,     0
  6281, BEAM  ,    2,   712,   604,   590,     0,     0
  6282, BEAM  ,    1,   712,   605,   609,     0,     0
  6283, BEAM  ,    1,   712,   606,   593,     0,     0
  6284, BEAM  ,    2,   712,   607,   592,     0,     0
  6285, BEAM  ,    1,   712,   608,   607,     0,     0
  6286, BEAM  ,    2,   712,   609,   591,     0,     0
  6287, BEAM  ,    2,   712,   610,   595,     0,     0
  6288, BEAM  ,    1,   712,   611,   610,     0,     0
  6289, BEAM  ,    2,   712,   612,   586,     0,     0
  6290, BEAM  ,    2,   712,   613,   585,     0,     0
  6291, BEAM  ,    1,   712,   614,   612,     0,     0
  6292, BEAM  ,    1,   712,   615,   613,     0,     0
  6293, BEAM  ,    2,   712,   616,   597,     0,     0
  6294, BEAM  ,    1,   712,   617,   616,     0,     0
  6295, BEAM  ,    3,   704,   488,   487,     0,     0

*GROUP    ; Group
```

```
; NAME, NODE_LIST, ELEM_LIST, PLANE_TYPE
   Midas     , , , 0
   SPUTTANATI, , , 0
   P2-P3 CA  , , , 0
   Linee sezione (D), , , 0

*BNDR-GROUP    ; Boundary Group
; NAME, AUTOTYPE
 fasce, 0
 pilastrini, 0

*MATERIAL    ; Material
; iMAT, TYPE, MNAME, SPHEAT, HEATCO, PLAST, TUNIT, bMASS, DAMPRATIO, [DATA1]
 ; STEEL, CONC, ALUMINUM, USER
; iMAT, TYPE, MNAME, SPHEAT, HEATCO, PLAST, TUNIT, bMASS, DAMPRATIO, [DATA2], [DATA2]
 ; SRC
; [DATA1] : 1, STANDARD, CODE/PRODUCT, DB, USEELAST, ELAST
; [DATA1] : 2, ELAST, POISN, THERMAL, DEN, MASS
; [DATA1] : 3, Ex, Ey, Ez, Tx, Ty, Tz, Sxy, Sxz, Syz, Pxy, Pxz, Pyz, DEN, MASS
 ; Orthotropic
; [DATA2] : 1, STANDARD, CODE/PRODUCT, DB, USEELAST, ELAST or 2, ELAST, POISN, THERMAL
, DEN, MASS
    1, USER , MA                , 0, 0, , C, NO, 0.05, 2, 1.5000e+006,  0.45, 0.0000e+
000,    18,     0
    2, USER , MA rigid          , 0, 0, , C, NO, 0.05, 2, 1.5000e+008,  0.45, 0.0000e+
000,     9,     0
    3, USER , MB                , 0, 0, , C, NO, 0.05, 2, 4.5000e+006,  0.45, 0.0000e+
000,    12,     0
    4, USER , MB rigid          , 0, 0, , C, NO, 0.05, 2, 4.5000e+008,  0.45, 0.0000e+
000,     6,     0
    5, USER , C16/20rigid       , 0, 0, , C, NO, 0, 2, 2.8607e+009,   0.2, 0.0000e+000
,    25,     0
    6, CONC , C16/20            , 0, 0, , C, NO, 0.05, 1, EN04(RC)   ,            , C1
6/20        , NO, 2.8607e+007
    7, USER , MA int            , 0, 0, , C, NO, 0.05, 2, 2.2500e+006,  0.45, 0.0000e+
000, 20.51,     0
    8, STEEL, S275              , 0, 0, , C, NO, 0.02, 1, EN05(S)    ,            , S2
75          , NO, 2.1e+008

*MATL-COLOR
; iMAT, W R, W G, W B, HF R, HF G, HF B, HE R, HE G, HE B, bBLEND, FACT
    1,   0,   0,   0,  255, 128,  64,    0,   0,   0,  NO, 0.5
    2,   0,   0,   0,  255, 128, 128,    0,   0,   0,  NO, 0.5
    3,   0,   0,   0,    0, 128,   0,    0,   0,   0,  NO, 0.5
    4,   0,   0,   0,    0, 206, 103,    0,   0,   0,  NO, 0.5
    5, 128,   0, 128,  255,   0,   0,    0, 255,   0,  NO, 0.5
    6,   0,   0,   0,  192, 192, 192,    0,   0,   0,  NO, 0.5
    7, 128,   0, 128,  255,   0,   0,    0, 255,   0,  NO, 0.5
    8, 128,   0, 128,  255,   0,   0,    0, 255,   0,  NO, 0.5


*SECTION    ; Section
; iSEC, TYPE, SNAME, [OFFSET], bSD, bWE, SHAPE, [DATA1], [DATA2]                    ;
1st line - DB/USER
; iSEC, TYPE, SNAME, [OFFSET], bSD, bWE, SHAPE, BLT, D1, ..., D8, iCEL              ;
1st line - VALUE
;       AREA, ASy, ASz, Ixx, Iyy, Izz                                               ;
2nd line
;       CyP, CyM, CzP, CzM, QyB, QzB, PERI_OUT, PERI_IN, Cy, Cz                     ;
3rd line
;       Y1, Y2, Y3, Y4, Z1, Z2, Z3, Z4, Zyy, Zzz                                    ;
4th line
```

```
; iSEC, TYPE, SNAME, [OFFSET], bSD, bWE, SHAPE, ELAST, DEN, POIS, POIC, SF, THERMAL ;
1st line - SRC
;       D1, D2, [SRC]                                                               ;
2nd line
; iSEC, TYPE, SNAME, [OFFSET], bSD, bWE, SHAPE, 1, DB, NAME1, NAME2, D1, D2         ;
1st line - COMBINED
; iSEC, TYPE, SNAME, [OFFSET], bSD, bWE, SHAPE, 2, D11, D12, D13, D14, D15, D21, D22,
D23, D24
; iSEC, TYPE, SNAME, [OFFSET2], bSD, bWE, SHAPE, iyVAR, izVAR, STYPE                ;
1st line - TAPERED
;       DB, NAME1, NAME2                                                            ;
2nd line(STYPE=DB)
;       [DIM1], [DIM2]                                                              ;
2nd line(STYPE=USER)
;       D11, D12, D13, D14, D15, D16, D17, D18                                      ;
2nd line(STYPE=VALUE)
;       AREA1, ASy1, ASz1, Ixx1, Iyy1, Izz1                                         ;
3rd line(STYPE=VALUE)
;       CyP1, CyM1, CzP1, CzM1, QyB1, QzB1, PERI_OUT1, PERI_IN1, Cy1, Cz1           ;
4th line(STYPE=VALUE)
;       Y11, Y12, Y13, Y14, Z11, Z12, Z13, Z14, Zyy1, Zyy2                          ;
5th line(STYPE=VALUE)
;       D21, D22, D23, D24, D25, D26, D27, D28                                      ;
6th line(STYPE=VALUE)
;       AREA2, ASy2, ASz2, Ixx2, Iyy2, Izz2                                         ;
7th line(STYPE=VALUE)
;       CyP2, CyM2, CzP2, CzM2, QyB2, QzB2, PERI_OUT2, PERI_IN2, Cy2, Cz2           ;
8th line(STYPE=VALUE)
;       Y21, Y22, Y23, Y24, Z21, Z22, Z23, Z24, Zyy2, Zzz2                          ;
9th line(STYPE=VALUE)
; iSEC, TYPE, SNAME, [OFFSET], bSD, bWE, SHAPE                                      ;
1st line - COMPOSITE-B
;       Hw, tw, B1, Bf1, tf1, B2, Bf2, tf2                                          ;
2nd line
;       [SHAPE-NUM], [STIFF-SHAPE], [STIFF-POS] (1~4)                               ;
3rd line
;       SW, GN, CTC, Bc, Tc, Hh, EsEc, DsDc, Ps, Pc, TsTc, bMulti, Elong, Esh       ;
4th line
; iSEC, TYPE, SNAME, [OFFSET], bSD, bWE, SHAPE                                      ;
1st line - COMPOSITE-I
;       Hw, tw, B1, tf1, B2, tf2                                                    ;
2nd line
;       [SHAPE-NUM], [STIFF-SHAPE], [STIFF-POS] (1~2)                               ;
3rd line
;       SW, GN, CTC, Bc, Tc, Hh, EsEc, DsDc, Ps, Pc, TsTc, bMulti, Elong, Esh       ;
4th line
; iSEC, TYPE, SNAME, [OFFSET], bSD, bWE, SHAPE                                      ;
1st line - COMPOSITE-TUB
;       Hw, tw, B1, Bf1, tf1, B2, Bf2, tf2, Bf3, tfp                                ;
2nd line
;       [SHAPE-NUM], [STIFF-SHAPE], [STIFF-POS] (1~3)                               ;
3rd line
;       SW, GN, CTC, Bc, Tc, Hh, EsEc, DsDc, Ps, Pc, TsTc, bMulti, Elong, Esh       ;
4th line
; [DATA1] : 1, DB, NAME or 2, D1, D2, D3, D4, D5, D6, D7, D8, D9, D10
; [DATA2] : CCSHAPE or iCEL or iN1, iN2
; [SRC]  : 1, DB, NAME1, NAME2 or 2, D1, D2, D3, D4, D5, D6, D7, D8, D9, D10, iN1, iN2

; [DIM1], [DIM2] : D1, D2, D3, D4, D5, D6, D7, D8
; [OFFSET] : OFFSET, iCENT, iREF, iHORZ, HUSER, iVERT, VUSER
; [OFFSET2]: OFFSET, iCENT, iREF, iHORZ, HUSERI, HUSERJ, iVERT, VUSERI, VUSERJ
; [SHAPE-NUM]: SHAPE-NUM, POS, STIFF-NUM1, STIFF-NUM2, STIFF-NUM3, STIFF-NUM4
```

```
; [STIFF-SHAPE]: SHAPE-NUM, for(SHAPE-NUM) { NAME, SIZE1~8 }
; [STIFF-POS]: STIFF-NUM, for(STIFF-NUM) { SPACING, iSHAPE, bCALC }
    1, DBUSER    , L0_X1            , CC, 0, 0, 0, 0, 0, 0, YES, NO, SB , 2, 1.93, 0.
36, 0, 0, 0, 0, 0, 0, 0, 0
    2, DBUSER    , L0_X2            , CC, 0, 0, 0, 0, 0, 0, YES, NO, SB , 2, 0.65, 0.
36, 0, 0, 0, 0, 0, 0, 0, 0
    3, DBUSER    , L0_X2bis         , CC, 0, 0, 0, 0, 0, 0, YES, NO, SB , 2, 1.225, 0
.36, 0, 0, 0, 0, 0, 0, 0, 0
    4, DBUSER    , L0_X3            , CC, 0, 0, 0, 0, 0, 0, YES, NO, SB , 2, 1.83, 0.
36, 0, 0, 0, 0, 0, 0, 0, 0
    5, DBUSER    , L0_X4            , CC, 0, 0, 0, 0, 0, 0, YES, NO, SB , 2, 1.25, 0.
36, 0, 0, 0, 0, 0, 0, 0, 0
    6, DBUSER    , L0_X5            , CC, 0, 0, 0, 0, 0, 0, YES, NO, SB , 2, 0.47, 0.
36, 0, 0, 0, 0, 0, 0, 0, 0
    7, DBUSER    , L0_X6            , CC, 0, 0, 0, 0, 0, 0, YES, NO, SB , 2, 4.68, 0.
25, 0, 0, 0, 0, 0, 0, 0, 0
    8, DBUSER    , L0_X7            , CC, 0, 0, 0, 0, 0, 0, YES, NO, SB , 2, 1.53, 0.
25, 0, 0, 0, 0, 0, 0, 0, 0
    9, DBUSER    , L0_X8            , CC, 0, 0, 0, 0, 0, 0, YES, NO, SB , 2, 1.75, 0.
25, 0, 0, 0, 0, 0, 0, 0, 0
   10, DBUSER    , L0_X9            , CC, 0, 0, 0, 0, 0, 0, YES, NO, SB , 2, 1.33, 0.
25, 0, 0, 0, 0, 0, 0, 0, 0
   11, DBUSER    , L0_X10           , CC, 0, 0, 0, 0, 0, 0, YES, NO, SB , 2, 0.78, 0.
36, 0, 0, 0, 0, 0, 0, 0, 0
   12, DBUSER    , L0_X11           , CC, 0, 0, 0, 0, 0, 0, YES, NO, SB , 2, 2.95, 0.
36, 0, 0, 0, 0, 0, 0, 0, 0
   13, DBUSER    , L0_X12           , CC, 0, 0, 0, 0, 0, 0, YES, NO, SB , 2, 1.63, 0.
36, 0, 0, 0, 0, 0, 0, 0, 0
   14, DBUSER    , L0_X13           , CC, 0, 0, 0, 0, 0, 0, YES, NO, SB , 2, 0.75, 0.
25, 0, 0, 0, 0, 0, 0, 0, 0
   15, DBUSER    , L0_X14           , CC, 0, 0, 0, 0, 0, 0, YES, NO, SB , 2, 4.47, 0.
25, 0, 0, 0, 0, 0, 0, 0, 0
   16, DBUSER    , L0_X15           , CC, 0, 0, 0, 0, 0, 0, YES, NO, SB , 2, 4.83, 0.
25, 0, 0, 0, 0, 0, 0, 0, 0
   17, DBUSER    , L0_X16           , CC, 0, 0, 0, 0, 0, 0, YES, NO, SB , 2, 0.3, 0.3
6, 0, 0, 0, 0, 0, 0, 0, 0
   18, DBUSER    , L0_X17           , CC, 0, 0, 0, 0, 0, 0, YES, NO, SB , 2, 0.5, 0.3
6, 0, 0, 0, 0, 0, 0, 0, 0
   19, DBUSER    , L0_X18           , CC, 0, 0, 0, 0, 0, 0, YES, NO, SB , 2, 0.65, 0.
36, 0, 0, 0, 0, 0, 0, 0, 0
   20, DBUSER    , catene           , CC, 0, 0, 0, 0, 0, 0, YES, NO, SR , 2, 0.024, 0
, 0, 0, 0, 0, 0, 0, 0, 0
   22, DBUSER    , L0_X21           , CC, 0, 0, 0, 0, 0, 0, YES, NO, SB , 2, 3.68, 0.
25, 0, 0, 0, 0, 0, 0, 0, 0
   23, DBUSER    , L0_X22           , CC, 0, 0, 0, 0, 0, 0, YES, NO, SB , 2, 1.6, 0.2
5, 0, 0, 0, 0, 0, 0, 0, 0
   24, DBUSER    , L0_X23           , CC, 0, 0, 0, 0, 0, 0, YES, NO, SB , 2, 3.77, 0.
25, 0, 0, 0, 0, 0, 0, 0, 0
   25, DBUSER    , L0_X24           , CC, 0, 0, 0, 0, 0, 0, YES, NO, SB , 2, 0.95, 0.
25, 0, 0, 0, 0, 0, 0, 0, 0
   26, DBUSER    , L0_X25           , CC, 0, 0, 0, 0, 0, 0, YES, NO, SB , 2, 6.45, 0.
25, 0, 0, 0, 0, 0, 0, 0, 0
   27, DBUSER    , L0_X26           , CC, 0, 0, 0, 0, 0, 0, YES, NO, SB , 2, 4.83, 0.
25, 0, 0, 0, 0, 0, 0, 0, 0
   28, DBUSER    , L0_X27           , CC, 0, 0, 0, 0, 0, 0, YES, NO, SB , 2, 0.97, 0.
36, 0, 0, 0, 0, 0, 0, 0, 0
   29, DBUSER    , L0_X28           , CC, 0, 0, 0, 0, 0, 0, YES, NO, SB , 2, 1.19, 0.
36, 0, 0, 0, 0, 0, 0, 0, 0
   30, DBUSER    , L0_X29           , CC, 0, 0, 0, 0, 0, 0, YES, NO, SB , 2, 1, 0.36,
 0, 0, 0, 0, 0, 0, 0, 0
   31, DBUSER    , L0_X30           , CC, 0, 0, 0, 0, 0, 0, YES, NO, SB , 2, 0.29, 0.
36, 0, 0, 0, 0, 0, 0, 0, 0
```

```
   32, DBUSER    , L0_X31            , CC, 0, 0, 0, 0, 0, 0, YES, NO, SB , 2, 0.19, 0.
36, 0, 0, 0, 0, 0, 0, 0, 0
   33, DBUSER    , L0_X32            , CC, 0, 0, 0, 0, 0, 0, YES, NO, SB , 2, 0.29, 0.
36, 0, 0, 0, 0, 0, 0, 0, 0
   34, DBUSER    , L0_X33            , CC, 0, 0, 0, 0, 0, 0, YES, NO, SB , 2, 1.29, 0.
36, 0, 0, 0, 0, 0, 0, 0, 0
   35, DBUSER    , L0_X33bis         , CC, 0, 0, 0, 0, 0, 0, YES, NO, SB , 2, 0.95, 0.
36, 0, 0, 0, 0, 0, 0, 0, 0
   36, DBUSER    , L0_X34            , CC, 0, 0, 0, 0, 0, 0, YES, NO, SB , 2, 1.55, 0.
36, 0, 0, 0, 0, 0, 0, 0, 0
   37, DBUSER    , L0_X35            , CC, 0, 0, 0, 0, 0, 0, YES, NO, SB , 2, 6.35, 0.
36, 0, 0, 0, 0, 0, 0, 0, 0
   38, DBUSER    , L0_X22bis         , CC, 0, 0, 0, 0, 0, 0, YES, NO, SB , 2, 1.28, 0.
25, 0, 0, 0, 0, 0, 0, 0, 0
  100, DBUSER    , L0_Y01            , CC, 0, 0, 0, 0, 0, 0, YES, NO, SB , 2, 7.4, 0.3
6, 0, 0, 0, 0, 0, 0, 0, 0
  101, DBUSER    , L0_Y02            , CC, 0, 0, 0, 0, 0, 0, YES, NO, SB , 2, 1.62, 0.
25, 0, 0, 0, 0, 0, 0, 0, 0
  102, DBUSER    , L0_Y02bis         , CC, 0, 0, 0, 0, 0, 0, YES, NO, SB , 2, 2.18, 0.
39, 0, 0, 0, 0, 0, 0, 0, 0
  103, DBUSER    , L0_Y02tris        , CC, 0, 0, 0, 0, 0, 0, YES, NO, SB , 2, 3.55, 0.
25, 0, 0, 0, 0, 0, 0, 0, 0
  104, DBUSER    , L0_Y03            , CC, 0, 0, 0, 0, 0, 0, YES, NO, SB , 2, 1.54, 0.
36, 0, 0, 0, 0, 0, 0, 0, 0
  105, DBUSER    , L0_Y04            , CC, 0, 0, 0, 0, 0, 0, YES, NO, SB , 2, 1.2, 0.3
6, 0, 0, 0, 0, 0, 0, 0, 0
  106, DBUSER    , L0_Y04bis         , CC, 0, 0, 0, 0, 0, 0, YES, NO, SB , 2, 0.59, 0.
36, 0, 0, 0, 0, 0, 0, 0, 0
  107, DBUSER    , L0_Y05            , CC, 0, 0, 0, 0, 0, 0, YES, NO, SB , 2, 1.25, 0.
25, 0, 0, 0, 0, 0, 0, 0, 0
  108, DBUSER    , L0_Y06            , CC, 0, 0, 0, 0, 0, 0, YES, NO, SB , 2, 1.15, 0.
36, 0, 0, 0, 0, 0, 0, 0, 0
  109, DBUSER    , L0_Y07            , CC, 0, 0, 0, 0, 0, 0, YES, NO, SB , 2, 1.18, 0.
25, 0, 0, 0, 0, 0, 0, 0, 0
  110, DBUSER    , L0 Y08            , CC, 0, 0, 0, 0, 0, 0, YES, NO, SB , 2, 2.75, 0.
36, 0, 0, 0, 0, 0, 0, 0, 0
  111, DBUSER    , L0_Y09            , CC, 0, 0, 0, 0, 0, 0, YES, NO, SB , 2, 6.43, 0.
39, 0, 0, 0, 0, 0, 0, 0, 0
  112, DBUSER    , L0_Y10            , CC, 0, 0, 0, 0, 0, 0, YES, NO, SB , 2, 6.43, 0.
25, 0, 0, 0, 0, 0, 0, 0, 0
  113, DBUSER    , L0 Y11            , CC, 0, 0, 0, 0, 0, 0, YES, NO, SB , 2, 6.43, 0.
36, 0, 0, 0, 0, 0, 0, 0, 0
  114, DBUSER    , L0_Y12            , CC, 0, 0, 0, 0, 0, 0, YES, NO, SB , 2, 0.84, 0.
36, 0, 0, 0, 0, 0, 0, 0, 0
  115, DBUSER    , L0_Y13            , CC, 0, 0, 0, 0, 0, 0, YES, NO, SB , 2, 0.83, 0.
25, 0, 0, 0, 0, 0, 0, 0, 0
  116, DBUSER    , L0_Y14            , CC, 0, 0, 0, 0, 0, 0, YES, NO, SB , 2, 2.55, 0.
36, 0, 0, 0, 0, 0, 0, 0, 0
  117, DBUSER    , L0_Y14bis         , CC, 0, 0, 0, 0, 0, 0, YES, NO, SB , 2, 4.11, 0.
39, 0, 0, 0, 0, 0, 0, 0, 0
  118, DBUSER    , L0_Y15            , CC, 0, 0, 0, 0, 0, 0, YES, NO, SB , 2, 1.37, 0.
36, 0, 0, 0, 0, 0, 0, 0, 0
  119, DBUSER    , L0_Y16            , CC, 0, 0, 0, 0, 0, 0, YES, NO, SB , 2, 5.61, 0.
36, 0, 0, 0, 0, 0, 0, 0, 0
  120, DBUSER    , L0_Y17            , CC, 0, 0, 0, 0, 0, 0, YES, NO, SB , 2, 4.69, 0.
39, 0, 0, 0, 0, 0, 0, 0, 0
  121, DBUSER    , L0_Y17bis         , CC, 0, 0, 0, 0, 0, 0, YES, NO, SB , 2, 1.35, 0.
39, 0, 0, 0, 0, 0, 0, 0, 0
  122, DBUSER    , L0_Y18            , CC, 0, 0, 0, 0, 0, 0, YES, NO, SB , 2, 1.79, 0.
36, 0, 0, 0, 0, 0, 0, 0, 0
  700, DBUSER    , Pilastro fitt     , CC, 0, 0, 0, 0, 0, 0, YES, NO, SB , 2, 0.248, 0
.248, 0, 0, 0, 0, 0, 0, 0, 0
```

```
  701, DBUSER    , cordolo 40x21     , CC, 0, 0, 0, 0, 0, 0, YES, NO, SB , 2, 0.21, 0.
4, 0, 0, 0, 0, 0, 0, 0, 0
  702, DBUSER    , cordolo 30x21     , CC, 0, 0, 0, 0, 0, 0, YES, NO, SB , 2, 0.21, 0.
3, 0, 0, 0, 0, 0, 0, 0, 0
  703, DBUSER    , cordolo RIGID     , CC, 0, 0, 0, 0, 0, 0, YES, NO, SB , 2, 0.2, 0.4
, 0, 0, 0, 0, 0, 0, 0, 0
  704, DBUSER    , cordolo fitt      , CC, 0, 0, 0, 0, 0, 0, YES, NO, SB , 2, 0.2, 0.2
5, 0, 0, 0, 0, 0, 0, 0, 0
  707, DBUSER    , Pilastro          , CC, 0, 0, 0, 0, 0, 0, YES, NO, SB , 2, 0.37, 0.
37, 0, 0, 0, 0, 0, 0, 0, 0
  708, DBUSER    , Trave             , CC, 0, 0, 0, 0, 0, 0, YES, NO, SB , 2, 0.25, 0.
55, 0, 0, 0, 0, 0, 0, 0, 0
  709, DBUSER    , Fascia 0.60x0.36  , CC, 0, 0, 0, 0, 0, 0, YES, NO, SB , 2, 0.6, 0.3
6, 0, 0, 0, 0, 0, 0, 0, 0
  710, DBUSER    , Fascia 1.45x0.25  , CC, 0, 0, 0, 0, 0, 0, YES, NO, SB , 2, 1.45, 0.
25, 0, 0, 0, 0, 0, 0, 0, 0
  711, DBUSER    , Fascia 0.95x0.25  , CC, 0, 0, 0, 0, 0, 0, YES, NO, SB , 2, 0.95, 0.
25, 0, 0, 0, 0, 0, 0, 0, 0
  712, DBUSER    , Fascia 0.45x0.36  , CC, 0, 0, 0, 0, 0, 0, YES, NO, SB , 2, 0.45, 0.
36, 0, 0, 0, 0, 0, 0, 0, 0
 1000, DBUSER    , LINE              , CC, 0, 0, 0, 0, 0, 0, YES, NO, SB , 2, 0.01, 0.
01, 0, 0, 0, 0, 0, 0, 0, 0

*SECT-COLOR
; iSEC, W_R, W_G, W_B, HF_R, HF_G, HF_B, HE_R, HE_G, HE_B, bBLEND, FACT
    1, 128,   0, 128,  255,   0,   0,    0, 255,   0,  NO, 0.5
    2, 128,   0, 128,  255,   0,   0,    0, 255,   0,  NO, 0.5
    3, 128,   0, 128,  255,   0,   0,    0, 255,   0,  NO, 0.5
    4, 128,   0, 128,  255,   0,   0,    0, 255,   0,  NO, 0.5
    5, 128,   0, 128,  255,   0,   0,    0, 255,   0,  NO, 0.5
    6, 128,   0, 128,  255,   0,   0,    0, 255,   0,  NO, 0.5
    7, 128,   0, 128,  255,   0,   0,    0, 255,   0,  NO, 0.5
    8, 128,   0, 128,  255,   0,   0,    0, 255,   0,  NO, 0.5
    9, 128,   0, 128,  255,   0,   0,    0, 255,   0,  NO, 0.5
   10, 128,   0, 128,  255,   0,   0,    0, 255,   0,  NO, 0.5
   11, 128,   0, 128,  255,   0,   0,    0, 255,   0,  NO, 0.5
   12, 128,   0, 128,  255,   0,   0,    0, 255,   0,  NO, 0.5
   13, 128,   0, 128,  255,   0,   0,    0, 255,   0,  NO, 0.5
   14, 128,   0, 128,  255,   0,   0,    0, 255,   0,  NO, 0.5
   15, 128,   0, 128,  255,   0,   0,    0, 255,   0,  NO, 0.5
   16, 128,   0, 128,  255,   0,   0,    0, 255,   0,  NO, 0.5
   17, 128,   0, 128,  255,   0,   0,    0, 255,   0,  NO, 0.5
   18, 128,   0, 128,  255,   0,   0,    0, 255,   0,  NO, 0.5
   19, 128,   0, 128,  255,   0,   0,    0, 255,   0,  NO, 0.5
   20, 128,   0, 128,  255,   0,   0,    0, 255,   0,  NO, 0.5
   22, 128,   0, 128,  255,   0,   0,    0, 255,   0,  NO, 0.5
   23, 128,   0, 128,  255,   0,   0,    0, 255,   0,  NO, 0.5
   24, 128,   0, 128,  255,   0,   0,    0, 255,   0,  NO, 0.5
   25, 128,   0, 128,  255,   0,   0,    0, 255,   0,  NO, 0.5
   26, 128,   0, 128,  255,   0,   0,    0, 255,   0,  NO, 0.5
   27, 128,   0, 128,  255,   0,   0,    0, 255,   0,  NO, 0.5
   28, 128,   0, 128,  255,   0,   0,    0, 255,   0,  NO, 0.5
   29, 128,   0, 128,  255,   0,   0,    0, 255,   0,  NO, 0.5
   30, 128,   0, 128,  255,   0,   0,    0, 255,   0,  NO, 0.5
   31, 128,   0, 128,  255,   0,   0,    0, 255,   0,  NO, 0.5
   32, 128,   0, 128,  255,   0,   0,    0, 255,   0,  NO, 0.5
   33, 128,   0, 128,  255,   0,   0,    0, 255,   0,  NO, 0.5
   34, 128,   0, 128,  255,   0,   0,    0, 255,   0,  NO, 0.5
   35, 128,   0, 128,  255,   0,   0,    0, 255,   0,  NO, 0.5
   36, 128,   0, 128,  255,   0,   0,    0, 255,   0,  NO, 0.5
   37, 128,   0, 128,  255,   0,   0,    0, 255,   0,  NO, 0.5
   38, 128,   0, 128,  255,   0,   0,    0, 255,   0,  NO, 0.5
```

```
  100, 128,   0, 128,  255,   0,   0,    0, 255,   0,  NO, 0.5
  101, 128,   0, 128,  255,   0,   0,    0, 255,   0,  NO, 0.5
  102, 128,   0, 128,  255,   0,   0,    0, 255,   0,  NO, 0.5
  103, 128,   0, 128,  255,   0,   0,    0, 255,   0,  NO, 0.5
  104, 128,   0, 128,  255,   0,   0,    0, 255,   0,  NO, 0.5
  105, 128,   0, 128,  255,   0,   0,    0, 255,   0,  NO, 0.5
  106, 128,   0, 128,  255,   0,   0,    0, 255,   0,  NO, 0.5
  107, 128,   0, 128,  255,   0,   0,    0, 255,   0,  NO, 0.5
  108, 128,   0, 128,  255,   0,   0,    0, 255,   0,  NO, 0.5
  109, 128,   0, 128,  255,   0,   0,    0, 255,   0,  NO, 0.5
  110, 128,   0, 128,  255,   0,   0,    0, 255,   0,  NO, 0.5
  111, 128,   0, 128,  255,   0,   0,    0, 255,   0,  NO, 0.5
  112, 128,   0, 128,  255,   0,   0,    0, 255,   0,  NO, 0.5
  113, 128,   0, 128,  255,   0,   0,    0, 255,   0,  NO, 0.5
  114, 128,   0, 128,  255,   0,   0,    0, 255,   0,  NO, 0.5
  115, 128,   0, 128,  255,   0,   0,    0, 255,   0,  NO, 0.5
  116, 128,   0, 128,  255,   0,   0,    0, 255,   0,  NO, 0.5
  117, 128,   0, 128,  255,   0,   0,    0, 255,   0,  NO, 0.5
  118, 128,   0, 128,  255,   0,   0,    0, 255,   0,  NO, 0.5
  119, 128,   0, 128,  255,   0,   0,    0, 255,   0,  NO, 0.5
  120, 128,   0, 128,  255,   0,   0,    0, 255,   0,  NO, 0.5
  121, 128,   0, 128,  255,   0,   0,    0, 255,   0,  NO, 0.5
  122, 128,   0, 128,  255,   0,   0,    0, 255,   0,  NO, 0.5
  700, 128,   0, 128,  255,   0,   0,    0, 255,   0,  NO, 0.5
  701, 128,   0, 128,  255,   0,   0,    0, 255,   0,  NO, 0.5
  702, 128,   0, 128,  255,   0,   0,    0, 255,   0,  NO, 0.5
  703, 128,   0, 128,  255,   0,   0,    0, 255,   0,  NO, 0.5
  704, 128,   0, 128,  255,   0,   0,    0, 255,   0,  NO, 0.5
  707, 128,   0, 128,  255,   0,   0,    0, 255,   0,  NO, 0.5
  708, 128,   0, 128,  255,   0,   0,    0, 255,   0,  NO, 0.5
  709, 128,   0, 128,  255,   0,   0,    0, 255,   0,  NO, 0.5
  710, 128,   0, 128,  255,   0,   0,    0, 255,   0,  NO, 0.5
  711, 128,   0, 128,  255,   0,   0,    0, 255,   0,  NO, 0.5
  712, 128,   0, 128,  255,   0,   0,    0, 255,   0,  NO, 0.5
 1000, 128,   0, 128,  255,   0,   0,    0, 255,   0,  NO, 0.5

*SECT-SCALE    ; Section Stiffness Scale Factor
; iSEC, AREA_SF, ASY_SF, ASZ_SF, IXX_SF, IYY_SF, IZZ_SF, WGT_SF, GROUP, iPart ; line 1
  703, 1, 100, 100, 1, 100, 100, 1, , 1
  704, 1, 1, 1, 1, 1, 1, 0.001, , 1

*DGN-SECT
; iSEC, TYPE, SNAME, [OFFSET], bSD, bWE, SHAPE, [DATA1], [DATA2]                    ;
1st line - DB/USER
; iSEC, TYPE, SNAME, [OFFSET], bSD, bWE, SHAPE, BLT, D1, ..., D8, iCEL              ;
1st line - VALUE
;       AREA, ASy, ASz, Ixx, Iyy, Izz                                               ;
2nd line
;       CyP, CyM, CzP, CzM, QyB, QzB, PERI_OUT, PERI_IN, Cy, Cz                     ;
3rd line
;       Y1, Y2, Y3, Y4, Z1, Z2, Z3, Z4, Zyy, Zzz                                    ;
4th line
; iSEC, TYPE, SNAME, [OFFSET], bSD, bWE, SHAPE, ELAST, DEN, POIS, POIC, SF, THERMAL ;
1st line - SRC
;       D1, D2, [SRC]                                                               ;
2nd line
; iSEC, TYPE, SNAME, [OFFSET], bSD, bWE, SHAPE, 1, DB, NAME1, NAME2, D1, D2         ;
1st line - COMBINED
; iSEC, TYPE, SNAME, [OFFSET], bSD, bWE, SHAPE, 2, D11, D12, D13, D14, D15, D21, D22,
D23, D24
; iSEC, TYPE, SNAME, [OFFSET2], bSD, bWE, SHAPE, iyVAR, izVAR, STYPE                ;
1st line - TAPERED
```

```
;       DB, NAME1, NAME2                                                        ;
2nd line(STYPE=DB)
;       [DIM1], [DIM2]                                                          ;
2nd line(STYPE=USER)
;       D11, D12, D13, D14, D15, D16, D17, D18                                  ;
2nd line(STYPE=VALUE)
;       AREA1, ASy1, ASz1, Ixx1, Iyy1, Izz1                                     ;
3rd line(STYPE=VALUE)
;       CyP1, CyM1, CzP1, CzM1, QyB1, QzB1, PERI_OUT1, PERI_IN1, Cy1, Cz1       ;
4th line(STYPE=VALUE)
;       Y11, Y12, Y13, Y14, Z11, Z12, Z13, Z14, Zyy1, Zyy2                      ;
5th line(STYPE=VALUE)
;       D21, D22, D23, D24, D25, D26, D27, D28                                  ;
6th line(STYPE=VALUE)
;       AREA2, ASy2, ASz2, Ixx2, Iyy2, Izz2                                     ;
7th line(STYPE=VALUE)
;       CyP2, CyM2, CzP2, CzM2, QyB2, QzB2, PERI_OUT2, PERI_IN2, Cy2, Cz2       ;
8th line(STYPE=VALUE)
;       Y21, Y22, Y23, Y24, Z21, Z22, Z23, Z24, Zyy2, Zzz2                      ;
9th line(STYPE=VALUE)
; iSEC, TYPE, SNAME, [OFFSET], bSD, bWE, SHAPE                                  ;
1st line - COMPOSITE-B
;       Hw, tw, B1, Bf1, tf1, B2, Bf2, tf2                                      ;
2nd line
;       [SHAPE-NUM], [STIFF-SHAPE], [STIFF-POS] (1~4)                           ;
3rd line
;       SW, GN, CTC, Bc, Tc, Hh, EsEc, DsDc, Ps, Pc, TsTc, bMulti, Elong, Esh   ;
4th line
; iSEC, TYPE, SNAME, [OFFSET], bSD, bWE, SHAPE                                  ;
1st line - COMPOSITE-I
;       Hw, tw, B1, tf1, B2, tf2                                                ;
2nd line
;       [SHAPE-NUM], [STIFF-SHAPE], [STIFF-POS] (1~2)                           ;
3rd line
;       SW, GN, CTC, Bc, Tc, Hh, EsEc, DsDc, Ps, Pc, TsTc, bMulti, Elong, Esh   ;
4th line
; iSEC, TYPE, SNAME, [OFFSET], bSD, bWE, SHAPE                                  ;
1st line - COMPOSITE-TUB
;       Hw, tw, B1, Bf1, tf1, B2, Bf2, tf2, Bf3, tfp                            ;
2nd line
;       [SHAPE-NUM], [STIFF-SHAPE], [STIFF-POS] (1~3)                           ;
3rd line
;       SW, GN, CTC, Bc, Tc, Hh, EsEc, DsDc, Ps, Pc, TsTc, bMulti, Elong, Esh   ;
4th line
; [DATA1] : 1, DB, NAME or 2, D1, D2, D3, D4, D5, D6, D7, D8, D9, D10
; [DATA2] : CCSHAPE or iCEL or iN1, iN2
; [SRC]  : 1, DB, NAME1, NAME2 or 2, D1, D2, D3, D4, D5, D6, D7, D8, D9, D10, iN1, iN2

; [DIM1], [DIM2] : D1, D2, D3, D4, D5, D6, D7, D8
; [OFFSET] : OFFSET, iCENT, iREF, iHORZ, HUSER, iVERT, VUSER
; [OFFSET2]: OFFSET, iCENT, iREF, iHORZ, HUSERI, HUSERJ, iVERT, VUSERI, VUSERJ
; [SHAPE-NUM]: SHAPE-NUM, POS, STIFF-NUM1, STIFF-NUM2, STIFF-NUM3, STIFF-NUM4
; [STIFF-SHAPE]: SHAPE-NUM, for(SHAPE-NUM) { NAME, SIZE1~8 }
; [STIFF-POS]: STIFF-NUM, for(STIFF-NUM) { SPACING, iSHAPE, bCALC }
    1, DBUSER    , L0_X1             , CC, 0, 0, 0, 0, 0, 0, YES, NO, SB , 2, 1.93, 0.
36, 0, 0, 0, 0, 0, 0, 0, 0
    2, DBUSER    , L0_X2             , CC, 0, 0, 0, 0, 0, 0, YES, NO, SB , 2, 0.65, 0.
36, 0, 0, 0, 0, 0, 0, 0, 0
    3, DBUSER    , L0_X2bis          , CC, 0, 0, 0, 0, 0, 0, YES, NO, SB , 2, 1.225, 0
.36, 0, 0, 0, 0, 0, 0, 0, 0
    4, DBUSER    , L0_X3             , CC, 0, 0, 0, 0, 0, 0, YES, NO, SB , 2, 1.83, 0.
36, 0, 0, 0, 0, 0, 0, 0, 0
```

```
    5, DBUSER    , L0_X4            , CC, 0, 0, 0, 0, 0, 0, YES, NO, SB , 2, 1.25, 0.
36, 0, 0, 0, 0, 0, 0, 0, 0
    6, DBUSER    , L0_X5            , CC, 0, 0, 0, 0, 0, 0, YES, NO, SB , 2, 0.47, 0.
36, 0, 0, 0, 0, 0, 0, 0, 0
    7, DBUSER    , L0_X6            , CC, 0, 0, 0, 0, 0, 0, YES, NO, SB , 2, 4.68, 0.
25, 0, 0, 0, 0, 0, 0, 0, 0
    8, DBUSER    , L0_X7            , CC, 0, 0, 0, 0, 0, 0, YES, NO, SB , 2, 1.53, 0.
25, 0, 0, 0, 0, 0, 0, 0, 0
    9, DBUSER    , L0_X8            , CC, 0, 0, 0, 0, 0, 0, YES, NO, SB , 2, 1.75, 0.
25, 0, 0, 0, 0, 0, 0, 0, 0
   10, DBUSER    , L0_X9            , CC, 0, 0, 0, 0, 0, 0, YES, NO, SB , 2, 1.33, 0.
25, 0, 0, 0, 0, 0, 0, 0, 0
   11, DBUSER    , L0_X10           , CC, 0, 0, 0, 0, 0, 0, YES, NO, SB , 2, 0.78, 0.
36, 0, 0, 0, 0, 0, 0, 0, 0
   12, DBUSER    , L0_X11           , CC, 0, 0, 0, 0, 0, 0, YES, NO, SB , 2, 2.95, 0.
36, 0, 0, 0, 0, 0, 0, 0, 0
   13, DBUSER    , L0_X12           , CC, 0, 0, 0, 0, 0, 0, YES, NO, SB , 2, 1.63, 0.
36, 0, 0, 0, 0, 0, 0, 0, 0
   14, DBUSER    , L0_X13           , CC, 0, 0, 0, 0, 0, 0, YES, NO, SB , 2, 0.75, 0.
25, 0, 0, 0, 0, 0, 0, 0, 0
   15, DBUSER    , L0_X14           , CC, 0, 0, 0, 0, 0, 0, YES, NO, SB , 2, 4.47, 0.
25, 0, 0, 0, 0, 0, 0, 0, 0
   16, DBUSER    , L0_X15           , CC, 0, 0, 0, 0, 0, 0, YES, NO, SB , 2, 4.83, 0.
25, 0, 0, 0, 0, 0, 0, 0, 0
   17, DBUSER    , L0_X16           , CC, 0, 0, 0, 0, 0, 0, YES, NO, SB , 2, 0.3, 0.3
6, 0, 0, 0, 0, 0, 0, 0, 0
   18, DBUSER    , L0_X17           , CC, 0, 0, 0, 0, 0, 0, YES, NO, SB , 2, 0.5, 0.3
6, 0, 0, 0, 0, 0, 0, 0, 0
   19, DBUSER    , L0_X18           , CC, 0, 0, 0, 0, 0, 0, YES, NO, SB , 2, 0.65, 0.
36, 0, 0, 0, 0, 0, 0, 0, 0
   20, DBUSER    , catene           , CC, 0, 0, 0, 0, 0, 0, YES, NO, SR , 2, 0.024, 0
, 0, 0, 0, 0, 0, 0, 0, 0
   22, DBUSER    , L0_X21           , CC, 0, 0, 0, 0, 0, 0, YES, NO, SB , 2, 3.68, 0.
25, 0, 0, 0, 0, 0, 0, 0, 0
   23, DBUSER    , L0_X22           , CC, 0, 0, 0, 0, 0, 0, YES, NO, SB , 2, 1.6, 0.2
5, 0, 0, 0, 0, 0, 0, 0, 0
   24, DBUSER    , L0_X23           , CC, 0, 0, 0, 0, 0, 0, YES, NO, SB , 2, 3.77, 0.
25, 0, 0, 0, 0, 0, 0, 0, 0
   25, DBUSER    , L0_X24           , CC, 0, 0, 0, 0, 0, 0, YES, NO, SB , 2, 0.95, 0.
25, 0, 0, 0, 0, 0, 0, 0, 0
   26, DBUSER    , L0_X25           , CC, 0, 0, 0, 0, 0, 0, YES, NO, SB , 2, 6.45, 0.
25, 0, 0, 0, 0, 0, 0, 0, 0
   27, DBUSER    , L0_X26           , CC, 0, 0, 0, 0, 0, 0, YES, NO, SB , 2, 4.83, 0.
25, 0, 0, 0, 0, 0, 0, 0, 0
   28, DBUSER    , L0_X27           , CC, 0, 0, 0, 0, 0, 0, YES, NO, SB , 2, 0.97, 0.
36, 0, 0, 0, 0, 0, 0, 0, 0
   29, DBUSER    , L0_X28           , CC, 0, 0, 0, 0, 0, 0, YES, NO, SB , 2, 1.19, 0.
36, 0, 0, 0, 0, 0, 0, 0, 0
   30, DBUSER    , L0_X29           , CC, 0, 0, 0, 0, 0, 0, YES, NO, SB , 2, 1, 0.36,
 0, 0, 0, 0, 0, 0, 0, 0
   31, DBUSER    , L0_X30           , CC, 0, 0, 0, 0, 0, 0, YES, NO, SB , 2, 0.29, 0.
36, 0, 0, 0, 0, 0, 0, 0, 0
   32, DBUSER    , L0_X31           , CC, 0, 0, 0, 0, 0, 0, YES, NO, SB , 2, 0.19, 0.
36, 0, 0, 0, 0, 0, 0, 0, 0
   33, DBUSER    , L0_X32           , CC, 0, 0, 0, 0, 0, 0, YES, NO, SB , 2, 0.29, 0.
36, 0, 0, 0, 0, 0, 0, 0, 0
   34, DBUSER    , L0_X33           , CC, 0, 0, 0, 0, 0, 0, YES, NO, SB , 2, 1.29, 0.
36, 0, 0, 0, 0, 0, 0, 0, 0
   35, DBUSER    , L0_X33bis        , CC, 0, 0, 0, 0, 0, 0, YES, NO, SB , 2, 0.95, 0.
36, 0, 0, 0, 0, 0, 0, 0, 0
   36, DBUSER    , L0_X34           , CC, 0, 0, 0, 0, 0, 0, YES, NO, SB , 2, 1.55, 0.
36, 0, 0, 0, 0, 0, 0, 0, 0
```

```
   37, DBUSER    , L0_X35            , CC, 0, 0, 0, 0, 0, 0, YES, NO, SB , 2, 6.35, 0.
36, 0, 0, 0, 0, 0, 0, 0, 0
   38, DBUSER    , L0_X22bis         , CC, 0, 0, 0, 0, 0, 0, YES, NO, SB , 2, 1.28, 0.
25, 0, 0, 0, 0, 0, 0, 0, 0
  100, DBUSER    , L0_Y01            , CC, 0, 0, 0, 0, 0, 0, YES, NO, SB , 2, 7.4, 0.3
6, 0, 0, 0, 0, 0, 0, 0, 0
  101, DBUSER    , L0_Y02            , CC, 0, 0, 0, 0, 0, 0, YES, NO, SB , 2, 1.62, 0.
25, 0, 0, 0, 0, 0, 0, 0, 0
  102, DBUSER    , L0_Y02bis         , CC, 0, 0, 0, 0, 0, 0, YES, NO, SB , 2, 2.18, 0.
39, 0, 0, 0, 0, 0, 0, 0, 0
  103, DBUSER    , L0_Y02tris        , CC, 0, 0, 0, 0, 0, 0, YES, NO, SB , 2, 3.55, 0.
25, 0, 0, 0, 0, 0, 0, 0, 0
  104, DBUSER    , L0_Y03            , CC, 0, 0, 0, 0, 0, 0, YES, NO, SB , 2, 1.54, 0.
36, 0, 0, 0, 0, 0, 0, 0, 0
  105, DBUSER    , L0_Y04            , CC, 0, 0, 0, 0, 0, 0, YES, NO, SB , 2, 1.2, 0.3
6, 0, 0, 0, 0, 0, 0, 0, 0
  106, DBUSER    , L0_Y04bis         , CC, 0, 0, 0, 0, 0, 0, YES, NO, SB , 2, 0.59, 0.
36, 0, 0, 0, 0, 0, 0, 0, 0
  107, DBUSER    , L0_Y05            , CC, 0, 0, 0, 0, 0, 0, YES, NO, SB , 2, 1.25, 0.
25, 0, 0, 0, 0, 0, 0, 0, 0
  108, DBUSER    , L0_Y06            , CC, 0, 0, 0, 0, 0, 0, YES, NO, SB , 2, 1.15, 0.
36, 0, 0, 0, 0, 0, 0, 0, 0
  109, DBUSER    , L0_Y07            , CC, 0, 0, 0, 0, 0, 0, YES, NO, SB , 2, 1.18, 0.
25, 0, 0, 0, 0, 0, 0, 0, 0
  110, DBUSER    , L0_Y08            , CC, 0, 0, 0, 0, 0, 0, YES, NO, SB , 2, 2.75, 0.
36, 0, 0, 0, 0, 0, 0, 0, 0
  111, DBUSER    , L0_Y09            , CC, 0, 0, 0, 0, 0, 0, YES, NO, SB , 2, 6.43, 0.
39, 0, 0, 0, 0, 0, 0, 0, 0
  112, DBUSER    , L0_Y10            , CC, 0, 0, 0, 0, 0, 0, YES, NO, SB , 2, 6.43, 0.
25, 0, 0, 0, 0, 0, 0, 0, 0
  113, DBUSER    , L0_Y11            , CC, 0, 0, 0, 0, 0, 0, YES, NO, SB , 2, 6.43, 0.
36, 0, 0, 0, 0, 0, 0, 0, 0
  114, DBUSER    , L0_Y12            , CC, 0, 0, 0, 0, 0, 0, YES, NO, SB , 2, 0.84, 0.
36, 0, 0, 0, 0, 0, 0, 0, 0
  115, DBUSER    , L0 Y13            , CC, 0, 0, 0, 0, 0, 0, YES, NO, SB , 2, 0.83, 0.
25, 0, 0, 0, 0, 0, 0, 0, 0
  116, DBUSER    , L0_Y14            , CC, 0, 0, 0, 0, 0, 0, YES, NO, SB , 2, 2.55, 0.
36, 0, 0, 0, 0, 0, 0, 0, 0
  117, DBUSER    , L0_Y14bis         , CC, 0, 0, 0, 0, 0, 0, YES, NO, SB , 2, 4.11, 0.
39, 0, 0, 0, 0, 0, 0, 0, 0
  118, DBUSER    , L0 Y15            , CC, 0, 0, 0, 0, 0, 0, YES, NO, SB , 2, 1.37, 0.
36, 0, 0, 0, 0, 0, 0, 0, 0
  119, DBUSER    , L0_Y16            , CC, 0, 0, 0, 0, 0, 0, YES, NO, SB , 2, 5.61, 0.
36, 0, 0, 0, 0, 0, 0, 0, 0
  120, DBUSER    , L0_Y17            , CC, 0, 0, 0, 0, 0, 0, YES, NO, SB , 2, 4.69, 0.
39, 0, 0, 0, 0, 0, 0, 0, 0
  121, DBUSER    , L0_Y17bis         , CC, 0, 0, 0, 0, 0, 0, YES, NO, SB , 2, 1.35, 0.
39, 0, 0, 0, 0, 0, 0, 0, 0
  122, DBUSER    , L0_Y18            , CC, 0, 0, 0, 0, 0, 0, YES, NO, SB , 2, 1.79, 0.
36, 0, 0, 0, 0, 0, 0, 0, 0
  700, DBUSER    , Pilastro fitt     , CC, 0, 0, 0, 0, 0, 0, YES, NO, SB , 2, 0.248, 0
.248, 0, 0, 0, 0, 0, 0, 0, 0
  701, DBUSER    , cordolo 40x21     , CC, 0, 0, 0, 0, 0, 0, YES, NO, SB , 2, 0.21, 0.
4, 0, 0, 0, 0, 0, 0, 0, 0
  702, DBUSER    , cordolo 30x21     , CC, 0, 0, 0, 0, 0, 0, YES, NO, SB , 2, 0.21, 0.
3, 0, 0, 0, 0, 0, 0, 0, 0
  703, DBUSER    , cordolo RIGID     , CC, 0, 0, 0, 0, 0, 0, YES, NO, SB , 2, 0.2, 0.4
, 0, 0, 0, 0, 0, 0, 0, 0
  704, DBUSER    , cordolo fitt      , CC, 0, 0, 0, 0, 0, 0, YES, NO, SB , 2, 0.2, 0.2
5, 0, 0, 0, 0, 0, 0, 0, 0
  707, DBUSER    , Pilastro          , CC, 0, 0, 0, 0, 0, 0, YES, NO, SB , 2, 0.37, 0.
37, 0, 0, 0, 0, 0, 0, 0, 0
```

```
  708, DBUSER    , Trave              , CC, 0, 0, 0, 0, 0, 0, YES, NO, SB , 2, 0.25, 0.
55, 0, 0, 0, 0, 0, 0, 0, 0
  709, DBUSER    , Fascia 0.60x0.36  , CC, 0, 0, 0, 0, 0, 0, YES, NO, SB , 2, 0.6, 0.3
6, 0, 0, 0, 0, 0, 0, 0, 0
  710, DBUSER    , Fascia 1.45x0.25  , CC, 0, 0, 0, 0, 0, 0, YES, NO, SB , 2, 1.45, 0.
25, 0, 0, 0, 0, 0, 0, 0, 0
  711, DBUSER    , Fascia 0.95x0.25  , CC, 0, 0, 0, 0, 0, 0, YES, NO, SB , 2, 0.95, 0.
25, 0, 0, 0, 0, 0, 0, 0, 0
  712, DBUSER    , Fascia 0.45x0.36  , CC, 0, 0, 0, 0, 0, 0, YES, NO, SB , 2, 0.45, 0.
36, 0, 0, 0, 0, 0, 0, 0, 0
 1000, DBUSER    , LINE              , CC, 0, 0, 0, 0, 0, 0, YES, NO, SB , 2, 0.01, 0.
01, 0, 0, 0, 0, 0, 0, 0, 0

*STLDCASE    ; Static Load Cases
; LCNAME, LCTYPE, DESC
   PP   , D ,
   G1+G2 copertura A, D ,
   G1+G2 copertura B, D ,
   Q sottotetto, L ,
   sporto gronda, D ,
   Q neve, L ,
   SISMA X, E ,
   SISMA Y, E ,
   travi, D ,
   parapetto, D ,
   muro , D ,


*STORY    ; Story
;  NAME=NAME, LEVEL, bFLDIAP, WINDWX, WINDWY, WINDCX, WINDCY, ECCX, ECCY, IECCX, IECCY
, TAFX, TAFY, WTAFX, WTAFY, AreaPosNum ; line 1
;       AreaPosX1, AreaPosY1, AreaPosZ1, ...
                                        ; from line 2
   NAME=1F, -1, NO , 28.35, 18.4112, 15.575, 19.1056, 1.4175, 0.920562, 0, 0, 1, 1, 4.
2525, 2.76169, 0
   NAME=Roof, 3.35, YES, 28.35, 18.4112, 15.575, 19.1056, 1.4175, 0.920562, 0, 0, 1, 1
, 4.2525, 2.76169, 0

*STORY-CHANGED-INFO    ; Story Changed Information
; iCHANGEDINFO
 0

*STORY-ECCEN    ; Story Eccentricity
; bIncludeEccSeis, bIncludeEccWind, EccSeis, EccWind
 YES, YES, 5, 15

*DGN-CONC    ; Concrete Design Code
; CODE=CODE, RHOC, RHOR, RHOW, MRF, SHR-RATIO { , METHOD, A1, A2, A2_COLM, bSCWB }
 ; line 1
; [ACI318-89]     : bSPECIAL, PHI-B, PHI-T, PHIC1, PHI-C2, PHI-V
 ; line 2
; [ACI318-95]     : bSPECIAL, PHI-B, PHI-T, PHIC1, PHI-C2, PHI-V
 ; line 2
; [ACI318-99]     : bSPECIAL, PHI-B, PHI-T, PHIC1, PHI-C2, PHI-V
 ; line 2
; [ACI318-02]     : bSPECIAL, PHI-B, PHI-T, PHIC1, PHI-C2, PHI-V, TLF, SLF, TSLCB
 ; line 2
; [ACI318-05]     : bSPECIAL, PHI-B, PHI-T, PHIC1, PHI-C2, PHI-V, TLF, SLF, TSLCB
 ; line 2
; [ACI318-08]     : bSPECIAL, PHI-B, PHI-T, PHIC1, PHI-C2, PHI-V, TLF, SLF, TSLCB, SPW
ALL, BNDR-MTHD, CD, IE, FRMTYPE, 2NDGRUP, RHOS, bTOR, TRFT; line 2
; [ACI318-11]     : bCHEKCBEAM, bSPECIAL, PHI-B, PHI-T, PHIC1, PHI-C2, PHI-V, TLF, SLF
```

```
, TSLCB, SPWALL, BNDR-MTHD, CD, IE, FRMTYPE, 2NDGRUP, RHOS, bTOR, TRFT; line 2
; [ACI318-14]      : bCHEKCBEAM, bSPECIAL, PHI-B, PHI-T, PHIC1, PHI-C2, PHI-V, TLF, SLF
, TSLCB, SPWALL, BNDR-MTHD, CD, IE, FRMTYPE, 2NDGRUP, RHOS, bTOR, TRFT, bBC-JOINT; lin
e 2
; [ACI318M-14]     : bCHEKCBEAM, bSPECIAL, PHI-B, PHI-T, PHIC1, PHI-C2, PHI-V, TLF, SLF
, TSLCB, SPWALL, BNDR-MTHD, CD, IE, FRMTYPE, 2NDGRUP, RHOS, bTOR, TRFT, bBC-JOINT; lin
e 2
; [NSR-10]         : bCHEKCBEAM, bSPECIAL, PHI-B, PHI-T, PHIC1, PHI-C2, PHI-V, TLF, SLF
, TSLCB, SPWALL, BNDR-MTHD, CD, IE, FRMTYPE, 2NDGRUP, RHOS, bBC-JOINT; line 2
; [AIK-USD94]      : bSPECIAL, PHI-B, PHI-T, PHIC1, PHI-C2, PHI-V
 ; line 2
; [TWN-USD92]      : bSPECIAL, PHI-B, PHI-T, PHIC1, PHI-C2, PHI-V, bTOR, TRFT, SCWB
 ; line 2
; [TWN-USD100]     : bSPECIAL, PHI-B, PHI-T, PHIC1, PHI-C2, PHI-V, bTOR, TRFT, SCWB
 ; line 2
; [KCI-USD99]      : bSPECIAL, PHI-B, PHI-T, PHIC1, PHI-C2, PHI-V, TLF, SLF, TSLCB
 ; line 2
; [KCI-USD03]      : bSPECIAL, PHI-B, PHI-T, PHIC1, PHI-C2, PHI-V, TLF, SLF, TSLCB
 ; line 2
; [KCI-USD07]      : bSPECIAL, PHI-B, PHI-T, PHIC1, PHI-C2, PHI-V, TLF, SLF, TSLCB, SPW
ALL, BNDR-MTHD, CD, IE, FRMTYPE, 2NDGRUP, bTOR, TRFT; line 2
; [KCI-USD12]      : bSPECIAL, PHI-B, PHI-T, PHIC1, PHI-C2, PHI-V, TLF, SLF, TSLCB, SPW
ALL, BNDR-MTHD, CD, IE, EXPOSURE, FRMTYPE, 2NDGRUP, bTOR, TRFT; line 2
; [BS8110-97]      : GAMMA-MC, GAMMA-MS, GAMMA-MV
 ; line 2
; [EUROCODE2]      : GAMMA-CF, GAMMA-CA, GAMMA-SF, GAMMA-SA, iSCODE
 ; line 2
; [EUROCODE2:04]   : GAMMA-CF, GAMMA-CA, GAMMA-SF, GAMMA-SA, ALPHACC, iSCODE,
 ; line 2
;                    bRULE, WEAK-FACT, iDUC, GAMMA-RD-B, GAMMA-RD-C, S-GRUP
 ; line 2
;                    FRAMETYPE, AUA1, SPLCK, SOILFACTOR, TB, TC, TD, AGR, I, DAMPINGRAT
, BCJOINT, NTC2008, UF, GAMMA-RD-W, GAMMA-RD-J ; line 2
;                    STRUT-ANG, bBEHAVIOR-FACT, BEHAVIOR-FACT-VALUE, iNTC, bVCWALL, bVC
COLM, dPHIEF, bAUTOA, bAUTOC, A, B, C, bTOR    ; line 2
;                    bSHELL, dSHELLHORIZ, DSHELLVERT    ; line 2
; [EUROCODE2-2:05]: GAMMA-CF, GAMMA-CA, GAMMA-SF, GAMMA-SA, GAMMA_CL, GAMMA_SL, ALPHAC
C, iSCODE, STRUT-ANG,; line 2
;                    bSHELL, dSHELLHORIZ, DSHELLVERT    ; line 2
; [IS456:2000]     : bSPECIAL, GAMMA-C, GAMMA-S, FOS, SubRex
 ; line 2
; [GB50010-02]     : bSPECIAL, GAMMA-C, GAMMA-S, KIND, iSlabType
 ; line 2
; [GB50010-10]     : bSPECIAL, GAMMA-C, GAMMA-S, KIND, iSlabType, bTOR, TRFT
 ; line 2
; [CSA-A23.3-94]   : bSPECIAL, PHI-C, PHI-S, PHI-M
 ; line 2
; [AIK-WSD2K]      : bSPECIAL
 ; line 2
; [AIJ-WSD99]      : bSPECIAL, KIND
 ; line 2
; [AASHTO-LRFD12] : bSPECIAL, PHI-B, PHI-T, PHI-C1, PHI-C2, PHI-V, KIND
 ; line 2
; [AASHTO-LRFD02] : bSPECIAL, PHI-B, PHI-T, PHI-C1, PHI-C2, PHI-V, KIND
 ; line 2
; [AASHTO-LFD96]  : bSPECIAL, PHI-B, PHI-T, PHI-C1, PHI-C2, PHI-V
 ; line 2
; [KSCE-USD05]     : bSPECIAL, PHI-B, PHI-T, PHI-C1, PHI-C2, PHI-V
 ; line 2
; [KSCE-USD96]     : bSPECIAL, PHI-B, PHI-T, PHI-C1, PHI-C2, PHI-V
 ; line 2
; [KSCE-RAIL-USE04] : bSPECIAL, PHI-B, PHI-T, PHI-C1, PHI-C2, PHI-V
```

```
 ; line 2
; [TWN-BRG-LSD90] : bSPECIAL, PHI-B, PHI-T, PHI-C1, PHI-C2, PHI-V
 ; line 2
; [JTJ023-85]     : GAMMA-C, GAMMA-S, KIND
 ; line 2
; [CSA-S6-00]     : bSPECIAL, PHI-C, PHI-S, KIND
 ; line 2
; [CSA-S6-14]     : bSPECIAL, PHI-C, PHI-S, KIND
 ; line 2
; [IRC:21-2000]   : GAMMA-C, GAMMA-S
 ; line 2
; [SNiP 2.05.03-84*]  : nBRIDGE, bmb7mb8, mb7mb8Type, mb7, mb8, bmb9, mb9Type, mb9
 ; line 2
; [SP 35.13330.2011]  : nBRIDGE, bmb7mb8, mb7mb8Type, mb7, mb8, bmb9, mb9Type, mb9
 ; line 2
; Member Check    : bBEAM, bCOLM, bBRCE, bWALL, bSLAB, bMAT, bRBEAM, bRCOLM, bRBRCE, b
RWALL, bRSLAB, bRMAT, bSBEAM, bCANTIL, bUNDER-BM/COLM
   CODE=Eurocode2:04, 0, 0, 0, 1, 0, , , , ,
   1.5, 1.2, 1.15, 1, 0.85, 0, NO, 1.3, 0, 1.2, 1.3, , 0, 1.1, 0, 1.2, 0.15, 0.5, 2, 0
.08, 1, 5, NO, 0, YES, 0.6, 1.2, 1.2, 45, NO, 1.5, 2, NO, NO, 2.14, NO, YES, 0.7, 1.1,
 1, NO, NO, 0, 0
   YES, YES, YES, YES, YES, YES, YES, YES, YES, YES, YES, YES, YES, YES, YES, 0

*CONSTRAINT    ; Supports
; NODE_LIST, CONST(Dx,Dy,Dz,Rx,Ry,Rz), GROUP
   1 15 18 24 65to67 69 73 75 78 80 81 85 86 102 115 120to122 132 134 , 111111,
   135 139 142to175by11 144to151 169to173 177 193 376 379 396 461 463 , 111111,
   464, 111111,

*FRAME-RLS    ; Beam End Release
; ELEM_LIST, bVALUE, FLAG-i, Fxi, Fyi, Fzi, Mxi, Myi, Mzi        ; 1st line
;                    FLAG-j, Fxj, Fyj, Fzj, Mxj, Myj, Mzj, GROUP ; 2nd line
     9,  NO, 000001, 0, 0, 0, 0, 0, 0
             000000, 0, 0, 0, 0, 0, 0,
    10,  NO, 000001, 0, 0, 0, 0, 0, 0
             000000, 0, 0, 0, 0, 0, 0,
    12,  NO, 000001, 0, 0, 0, 0, 0, 0
             000000, 0, 0, 0, 0, 0, 0,
    18,  NO, 000001, 0, 0, 0, 0, 0, 0
             000000, 0, 0, 0, 0, 0, 0,
    24,  NO, 000001, 0, 0, 0, 0, 0, 0
             000000, 0, 0, 0, 0, 0, 0,
    26,  NO, 000001, 0, 0, 0, 0, 0, 0
             000000, 0, 0, 0, 0, 0, 0,
    27,  NO, 000001, 0, 0, 0, 0, 0, 0
             000000, 0, 0, 0, 0, 0, 0,
    30,  NO, 000001, 0, 0, 0, 0, 0, 0
             000000, 0, 0, 0, 0, 0, 0,
    33,  NO, 000001, 0, 0, 0, 0, 0, 0
             000000, 0, 0, 0, 0, 0, 0,
    34,  NO, 000001, 0, 0, 0, 0, 0, 0
             000000, 0, 0, 0, 0, 0, 0,
    39,  NO, 000001, 0, 0, 0, 0, 0, 0
             000000, 0, 0, 0, 0, 0, 0,
    40,  NO, 000001, 0, 0, 0, 0, 0, 0
             000000, 0, 0, 0, 0, 0, 0,
    41,  NO, 000001, 0, 0, 0, 0, 0, 0
             000000, 0, 0, 0, 0, 0, 0,
    42,  NO, 000001, 0, 0, 0, 0, 0, 0
             000000, 0, 0, 0, 0, 0, 0,
    43,  NO, 000001, 0, 0, 0, 0, 0, 0
             000000, 0, 0, 0, 0, 0, 0,
```

```
   44,  NO, 000001, 0, 0, 0, 0, 0, 0
            000000, 0, 0, 0, 0, 0, 0,
   45,  NO, 000001, 0, 0, 0, 0, 0, 0
            000000, 0, 0, 0, 0, 0, 0,
   46,  NO, 000001, 0, 0, 0, 0, 0, 0
            000000, 0, 0, 0, 0, 0, 0,
   47,  NO, 000001, 0, 0, 0, 0, 0, 0
            000000, 0, 0, 0, 0, 0, 0,
   48,  NO, 000001, 0, 0, 0, 0, 0, 0
            000000, 0, 0, 0, 0, 0, 0,
   49,  NO, 000001, 0, 0, 0, 0, 0, 0
            000000, 0, 0, 0, 0, 0, 0,
   50,  NO, 000001, 0, 0, 0, 0, 0, 0
            000000, 0, 0, 0, 0, 0, 0,
   51,  NO, 000001, 0, 0, 0, 0, 0, 0
            000000, 0, 0, 0, 0, 0, 0,
   52,  NO, 000001, 0, 0, 0, 0, 0, 0
            000000, 0, 0, 0, 0, 0, 0,
   53,  NO, 000001, 0, 0, 0, 0, 0, 0
            000000, 0, 0, 0, 0, 0, 0,
   54,  NO, 000001, 0, 0, 0, 0, 0, 0
            000000, 0, 0, 0, 0, 0, 0,
   55,  NO, 000011, 0, 0, 0, 0, 0, 0
            000011, 0, 0, 0, 0, 0, 0,
   56,  NO, 000001, 0, 0, 0, 0, 0, 0
            000000, 0, 0, 0, 0, 0, 0,
   57,  NO, 000001, 0, 0, 0, 0, 0, 0
            000000, 0, 0, 0, 0, 0, 0,
   58,  NO, 000001, 0, 0, 0, 0, 0, 0
            000000, 0, 0, 0, 0, 0, 0,
   59,  NO, 000001, 0, 0, 0, 0, 0, 0
            000000, 0, 0, 0, 0, 0, 0,
   60,  NO, 000001, 0, 0, 0, 0, 0, 0
            000000, 0, 0, 0, 0, 0, 0,
   61,  NO, 000001, 0, 0, 0, 0, 0, 0
            000000, 0, 0, 0, 0, 0, 0,
   62,  NO, 000001, 0, 0, 0, 0, 0, 0
            000000, 0, 0, 0, 0, 0, 0,
 2001,  NO, 000011, 0, 0, 0, 0, 0, 0
            000000, 0, 0, 0, 0, 0, 0,
 2002,  NO, 000011, 0, 0, 0, 0, 0, 0
            000000, 0, 0, 0, 0, 0, 0,
 2003,  NO, 000011, 0, 0, 0, 0, 0, 0
            000000, 0, 0, 0, 0, 0, 0,
 2006,  NO, 000011, 0, 0, 0, 0, 0, 0
            000011, 0, 0, 0, 0, 0, 0,
 2007,  NO, 000011, 0, 0, 0, 0, 0, 0
            000011, 0, 0, 0, 0, 0, 0,
 2009,  NO, 000011, 0, 0, 0, 0, 0, 0
            000011, 0, 0, 0, 0, 0, 0,
 2010,  NO, 000011, 0, 0, 0, 0, 0, 0
            000011, 0, 0, 0, 0, 0, 0,
 2013,  NO, 000011, 0, 0, 0, 0, 0, 0
            000011, 0, 0, 0, 0, 0, 0,
 2014,  NO, 000011, 0, 0, 0, 0, 0, 0
            000011, 0, 0, 0, 0, 0, 0,
 2015,  NO, 000011, 0, 0, 0, 0, 0, 0
            000011, 0, 0, 0, 0, 0, 0,
 2016,  NO, 000011, 0, 0, 0, 0, 0, 0
            000011, 0, 0, 0, 0, 0, 0,
 2017,  NO, 000011, 0, 0, 0, 0, 0, 0
            000011, 0, 0, 0, 0, 0, 0,
```

```
2018,  NO, 000011, 0, 0, 0, 0, 0, 0
           000011, 0, 0, 0, 0, 0, 0,
6025,  NO, 000010, 0, 0, 0, 0, 0, 0
           000010, 0, 0, 0, 0, 0, 0,
6027,  NO, 000010, 0, 0, 0, 0, 0, 0
           000010, 0, 0, 0, 0, 0, 0,
6028,  NO, 000010, 0, 0, 0, 0, 0, 0
           000011, 0, 0, 0, 0, 0, 0,
6032,  NO, 000010, 0, 0, 0, 0, 0, 0
           000000, 0, 0, 0, 0, 0, 0,
6033,  NO, 000010, 0, 0, 0, 0, 0, 0
           000010, 0, 0, 0, 0, 0, 0,
6034,  NO, 000011, 0, 0, 0, 0, 0, 0
           000010, 0, 0, 0, 0, 0, 0,
6045,  NO, 000000, 0, 0, 0, 0, 0, 0
           000010, 0, 0, 0, 0, 0, 0,
6047,  NO, 000010, 0, 0, 0, 0, 0, 0
           000010, 0, 0, 0, 0, 0, 0,
6048,  NO, 000010, 0, 0, 0, 0, 0, 0
           000011, 0, 0, 0, 0, 0, 0,
6049,  NO, 000010, 0, 0, 0, 0, 0, 0
           000010, 0, 0, 0, 0, 0, 0,
6050,  NO, 000010, 0, 0, 0, 0, 0, 0
           000010, 0, 0, 0, 0, 0, 0,
6051,  NO, 000010, 0, 0, 0, 0, 0, 0
           000010, 0, 0, 0, 0, 0, 0,
6052,  NO, 000010, 0, 0, 0, 0, 0, 0
           000010, 0, 0, 0, 0, 0, 0,
6053,  NO, 000010, 0, 0, 0, 0, 0, 0
           000010, 0, 0, 0, 0, 0, 0,
6054,  NO, 000010, 0, 0, 0, 0, 0, 0
           000010, 0, 0, 0, 0, 0, 0,
6055,  NO, 000010, 0, 0, 0, 0, 0, 0
           000010, 0, 0, 0, 0, 0, 0,
6056,  NO, 000010, 0, 0, 0, 0, 0, 0
           000010, 0, 0, 0, 0, 0, 0,
6058,  NO, 000010, 0, 0, 0, 0, 0, 0
           000010, 0, 0, 0, 0, 0, 0,
6059,  NO, 000010, 0, 0, 0, 0, 0, 0
           000011, 0, 0, 0, 0, 0, 0,
6060,  NO, 000010, 0, 0, 0, 0, 0, 0
           000010, 0, 0, 0, 0, 0, 0,
6061,  NO, 000010, 0, 0, 0, 0, 0, 0
           000010, 0, 0, 0, 0, 0, 0,
6062,  NO, 000010, 0, 0, 0, 0, 0, 0
           000010, 0, 0, 0, 0, 0, 0,
6063,  NO, 000010, 0, 0, 0, 0, 0, 0
           000010, 0, 0, 0, 0, 0, 0,
6066,  NO, 000010, 0, 0, 0, 0, 0, 0
           000010, 0, 0, 0, 0, 0, 0,
6067,  NO, 000010, 0, 0, 0, 0, 0, 0
           000010, 0, 0, 0, 0, 0, 0,
6070,  NO, 000010, 0, 0, 0, 0, 0, 0
           000010, 0, 0, 0, 0, 0, 0,
6071,  NO, 000010, 0, 0, 0, 0, 0, 0
           000010, 0, 0, 0, 0, 0, 0,
6072,  NO, 000010, 0, 0, 0, 0, 0, 0
           000000, 0, 0, 0, 0, 0, 0,
6073,  NO, 000000, 0, 0, 0, 0, 0, 0
           000010, 0, 0, 0, 0, 0, 0,
6074,  NO, 000010, 0, 0, 0, 0, 0, 0
           000000, 0, 0, 0, 0, 0, 0,
```

```
6075,  NO, 000000, 0, 0, 0, 0, 0, 0
           000010, 0, 0, 0, 0, 0, 0,
6076,  NO, 000010, 0, 0, 0, 0, 0, 0
           000010, 0, 0, 0, 0, 0, 0,
6077,  NO, 000010, 0, 0, 0, 0, 0, 0
           000010, 0, 0, 0, 0, 0, 0,
6078,  NO, 000010, 0, 0, 0, 0, 0, 0
           000010, 0, 0, 0, 0, 0, 0,
6079,  NO, 000010, 0, 0, 0, 0, 0, 0
           000010, 0, 0, 0, 0, 0, 0,
6080,  NO, 000010, 0, 0, 0, 0, 0, 0
           000010, 0, 0, 0, 0, 0, 0,
6081,  NO, 000010, 0, 0, 0, 0, 0, 0
           000010, 0, 0, 0, 0, 0, 0,
6082,  NO, 000010, 0, 0, 0, 0, 0, 0
           000011, 0, 0, 0, 0, 0, 0,
6083,  NO, 000010, 0, 0, 0, 0, 0, 0
           000010, 0, 0, 0, 0, 0, 0,
6084,  NO, 000010, 0, 0, 0, 0, 0, 0
           000011, 0, 0, 0, 0, 0, 0,
6085,  NO, 000010, 0, 0, 0, 0, 0, 0
           000011, 0, 0, 0, 0, 0, 0,
6086,  NO, 000010, 0, 0, 0, 0, 0, 0
           000010, 0, 0, 0, 0, 0, 0,
6087,  NO, 000010, 0, 0, 0, 0, 0, 0
           000010, 0, 0, 0, 0, 0, 0,
6088,  NO, 000011, 0, 0, 0, 0, 0, 0
           000010, 0, 0, 0, 0, 0, 0,
6089,  NO, 000010, 0, 0, 0, 0, 0, 0
           000010, 0, 0, 0, 0, 0, 0,
6090,  NO, 000010, 0, 0, 0, 0, 0, 0
           000010, 0, 0, 0, 0, 0, 0,
6091,  NO, 000010, 0, 0, 0, 0, 0, 0
           000010, 0, 0, 0, 0, 0, 0,
6092,  NO, 000010, 0, 0, 0, 0, 0, 0
           000010, 0, 0, 0, 0, 0, 0,
6093,  NO, 000010, 0, 0, 0, 0, 0, 0
           000010, 0, 0, 0, 0, 0, 0,
6094,  NO, 000010, 0, 0, 0, 0, 0, 0
           000010, 0, 0, 0, 0, 0, 0,
6095,  NO, 000010, 0, 0, 0, 0, 0, 0
           000010, 0, 0, 0, 0, 0, 0,
6096,  NO, 000010, 0, 0, 0, 0, 0, 0
           000010, 0, 0, 0, 0, 0, 0,
6097,  NO, 000010, 0, 0, 0, 0, 0, 0
           000011, 0, 0, 0, 0, 0, 0,
6109,  NO, 000010, 0, 0, 0, 0, 0, 0
           000010, 0, 0, 0, 0, 0, 0,
6110,  NO, 000010, 0, 0, 0, 0, 0, 0
           000010, 0, 0, 0, 0, 0, 0,
6111,  NO, 000001, 0, 0, 0, 0, 0, 0
           000000, 0, 0, 0, 0, 0, 0,
6112,  NO, 000010, 0, 0, 0, 0, 0, 0
           000010, 0, 0, 0, 0, 0, 0,
6113,  NO, 000001, 0, 0, 0, 0, 0, 0
           000000, 0, 0, 0, 0, 0, 0,
6137,  NO, 000000, 0, 0, 0, 0, 0, 0
           000011, 0, 0, 0, 0, 0, 0,
6224,  NO, 000000, 0, 0, 0, 0, 0, 0
           000011, 0, 0, 0, 0, 0, 0,
6232,  NO, 000000, 0, 0, 0, 0, 0, 0
           000011, 0, 0, 0, 0, 0, 0,
```

```
  6295,  NO, 000011, 0, 0, 0, 0, 0, 0
             000011, 0, 0, 0, 0, 0, 0,

*NODALMASS    ; Nodal Masses
; NODE_LIST, mX, mY, mZ, rmX, rmY, rmZ
   189 194 200 209 242, 0, 1.958, 0, 0, 0, 0
   138 140 252 377 397, 1.958, 0, 0, 0, 0, 0

*LOADTOMASS    ; Load to Mass
; DIR, bNODAL, bBEAM, bFLOOR, bPRES, GRAV
; LCNAME1, FACTOR1, LCNAME2, FACTOR2, ...   ; from line 1
   XY, YES, YES, YES, YES, 9.806
   PP, 1, G1+G2 copertura A, 3.7, Q sottotetto, 0.3, sporto gronda, 2, travi, 3
   parapetto, 1.5, muro, 4.6

*USE-STLD, PP

*SELFWEIGHT    ; Self Weight
; X, Y, Z, GROUP
0, 0, -1,

; End of data for load case [PP] -------------------------

*USE-STLD, G1+G2 copertura A

*BEAMLOAD    ; Element Beam Loads
; ELEM_LIST, CMD, TYPE, DIR, bPROJ, [ECCEN], [VALUE], GROUP
; ELEM_LIST, CMD, TYPE, TYPE, DIR, VX, VY, VZ, bPROJ, [ECCEN], [VALUE], GROUP
; [VALUE]       : D1, P1, D2, P2, D3, P3, D4, P4
; [ECCEN]       : bECCEN, ECCDIR, I-END, J-END, bJ-END
; [ADDITIONAL]  : bADDITIONAL, ADDITIONAL_I-END, ADDITIONAL_J-END, bADDITIONAL_J-END
  6025, BEAM   , UNILOAD, GZ, NO , NO, aDir[1], , , , 0.648496, -3.21, 1, -3.21, 0, 0,
 0, 0, , NO, 0, 0, NO,
  6025, BEAM   , UNILOAD, GZ, NO , NO, aDir[1], , , , 0, -3.21, 0.648496, -3.21, 0, 0,
 0, 0, , NO, 0, 0, NO,
  6027, BEAM   , UNILOAD, GZ, NO , NO, aDir[1], , , , 0, -3.21, 1, -3.21, 0, 0, 0, 0,
, NO, 0, 0, NO,
  6028, BEAM   , UNILOAD, GZ, NO , NO, aDir[1], , , , 0, -3.21, 1, -3.21, 0, 0, 0, 0,
, NO, 0, 0, NO,
  6032, BEAM   , UNILOAD, GZ, NO , NO, aDir[1], , , , 0, -1.8, 1, -1.8, 0, 0, 0, 0, ,
NO, 0, 0, NO,
  6036, BEAM   , UNILOAD, GZ, NO , NO, aDir[1], , , , 0, -1.8, 1, -1.8, 0, 0, 0, 0, ,
NO, 0, 0, NO,
  6050, BEAM   , UNILOAD, GZ, NO , NO, aDir[1], , , , 0, -1.64, 1, -1.64, 0, 0, 0, 0,
, NO, 0, 0, NO,
  6050, BEAM   , UNILOAD, GZ, NO , NO, aDir[1], , , , 0, -3.21, 1, -3.21, 0, 0, 0, 0,
, NO, 0, 0, NO,
  6051, BEAM   , UNILOAD, GZ, NO , NO, aDir[1], , , , 0, -1.64, 1, -1.64, 0, 0, 0, 0,
, NO, 0, 0, NO,
  6051, BEAM   , UNILOAD, GZ, NO , NO, aDir[1], , , , 0, -3.21, 1, -3.21, 0, 0, 0, 0,
, NO, 0, 0, NO,
  6052, BEAM   , UNILOAD, GZ, NO , NO, aDir[1], , , , 0, -1.64, 1, -1.64, 0, 0, 0, 0,
, NO, 0, 0, NO,
  6052, BEAM   , UNILOAD, GZ, NO , NO, aDir[1], , , , 0, -3.21, 1, -3.21, 0, 0, 0, 0,
, NO, 0, 0, NO,
  6053, BEAM   , UNILOAD, GZ, NO , NO, aDir[1], , , , 0, -1.64, 1, -1.64, 0, 0, 0, 0,
, NO, 0, 0, NO,
  6053, BEAM   , UNILOAD, GZ, NO , NO, aDir[1], , , , 0, -3.21, 1, -3.21, 0, 0, 0, 0,
, NO, 0, 0, NO,
  6054, BEAM   , UNILOAD, GZ, NO , NO, aDir[1], , , , 0, -1.64, 1, -1.64, 0, 0, 0, 0,
, NO, 0, 0, NO,
  6054, BEAM   , UNILOAD, GZ, NO , NO, aDir[1], , , , 0, -3.21, 1, -3.21, 0, 0, 0, 0,
```

```
, NO, 0, 0, NO,
  6058, BEAM   , UNILOAD, GZ, NO , NO, aDir[1], , , , 0, -1.64, 1, -1.64, 0, 0, 0, 0,
, NO, 0, 0, NO,
  6059, BEAM   , UNILOAD, GZ, NO , NO, aDir[1], , , , 0, -1.64, 1, -1.64, 0, 0, 0, 0,
, NO, 0, 0, NO,
  6060, BEAM   , UNILOAD, GZ, NO , NO, aDir[1], , , , 0, -1.64, 1, -1.64, 0, 0, 0, 0,
, NO, 0, 0, NO,
  6061, BEAM   , UNILOAD, GZ, NO , NO, aDir[1], , , , 0, -1.64, 1, -1.64, 0, 0, 0, 0,
, NO, 0, 0, NO,
  6062, BEAM   , UNILOAD, GZ, NO , NO, aDir[1], , , , 0, -3.225, 1, -3.225, 0, 0, 0, 0
, , NO, 0, 0, NO,
  6063, BEAM   , UNILOAD, GZ, NO , NO, aDir[1], , , , 0, -3.175, 1, -3.175, 0, 0, 0, 0
, , NO, 0, 0, NO,
  6066, BEAM   , UNILOAD, GZ, NO , NO, aDir[1], , , , 0, -3.175, 1, -3.175, 0, 0, 0, 0
, , NO, 0, 0, NO,
  6066, BEAM   , UNILOAD, GZ, NO , NO, aDir[1], , , , 0, -3.225, 1, -3.225, 0, 0, 0, 0
, , NO, 0, 0, NO,
  6067, BEAM   , UNILOAD, GZ, NO , NO, aDir[1], , , , 0, -3.225, 1, -3.225, 0, 0, 0, 0
, , NO, 0, 0, NO,
  6070, BEAM   , UNILOAD, GZ, NO , NO, aDir[1], , , , 0, -3.175, 1, -3.175, 0, 0, 0, 0
, , NO, 0, 0, NO,
  6071, BEAM   , UNILOAD, GZ, NO , NO, aDir[1], , , , 0, -1.175, 1, -1.175, 0, 0, 0, 0
, , NO, 0, 0, NO,
  6071, BEAM   , UNILOAD, GZ, NO , NO, aDir[1], , , , 0, -2.68, 1, -2.68, 0, 0, 0, 0,
, NO, 0, 0, NO,
  6072, BEAM   , UNILOAD, GZ, NO , NO, aDir[1], , , , 0, -1.175, 1, -1.175, 0, 0, 0, 0
, , NO, 0, 0, NO,
  6072, BEAM   , UNILOAD, GZ, NO , NO, aDir[1], , , , 0, -2.68, 1, -2.68, 0, 0, 0, 0,
, NO, 0, 0, NO,
  6073, BEAM   , UNILOAD, GZ, NO , NO, aDir[1], , , , 0, -2.68, 1, -2.68, 0, 0, 0, 0,
, NO, 0, 0, NO,
  6074, BEAM   , UNILOAD, GZ, NO , NO, aDir[1], , , , 0, -2.68, 1, -2.68, 0, 0, 0, 0,
, NO, 0, 0, NO,
  6075, BEAM   , UNILOAD, GZ, NO , NO, aDir[1], , , , 0, -2.68, 1, -2.68, 0, 0, 0, 0,
, NO, 0, 0, NO,
  6076, BEAM   , UNILOAD, GZ, NO , NO, aDir[1], , , , 0, -2.68, 1, -2.68, 0, 0, 0, 0,
, NO, 0, 0, NO,
  6077, BEAM   , UNILOAD, GZ, NO , NO, aDir[1], , , , 0, -2.68, 1, -2.68, 0, 0, 0, 0,
, NO, 0, 0, NO,
  6078, BEAM   , UNILOAD, GZ, NO , NO, aDir[1], , , , 0, -2.68, 1, -2.68, 0, 0, 0, 0,
, NO, 0, 0, NO,
  6079, BEAM   , UNILOAD, GZ, NO , NO, aDir[1], , , , 0, -3.225, 1, -3.225, 0, 0, 0, 0
, , NO, 0, 0, NO,
  6079, BEAM   , UNILOAD, GZ, NO , NO, aDir[1], , , , 0, -3.175, 1, -3.175, 0, 0, 0, 0
, , NO, 0, 0, NO,
  6081, BEAM   , UNILOAD, GZ, NO , NO, aDir[1], , , , 0, -3.225, 1, -3.225, 0, 0, 0, 0
, , NO, 0, 0, NO,
  6082, BEAM   , UNILOAD, GZ, NO , NO, aDir[1], , , , 0, -3.175, 1, -3.175, 0, 0, 0, 0
, , NO, 0, 0, NO,
  6086, BEAM   , UNILOAD, GZ, NO , NO, aDir[1], , , , 0, -3.225, 1, -3.225, 0, 0, 0, 0
, , NO, 0, 0, NO,
  6087, BEAM   , UNILOAD, GZ, NO , NO, aDir[1], , , , 0, -3.225, 1, -3.225, 0, 0, 0, 0
, , NO, 0, 0, NO,
  6088, BEAM   , UNILOAD, GZ, NO , NO, aDir[1], , , , 0, -2.68, 1, -2.68, 0, 0, 0, 0,
, NO, 0, 0, NO,
  6089, BEAM   , UNILOAD, GZ, NO , NO, aDir[1], , , , 0, -2.68, 1, -2.68, 0, 0, 0, 0,
, NO, 0, 0, NO,
  6090, BEAM   , UNILOAD, GZ, NO , NO, aDir[1], , , , 0, -2.68, 1, -2.68, 0, 0, 0, 0,
, NO, 0, 0, NO,
  6091, BEAM   , UNILOAD, GZ, NO , NO, aDir[1], , , , 0, -2.68, 1, -2.68, 0, 0, 0, 0,
, NO, 0, 0, NO,
  6092, BEAM   , UNILOAD, GZ, NO , NO, aDir[1], , , , 0, -2.68, 1, -2.68, 0, 0, 0, 0,
```

```
, NO, 0, 0, NO,
  6093, BEAM   , UNILOAD, GZ, NO , NO, aDir[1], , , , 0, -2.68, 1, -2.68, 0, 0, 0, 0,
, NO, 0, 0, NO,
  6094, BEAM   , UNILOAD, GZ, NO , NO, aDir[1], , , , 0, -2.68, 1, -2.68, 0, 0, 0, 0,
, NO, 0, 0, NO,
  6109, BEAM   , UNILOAD, GZ, NO , NO, aDir[1], , , , 0, -3.21, 1, -3.21, 0, 0, 0, 0,
, NO, 0, 0, NO,
  6110, BEAM   , UNILOAD, GZ, NO , NO, aDir[1], , , , 0, -3.225, 1, -3.225, 0, 0, 0, 0
, , NO, 0, 0, NO,
  6112, BEAM   , UNILOAD, GZ, NO , NO, aDir[1], , , , 0, -3.225, 1, -3.225, 0, 0, 0, 0
, , NO, 0, 0, NO,
  6112, BEAM   , UNILOAD, GZ, NO , NO, aDir[1], , , , 0, -3.175, 1, -3.175, 0, 0, 0, 0
, , NO, 0, 0, NO,

; End of data for load case [G1+G2 copertura A] -------------------------

*USE-STLD, G1+G2 copertura B

*BEAMLOAD    ; Element Beam Loads
; ELEM_LIST, CMD, TYPE, DIR, bPROJ, [ECCEN], [VALUE], GROUP
; ELEM_LIST, CMD, TYPE, TYPE, DIR, VX, VY, VZ, bPROJ, [ECCEN], [VALUE], GROUP
; [VALUE]       : D1, P1, D2, P2, D3, P3, D4, P4
; [ECCEN]       : bECCEN, ECCDIR, I-END, J-END, bJ-END
; [ADDITIONAL]  : bADDITIONAL, ADDITIONAL_I-END, ADDITIONAL_J-END, bADDITIONAL_J-END
  6073, BEAM   , UNILOAD, GZ, NO , NO, aDir[1], , , , 0, -5.125, 1, -5.125, 0, 0, 0, 0
, , NO, 0, 0, NO,
  6074, BEAM   , UNILOAD, GZ, NO , NO, aDir[1], , , , 0, -5.125, 1, -5.125, 0, 0, 0, 0
, , NO, 0, 0, NO,
  6075, BEAM   , UNILOAD, GZ, NO , NO, aDir[1], , , , 0, -5.125, 1, -5.125, 0, 0, 0, 0
, , NO, 0, 0, NO,
  6076, BEAM   , UNILOAD, GZ, NO , NO, aDir[1], , , , 0, -5.125, 1, -5.125, 0, 0, 0, 0
, , NO, 0, 0, NO,
  6077, BEAM   , UNILOAD, GZ, NO , NO, aDir[1], , , , 0, -5.125, 1, -5.125, 0, 0, 0, 0
, , NO, 0, 0, NO,
  6078, BEAM   , UNILOAD, GZ, NO , NO, aDir[1], , , , 0, -5.125, 1, -5.125, 0, 0, 0, 0
, , NO, 0, 0, NO,

; End of data for load case [G1+G2 copertura B] -------------------------

*USE-STLD, sporto gronda

*BEAMLOAD    ; Element Beam Loads
; ELEM_LIST, CMD, TYPE, DIR, bPROJ, [ECCEN], [VALUE], GROUP
; ELEM_LIST, CMD, TYPE, TYPE, DIR, VX, VY, VZ, bPROJ, [ECCEN], [VALUE], GROUP
; [VALUE]       : D1, P1, D2, P2, D3, P3, D4, P4
; [ECCEN]       : bECCEN, ECCDIR, I-END, J-END, bJ-END
; [ADDITIONAL]  : bADDITIONAL, ADDITIONAL_I-END, ADDITIONAL_J-END, bADDITIONAL_J-END
  6025, BEAM   , UNILOAD, GZ, NO , NO, aDir[1], , , , 0, -1, 0.648496, -1, 0, 0, 0, 0,
 , NO, 0, 0, NO,
  6025, BEAM   , UNILOAD, GZ, NO , NO, aDir[1], , , , 0.648496, -1, 1, -1, 0, 0, 0, 0,
 , NO, 0, 0, NO,
  6027, BEAM   , UNILOAD, GZ, NO , NO, aDir[1], , , , 0, -1, 1, -1, 0, 0, 0, 0, , NO,
0, 0, NO,
  6028, BEAM   , UNILOAD, GZ, NO , NO, aDir[1], , , , 0, -1, 1, -1, 0, 0, 0, 0, , NO,
0, 0, NO,
  6063, BEAM   , UNILOAD, GZ, NO , NO, aDir[1], , , , 0, -1, 1, -1, 0, 0, 0, 0, , NO,
0, 0, NO,
  6070, BEAM   , UNILOAD, GZ, NO , NO, aDir[1], , , , 0, -1, 1, -1, 0, 0, 0, 0, , NO,
0, 0, NO,
  6082, BEAM   , UNILOAD, GZ, NO , NO, aDir[1], , , , 0, -1, 1, -1, 0, 0, 0, 0, , NO,
0, 0, NO,
  6088, BEAM   , UNILOAD, GZ, NO , NO, aDir[1], , , , 0, -1, 1, -1, 0, 0, 0, 0, , NO,
```

```
0, 0, NO,
  6089, BEAM   , UNILOAD, GZ, NO , NO, aDir[1], , , , 0, -1, 1, -1, 0, 0, 0, 0, , NO,
0, 0, NO,
  6090, BEAM   , UNILOAD, GZ, NO , NO, aDir[1], , , , 0, -1, 1, -1, 0, 0, 0, 0, , NO,
0, 0, NO,
  6091, BEAM   , UNILOAD, GZ, NO , NO, aDir[1], , , , 0, -1, 1, -1, 0, 0, 0, 0, , NO,
0, 0, NO,
  6092, BEAM   , UNILOAD, GZ, NO , NO, aDir[1], , , , 0, -1, 1, -1, 0, 0, 0, 0, , NO,
0, 0, NO,
  6093, BEAM   , UNILOAD, GZ, NO , NO, aDir[1], , , , 0, -1, 1, -1, 0, 0, 0, 0, , NO,
0, 0, NO,
  6094, BEAM   , UNILOAD, GZ, NO , NO, aDir[1], , , , 0, -1, 1, -1, 0, 0, 0, 0, , NO,
0, 0, NO,
  6095, BEAM   , UNILOAD, GZ, NO , NO, aDir[1], , , , 0, -1, 1, -1, 0, 0, 0, 0, , NO,
0, 0, NO,
  6096, BEAM   , UNILOAD, GZ, NO , NO, aDir[1], , , , 0, -1, 1, -1, 0, 0, 0, 0, , NO,
0, 0, NO,
  6097, BEAM   , UNILOAD, GZ, NO , NO, aDir[1], , , , 0, -1, 1, -1, 0, 0, 0, 0, , NO,
0, 0, NO,
  6109, BEAM   , UNILOAD, GZ, NO , NO, aDir[1], , , , 0, -1, 1, -1, 0, 0, 0, 0, , NO,
0, 0, NO,

; End of data for load case [sporto gronda] -------------------------

*USE-STLD, Q neve

*BEAMLOAD    ; Element Beam Loads
; ELEM_LIST, CMD, TYPE, DIR, bPROJ, [ECCEN], [VALUE], GROUP
; ELEM_LIST, CMD, TYPE, TYPE, DIR, VX, VY, VZ, bPROJ, [ECCEN], [VALUE], GROUP
; [VALUE]       : D1, P1, D2, P2, D3, P3, D4, P4
; [ECCEN]       : bECCEN, ECCDIR, I-END, J-END, bJ-END
; [ADDITIONAL]  : bADDITIONAL, ADDITIONAL_I-END, ADDITIONAL_J-END, bADDITIONAL_J-END
  6025, BEAM   , UNILOAD, GZ, NO , NO, aDir[1], , , , 0.648496, -3.21, 1, -3.21, 0, 0,
 0, 0, , NO, 0, 0, NO,
  6025, BEAM   , UNILOAD, GZ, NO , NO, aDir[1], , , , 0, -3.21, 0.648496, -3.21, 0, 0,
 0, 0, , NO, 0, 0, NO,
  6027, BEAM   , UNILOAD, GZ, NO , NO, aDir[1], , , , 0, -3.21, 1, -3.21, 0, 0, 0, 0,
, NO, 0, 0, NO,
  6028, BEAM   , UNILOAD, GZ, NO , NO, aDir[1], , , , 0, -3.21, 1, -3.21, 0, 0, 0, 0,
, NO, 0, 0, NO,
  6032, BEAM   , UNILOAD, GZ, NO , NO, aDir[1], , , , 0, -1.8, 1, -1.8, 0, 0, 0, 0, ,
NO, 0, 0, NO,
  6036, BEAM   , UNILOAD, GZ, NO , NO, aDir[1], , , , 0, -1.8, 1, -1.8, 0, 0, 0, 0, ,
NO, 0, 0, NO,
  6050, BEAM   , UNILOAD, GZ, NO , NO, aDir[1], , , , 0, -1.64, 1, -1.64, 0, 0, 0, 0,
, NO, 0, 0, NO,
  6050, BEAM   , UNILOAD, GZ, NO , NO, aDir[1], , , , 0, -3.21, 1, -3.21, 0, 0, 0, 0,
, NO, 0, 0, NO,
  6051, BEAM   , UNILOAD, GZ, NO , NO, aDir[1], , , , 0, -1.64, 1, -1.64, 0, 0, 0, 0,
, NO, 0, 0, NO,
  6051, BEAM   , UNILOAD, GZ, NO , NO, aDir[1], , , , 0, -3.21, 1, -3.21, 0, 0, 0, 0,
, NO, 0, 0, NO,
  6052, BEAM   , UNILOAD, GZ, NO , NO, aDir[1], , , , 0, -1.64, 1, -1.64, 0, 0, 0, 0,
, NO, 0, 0, NO,
  6052, BEAM   , UNILOAD, GZ, NO , NO, aDir[1], , , , 0, -3.21, 1, -3.21, 0, 0, 0, 0,
, NO, 0, 0, NO,
  6053, BEAM   , UNILOAD, GZ, NO , NO, aDir[1], , , , 0, -3.21, 1, -3.21, 0, 0, 0, 0,
, NO, 0, 0, NO,
  6053, BEAM   , UNILOAD, GZ, NO , NO, aDir[1], , , , 0, -1.64, 1, -1.64, 0, 0, 0, 0,
, NO, 0, 0, NO,
  6054, BEAM   , UNILOAD, GZ, NO , NO, aDir[1], , , , 0, -1.64, 1, -1.64, 0, 0, 0, 0,
, NO, 0, 0, NO,
```

```
  6054, BEAM   , UNILOAD, GZ, NO , NO, aDir[1], , , , 0, -3.21, 1, -3.21, 0, 0, 0, 0,
, NO, 0, 0, NO,
  6058, BEAM   , UNILOAD, GZ, NO , NO, aDir[1], , , , 0, -1.64, 1, -1.64, 0, 0, 0, 0,
, NO, 0, 0, NO,
  6059, BEAM   , UNILOAD, GZ, NO , NO, aDir[1], , , , 0, -1.64, 1, -1.64, 0, 0, 0, 0,
, NO, 0, 0, NO,
  6060, BEAM   , UNILOAD, GZ, NO , NO, aDir[1], , , , 0, -1.64, 1, -1.64, 0, 0, 0, 0,
, NO, 0, 0, NO,
  6061, BEAM   , UNILOAD, GZ, NO , NO, aDir[1], , , , 0, -1.64, 1, -1.64, 0, 0, 0, 0,
, NO, 0, 0, NO,
  6062, BEAM   , UNILOAD, GZ, NO , NO, aDir[1], , , , 0, -3.225, 1, -3.225, 0, 0, 0, 0
, , NO, 0, 0, NO,
  6063, BEAM   , UNILOAD, GZ, NO , NO, aDir[1], , , , 0, -3.175, 1, -3.175, 0, 0, 0, 0
, , NO, 0, 0, NO,
  6066, BEAM   , UNILOAD, GZ, NO , NO, aDir[1], , , , 0, -3.175, 1, -3.175, 0, 0, 0, 0
, , NO, 0, 0, NO,
  6066, BEAM   , UNILOAD, GZ, NO , NO, aDir[1], , , , 0, -3.225, 1, -3.225, 0, 0, 0, 0
, , NO, 0, 0, NO,
  6067, BEAM   , UNILOAD, GZ, NO , NO, aDir[1], , , , 0, -3.225, 1, -3.225, 0, 0, 0, 0
, , NO, 0, 0, NO,
  6070, BEAM   , UNILOAD, GZ, NO , NO, aDir[1], , , , 0, -3.175, 1, -3.175, 0, 0, 0, 0
, , NO, 0, 0, NO,
  6071, BEAM   , UNILOAD, GZ, NO , NO, aDir[1], , , , 0, -1.175, 1, -1.175, 0, 0, 0, 0
, , NO, 0, 0, NO,
  6071, BEAM   , UNILOAD, GZ, NO , NO, aDir[1], , , , 0, -2.68, 1, -2.68, 0, 0, 0, 0,
, NO, 0, 0, NO,
  6072, BEAM   , UNILOAD, GZ, NO , NO, aDir[1], , , , 0, -1.175, 1, -1.175, 0, 0, 0, 0
, , NO, 0, 0, NO,
  6072, BEAM   , UNILOAD, GZ, NO , NO, aDir[1], , , , 0, -2.68, 1, -2.68, 0, 0, 0, 0,
, NO, 0, 0, NO,
  6073, BEAM   , UNILOAD, GZ, NO , NO, aDir[1], , , , 0, -2.68, 1, -2.68, 0, 0, 0, 0,
, NO, 0, 0, NO,
  6073, BEAM   , UNILOAD, GZ, NO , NO, aDir[1], , , , 0, -5.125, 1, -5.125, 0, 0, 0, 0
, , NO, 0, 0, NO,
  6074, BEAM   , UNILOAD, GZ, NO , NO, aDir[1], , , , 0, -2.68, 1, -2.68, 0, 0, 0, 0,
, NO, 0, 0, NO,
  6074, BEAM   , UNILOAD, GZ, NO , NO, aDir[1], , , , 0, -5.125, 1, -5.125, 0, 0, 0, 0
, , NO, 0, 0, NO,
  6075, BEAM   , UNILOAD, GZ, NO , NO, aDir[1], , , , 0, -2.68, 1, -2.68, 0, 0, 0, 0,
, NO, 0, 0, NO,
  6075, BEAM   , UNILOAD, GZ, NO , NO, aDir[1], , , , 0, -5.125, 1, -5.125, 0, 0, 0, 0
, , NO, 0, 0, NO,
  6076, BEAM   , UNILOAD, GZ, NO , NO, aDir[1], , , , 0, -5.125, 1, -5.125, 0, 0, 0, 0
, , NO, 0, 0, NO,
  6076, BEAM   , UNILOAD, GZ, NO , NO, aDir[1], , , , 0, -2.68, 1, -2.68, 0, 0, 0, 0,
, NO, 0, 0, NO,
  6077, BEAM   , UNILOAD, GZ, NO , NO, aDir[1], , , , 0, -2.68, 1, -2.68, 0, 0, 0, 0,
, NO, 0, 0, NO,
  6077, BEAM   , UNILOAD, GZ, NO , NO, aDir[1], , , , 0, -5.125, 1, -5.125, 0, 0, 0, 0
, , NO, 0, 0, NO,
  6078, BEAM   , UNILOAD, GZ, NO , NO, aDir[1], , , , 0, -2.68, 1, -2.68, 0, 0, 0, 0,
, NO, 0, 0, NO,
  6078, BEAM   , UNILOAD, GZ, NO , NO, aDir[1], , , , 0, -5.125, 1, -5.125, 0, 0, 0, 0
, , NO, 0, 0, NO,
  6079, BEAM   , UNILOAD, GZ, NO , NO, aDir[1], , , , 0, -3.225, 1, -3.225, 0, 0, 0, 0
, , NO, 0, 0, NO,
  6079, BEAM   , UNILOAD, GZ, NO , NO, aDir[1], , , , 0, -3.175, 1, -3.175, 0, 0, 0, 0
, , NO, 0, 0, NO,
  6081, BEAM   , UNILOAD, GZ, NO , NO, aDir[1], , , , 0, -3.225, 1, -3.225, 0, 0, 0, 0
, , NO, 0, 0, NO,
  6082, BEAM   , UNILOAD, GZ, NO , NO, aDir[1], , , , 0, -3.175, 1, -3.175, 0, 0, 0, 0
, , NO, 0, 0, NO,
```

```
  6086, BEAM   , UNILOAD, GZ, NO , NO, aDir[1], , , , 0, -3.225, 1, -3.225, 0, 0, 0, 0
, , NO, 0, 0, NO,
  6087, BEAM   , UNILOAD, GZ, NO , NO, aDir[1], , , , 0, -3.225, 1, -3.225, 0, 0, 0, 0
, , NO, 0, 0, NO,
  6088, BEAM   , UNILOAD, GZ, NO , NO, aDir[1], , , , 0, -2.68, 1, -2.68, 0, 0, 0, 0,
, NO, 0, 0, NO,
  6089, BEAM   , UNILOAD, GZ, NO , NO, aDir[1], , , , 0, -2.68, 1, -2.68, 0, 0, 0, 0,
, NO, 0, 0, NO,
  6090, BEAM   , UNILOAD, GZ, NO , NO, aDir[1], , , , 0, -2.68, 1, -2.68, 0, 0, 0, 0,
, NO, 0, 0, NO,
  6091, BEAM   , UNILOAD, GZ, NO , NO, aDir[1], , , , 0, -2.68, 1, -2.68, 0, 0, 0, 0,
, NO, 0, 0, NO,
  6092, BEAM   , UNILOAD, GZ, NO , NO, aDir[1], , , , 0, -2.68, 1, -2.68, 0, 0, 0, 0,
, NO, 0, 0, NO,
  6093, BEAM   , UNILOAD, GZ, NO , NO, aDir[1], , , , 0, -2.68, 1, -2.68, 0, 0, 0, 0,
, NO, 0, 0, NO,
  6094, BEAM   , UNILOAD, GZ, NO , NO, aDir[1], , , , 0, -2.68, 1, -2.68, 0, 0, 0, 0,
, NO, 0, 0, NO,
  6109, BEAM   , UNILOAD, GZ, NO , NO, aDir[1], , , , 0, -3.21, 1, -3.21, 0, 0, 0, 0,
, NO, 0, 0, NO,
  6110, BEAM   , UNILOAD, GZ, NO , NO, aDir[1], , , , 0, -3.225, 1, -3.225, 0, 0, 0, 0
, , NO, 0, 0, NO,
  6112, BEAM   , UNILOAD, GZ, NO , NO, aDir[1], , , , 0, -3.225, 1, -3.225, 0, 0, 0, 0
, , NO, 0, 0, NO,
  6112, BEAM   , UNILOAD, GZ, NO , NO, aDir[1], , , , 0, -3.175, 1, -3.175, 0, 0, 0, 0
, , NO, 0, 0, NO,

; End of data for load case [Q neve] -------------------------

*USE-STLD, SISMA X

*SEIS    ; Static Seismic Loads
; CODE=CODE, SFX, SFY, ECCX, ECCY, bACC, bINH, DESC, SFZR
   ; line 1
; [KS1992]   : SPT, EA, IF, PAX, PAY, PCX, PCY, RMFX, RMFY
   ; line 2
; [UBC1991]  : SPT, ZF, IF, PAX, PAY, PCX, PCY, NCX, NCY
   ; line 2
; [UBC1997]  : SPT, ZF, SST, CD, IF, PX, PY, NCX, NCY, PAX, PAY
   ; line 2
; [ATC306]   : SPC, EPV, PAX, PAY, PCX, PCY, RMFX, RMFY
   ; line 2
; [KS2000]   : SPT, EA, IF, PAX, PAY, PCX, PCY, RMFX, RMFY
   ; line 2
; [JIS]      : SPT, EA, SF, PAX, PAY, PCX, PCY, RMFX, RMFY, [JIS-AI]
   ; line 2
; [IBC2000]  : SDC, SC, MS, M1, IF, PX, PY, PCX, PCY, RMFX, RMFY
   ; line 2
; [EURO1996] : S, QO, KD, KR, KW, ALPHA, FPX, FPY
   ; line 2
; [CH2002]   : NSC, SFI, SC, ST, DR, EQ, bMM, FPX, FPY
   ; line 2
; [CHSH2003] : SFI, SC, ST, DR, EQ, bMM, FPX, FPY
   ; line 2
; [NBC1995]  : ZVR, AZ, VZ, IF, FF, PAX, PAY, PCX, PCY, FMFX, FMFY
   ; line 2
; [IS2002]   : SZ, ST, IF, DAMP, FPX, FPY, RFX, RFY
   ; line 2
; [TAIWAN99] : SZ, ST, IF, SMF, PM, PAX, PAY, PApX, PApY, PFX, PFY, RMFX, RMFY
   ; line 2
; [KBC2005]  : RA, SZ(Sds), SC(Sd1), SUG, bCPR, IF, iP, PAX, PAY, PApX, PApY, RMFX, RM
FY ; line 2
```

```
; [TAIWAN06] : SZ, Sds, Sd1, Sms, Sm1,Nda, Ndv,Nma, Nmv, ST, Fda, Fdv, Fma, Fmv, SubZ,

;  Sds_t, Sms_t, Td0_t, Tm0_t, IF, ALPHA, PM, PAX, PAY, PApX, PApY, PFX, PFY, RMFX, RM
FY ; line 2
; [EURO2004] : iGR, iSPE, S, TB, TC, TD, AG, Q, LBF, IF, FPX, FPY,
   ; line 2
; [JIS-AI]   : bUSER, STORY1, XDIR1, YDIR1, STORY2, XDIR2, YDIR2, ...
; [KBC2009]  : SZ, ZF, SC, CU, FA, Fv, SDS, SD1, SUG, IF, ip, PAX, PAY, PApX, PApY, RM
FX, RMFY
; [TAIWAN11] : SZ, Sds, Sd1, Sms, Sm1,Nda, Ndv,Nma, Nmv, ST, Fda, Fdv, Fma, Fmv, SubZ,

;  Sds_t, Sms_t, Td0_t, Tm0_t, IF, ALPHA, PM, PAX, PAY, PApX, PApY, PFX, PFY, RMFX, RM
FY ; line 2
; [NTC2008]  : iGR, iSPE, S, TB, TC, TD, AG, Q, AMPF, Tc*, FPX, FPY,
   ; line 2
; [CH2010]   : NSC, SFI, SC, ST, DR, EQ, bMM, FPX, FPY
   ; line 2
; [IBC2009]  : SC, Ss, S1, Fa, Fv, Sds, Sd1, Cu, TL, OC, IF, iP, PAX, PAY, PApX, PApY,
 RMFX, RMFY ; line 2
; [IBC2012]  : SC, Ss, S1, Fa, Fv, Sds, Sd1, Cu, TL, RC, IF, iP, PAX, PAY, PApX, PApY,
 RMFX, RMFY ; line 2
; [NTC2012]  : iGR, iSPE, S, TB, TC, TD, AG, Q, AMPF, Tc*, FPX, FPY,
   ; line 2
; [P100_2013]: iSPE, TB, TC, TD, AG, Q, IF, FPX, FPY
   ; line 2
; [IS1893_2016]: Zone, Soil, IF, Damp, Peri.X, Peri.Y, RsRdFact_X, RsRdFact_Y
   ; line 2
; [NTC2018]  : iGR, iSPE, S, TB, TC, TD, AG, Q, AMPF, Tc*, FPX, FPY,
   ; line 2
; SSTORY1, ESTORY1, ADDX1, ADDY1, ...
   ; from line 3
   CODE=NTC2018, 1, 0, POS, POS, NO, NO, , 0
        2, 4, 1.427, 0.147, 0.44, 2.336, 0.184, 1, 2.47, 0.273, 0, 0

; End of data for load case [SISMA X] -------------------------

*USE-STLD, SISMA Y

*SEIS    ; Static Seismic Loads
; CODE=CODE, SFX, SFY, ECCX, ECCY, bACC, bINH, DESC, SFZR
   ; line 1
; [KS1992]   : SPT, EA, IF, PAX, PAY, PCX, PCY, RMFX, RMFY
   ; line 2
; [UBC1991]  : SPT, ZF, IF, PAX, PAY, PCX, PCY, NCX, NCY
   ; line 2
; [UBC1997]  : SPT, ZF, SST, CD, IF, PX, PY, NCX, NCY, PAX, PAY
   ; line 2
; [ATC306]   : SPC, EPV, PAX, PAY, PCX, PCY, RMFX, RMFY
   ; line 2
; [KS2000]   : SPT, EA, IF, PAX, PAY, PCX, PCY, RMFX, RMFY
   ; line 2
; [JIS]      : SPT, EA, SF, PAX, PAY, PCX, PCY, RMFX, RMFY, [JIS-AI]
   ; line 2
; [IBC2000]  : SDC, SC, MS, M1, IF, PX, PY, PCX, PCY, RMFX, RMFY
   ; line 2
; [EURO1996] : S, QO, KD, KR, KW, ALPHA, FPX, FPY
   ; line 2
; [CH2002]   : NSC, SFI, SC, ST, DR, EQ, bMM, FPX, FPY
   ; line 2
; [CHSH2003] : SFI, SC, ST, DR, EQ, bMM, FPX, FPY
   ; line 2
; [NBC1995]  : ZVR, AZ, VZ, IF, FF, PAX, PAY, PCX, PCY, FMFX, FMFY
```

```
   ; line 2
; [IS2002]   : SZ, ST, IF, DAMP, FPX, FPY, RFX, RFY
   ; line 2
; [TAIWAN99] : SZ, ST, IF, SMF, PM, PAX, PAY, PApX, PApY, PFX, PFY, RMFX, RMFY
   ; line 2
; [KBC2005]  : RA, SZ(Sds), SC(Sd1), SUG, bCPR, IF, iP, PAX, PAY, PApX, PApY, RMFX, RM
FY ; line 2
; [TAIWAN06] : SZ, Sds, Sd1, Sms, Sm1,Nda, Ndv,Nma, Nmv, ST, Fda, Fdv, Fma, Fmv, SubZ,

;  Sds_t, Sms_t, Td0_t, Tm0_t, IF, ALPHA, PM, PAX, PAY, PApX, PApY, PFX, PFY, RMFX, RM
FY ; line 2
; [EURO2004] : iGR, iSPE, S, TB, TC, TD, AG, Q, LBF, IF, FPX, FPY,
   ; line 2
; [JIS-AI]   : bUSER, STORY1, XDIR1, YDIR1, STORY2, XDIR2, YDIR2, ...
; [KBC2009]  : SZ, ZF, SC, CU, FA, Fv, SDS, SD1, SUG, IF, ip, PAX, PAY, PApX, PApY, RM
FX, RMFY
; [TAIWAN11] : SZ, Sds, Sd1, Sms, Sm1,Nda, Ndv,Nma, Nmv, ST, Fda, Fdv, Fma, Fmv, SubZ,

;  Sds_t, Sms_t, Td0_t, Tm0_t, IF, ALPHA, PM, PAX, PAY, PApX, PApY, PFX, PFY, RMFX, RM
FY ; line 2
; [NTC2008]  : iGR, iSPE, S, TB, TC, TD, AG, Q, AMPF, Tc*, FPX, FPY,
   ; line 2
; [CH2010]   : NSC, SFI, SC, ST, DR, EQ, bMM, FPX, FPY
   ; line 2
; [IBC2009]  : SC, Ss, S1, Fa, Fv, Sds, Sd1, Cu, TL, OC, IF, iP, PAX, PAY, PApX, PApY,
 RMFX, RMFY ; line 2
; [IBC2012]  : SC, Ss, S1, Fa, Fv, Sds, Sd1, Cu, TL, RC, IF, iP, PAX, PAY, PApX, PApY,
 RMFX, RMFY ; line 2
; [NTC2012]  : iGR, iSPE, S, TB, TC, TD, AG, Q, AMPF, Tc*, FPX, FPY,
   ; line 2
; [P100_2013]: iSPE, TB, TC, TD, AG, Q, IF, FPX, FPY
   ; line 2
; [IS1893_2016]: Zone, Soil, IF, Damp, Peri.X, Peri.Y, RsRdFact_X, RsRdFact_Y
   ; line 2
; [NTC2018]  : iGR, iSPE, S, TB, TC, TD, AG, Q, AMPF, Tc*, FPX, FPY,
   ; line 2
; SSTORY1, ESTORY1, ADDX1, ADDY1, ...
   ; from line 3
   CODE=NTC2018, 0, 1, POS, POS, NO, NO, , 0
        2, 4, 1.427, 0.147, 0.44, 2.336, 0.184, 1, 2.47, 0.273, 0, 0

; End of data for load case [SISMA Y] -------------------------

*USE-STLD, travi

*BEAMLOAD    ; Element Beam Loads
; ELEM_LIST, CMD, TYPE, DIR, bPROJ, [ECCEN], [VALUE], GROUP
; ELEM_LIST, CMD, TYPE, TYPE, DIR, VX, VY, VZ, bPROJ, [ECCEN], [VALUE], GROUP
; [VALUE]       : D1, P1, D2, P2, D3, P3, D4, P4
; [ECCEN]       : bECCEN, ECCDIR, I-END, J-END, bJ-END
; [ADDITIONAL]  : bADDITIONAL, ADDITIONAL_I-END, ADDITIONAL_J-END, bADDITIONAL_J-END
  6045, BEAM   , UNILOAD, GZ, NO , NO, aDir[1], , , , 0, -1, 1, -1, 0, 0, 0, 0, , NO,
0, 0, NO,
  6047, BEAM   , UNILOAD, GZ, NO , NO, aDir[1], , , , 0, -1, 1, -1, 0, 0, 0, 0, , NO,
0, 0, NO,
  6055, BEAM   , UNILOAD, GZ, NO , NO, aDir[1], , , , 0, -1, 1, -1, 0, 0, 0, 0, , NO,
0, 0, NO,
  6062, BEAM   , UNILOAD, GZ, NO , NO, aDir[1], , , , 0, -1, 1, -1, 0, 0, 0, 0, , NO,
0, 0, NO,
  6067, BEAM   , UNILOAD, GZ, NO , NO, aDir[1], , , , 0, -1, 1, -1, 0, 0, 0, 0, , NO,
0, 0, NO,
  6073, BEAM   , UNILOAD, GZ, NO , NO, aDir[1], , , , 0, -1, 1, -1, 0, 0, 0, 0, , NO,
```

```
0, 0, NO,
  6074, BEAM   , UNILOAD, GZ, NO , NO, aDir[1], , , , 0, -1, 1, -1, 0, 0, 0, 0, , NO,
0, 0, NO,
  6075, BEAM   , UNILOAD, GZ, NO , NO, aDir[1], , , , 0, -1, 1, -1, 0, 0, 0, 0, , NO,
0, 0, NO,
  6076, BEAM   , UNILOAD, GZ, NO , NO, aDir[1], , , , 0, -1, 1, -1, 0, 0, 0, 0, , NO,
0, 0, NO,
  6077, BEAM   , UNILOAD, GZ, NO , NO, aDir[1], , , , 0, -1, 1, -1, 0, 0, 0, 0, , NO,
0, 0, NO,
  6078, BEAM   , UNILOAD, GZ, NO , NO, aDir[1], , , , 0, -1, 1, -1, 0, 0, 0, 0, , NO,
0, 0, NO,

; End of data for load case [travi] -------------------------

*USE-STLD, parapetto

*BEAMLOAD    ; Element Beam Loads
; ELEM_LIST, CMD, TYPE, DIR, bPROJ, [ECCEN], [VALUE], GROUP
; ELEM_LIST, CMD, TYPE, TYPE, DIR, VX, VY, VZ, bPROJ, [ECCEN], [VALUE], GROUP
; [VALUE]       : D1, P1, D2, P2, D3, P3, D4, P4
; [ECCEN]       : bECCEN, ECCDIR, I-END, J-END, bJ-END
; [ADDITIONAL]  : bADDITIONAL, ADDITIONAL_I-END, ADDITIONAL_J-END, bADDITIONAL_J-END
  6025, BEAM   , UNILOAD, GZ, NO , NO, aDir[1], , , , 0, -1, 0.648496, -1, 0, 0, 0, 0,
 , NO, 0, 0, NO,
  6025, BEAM   , UNILOAD, GZ, NO , NO, aDir[1], , , , 0.648496, -1, 1, -1, 0, 0, 0, 0,
 , NO, 0, 0, NO,
  6027, BEAM   , UNILOAD, GZ, NO , NO, aDir[1], , , , 0, -1, 1, -1, 0, 0, 0, 0, , NO,
0, 0, NO,
  6028, BEAM   , UNILOAD, GZ, NO , NO, aDir[1], , , , 0, -1, 1, -1, 0, 0, 0, 0, , NO,
0, 0, NO,
  6032, BEAM   , UNILOAD, GZ, NO , NO, aDir[1], , , , 0, -1, 1, -1, 0, 0, 0, 0, , NO,
0, 0, NO,
  6034, BEAM   , UNILOAD, GZ, NO , NO, aDir[1], , , , 0, -1, 1, -1, 0, 0, 0, 0, , NO,
0, 0, NO,
  6036, BEAM   , UNILOAD, GZ, NO , NO, aDir[1], , , , 0, -1, 1, -1, 0, 0, 0, 0, , NO,
0, 0, NO,
  6045, BEAM   , UNILOAD, GZ, NO , NO, aDir[1], , , , 0, -1, 1, -1, 0, 0, 0, 0, , NO,
0, 0, NO,
  6049, BEAM   , UNILOAD, GZ, NO , NO, aDir[1], , , , 0, -1, 1, -1, 0, 0, 0, 0, , NO,
0, 0, NO,
  6056, BEAM   , UNILOAD, GZ, NO , NO, aDir[1], , , , 0, -1, 1, -1, 0, 0, 0, 0, , NO,
0, 0, NO,
  6063, BEAM   , UNILOAD, GZ, NO , NO, aDir[1], , , , 0, -1, 1, -1, 0, 0, 0, 0, , NO,
0, 0, NO,
  6070, BEAM   , UNILOAD, GZ, NO , NO, aDir[1], , , , 0, -1, 1, -1, 0, 0, 0, 0, , NO,
0, 0, NO,
  6080, BEAM   , UNILOAD, GZ, NO , NO, aDir[1], , , , 0, -1, 1, -1, 0, 0, 0, 0, , NO,
0, 0, NO,
  6082, BEAM   , UNILOAD, GZ, NO , NO, aDir[1], , , , 0, -1, 1, -1, 0, 0, 0, 0, , NO,
0, 0, NO,
  6083, BEAM   , UNILOAD, GZ, NO , NO, aDir[1], , , , 0, -1, 1, -1, 0, 0, 0, 0, , NO,
0, 0, NO,
  6084, BEAM   , UNILOAD, GZ, NO , NO, aDir[1], , , , 0, -1, 1, -1, 0, 0, 0, 0, , NO,
0, 0, NO,
  6085, BEAM   , UNILOAD, GZ, NO , NO, aDir[1], , , , 0, -1, 1, -1, 0, 0, 0, 0, , NO,
0, 0, NO,
  6087, BEAM   , UNILOAD, GZ, NO , NO, aDir[1], , , , 0, -1, 1, -1, 0, 0, 0, 0, , NO,
0, 0, NO,
  6088, BEAM   , UNILOAD, GZ, NO , NO, aDir[1], , , , 0, -1, 1, -1, 0, 0, 0, 0, , NO,
0, 0, NO,
  6089, BEAM   , UNILOAD, GZ, NO , NO, aDir[1], , , , 0, -1, 1, -1, 0, 0, 0, 0, , NO,
0, 0, NO,
```

```
  6090, BEAM   , UNILOAD, GZ, NO , NO, aDir[1], , , , 0, -1, 1, -1, 0, 0, 0, 0, , NO,
0, 0, NO,
  6091, BEAM   , UNILOAD, GZ, NO , NO, aDir[1], , , , 0, -1, 1, -1, 0, 0, 0, 0, , NO,
0, 0, NO,
  6092, BEAM   , UNILOAD, GZ, NO , NO, aDir[1], , , , 0, -1, 1, -1, 0, 0, 0, 0, , NO,
0, 0, NO,
  6093, BEAM   , UNILOAD, GZ, NO , NO, aDir[1], , , , 0, -1, 1, -1, 0, 0, 0, 0, , NO,
0, 0, NO,
  6094, BEAM   , UNILOAD, GZ, NO , NO, aDir[1], , , , 0, -1, 1, -1, 0, 0, 0, 0, , NO,
0, 0, NO,
  6095, BEAM   , UNILOAD, GZ, NO , NO, aDir[1], , , , 0, -1, 1, -1, 0, 0, 0, 0, , NO,
0, 0, NO,
  6096, BEAM   , UNILOAD, GZ, NO , NO, aDir[1], , , , 0, -1, 1, -1, 0, 0, 0, 0, , NO,
0, 0, NO,
  6097, BEAM   , UNILOAD, GZ, NO , NO, aDir[1], , , , 0, -1, 1, -1, 0, 0, 0, 0, , NO,
0, 0, NO,
  6109, BEAM   , UNILOAD, GZ, NO , NO, aDir[1], , , , 0, -1, 1, -1, 0, 0, 0, 0, , NO,
0, 0, NO,
  6110, BEAM   , UNILOAD, GZ, NO , NO, aDir[1], , , , 0, -1, 1, -1, 0, 0, 0, 0, , NO,
0, 0, NO,

; End of data for load case [parapetto] -------------------------

*USE-STLD, muro

*BEAMLOAD    ; Element Beam Loads
; ELEM_LIST, CMD, TYPE, DIR, bPROJ, [ECCEN], [VALUE], GROUP
; ELEM_LIST, CMD, TYPE, TYPE, DIR, VX, VY, VZ, bPROJ, [ECCEN], [VALUE], GROUP
; [VALUE]       : D1, P1, D2, P2, D3, P3, D4, P4
; [ECCEN]       : bECCEN, ECCDIR, I-END, J-END, bJ-END
; [ADDITIONAL]  : bADDITIONAL, ADDITIONAL_I-END, ADDITIONAL_J-END, bADDITIONAL_J-END
  6073, BEAM   , UNILOAD, GZ, NO , NO, aDir[1], , , , 0, -1, 1, -1, 0, 0, 0, 0, , NO,
0, 0, NO,
  6074, BEAM   , UNILOAD, GZ, NO , NO, aDir[1], , , , 0, -1, 1, -1, 0, 0, 0, 0, , NO,
0, 0, NO,
  6075, BEAM   , UNILOAD, GZ, NO , NO, aDir[1], , , , 0, -1, 1, -1, 0, 0, 0, 0, , NO,
0, 0, NO,
  6076, BEAM   , UNILOAD, GZ, NO , NO, aDir[1], , , , 0, -1, 1, -1, 0, 0, 0, 0, , NO,
0, 0, NO,
  6077, BEAM   , UNILOAD, GZ, NO , NO, aDir[1], , , , 0, -1, 1, -1, 0, 0, 0, 0, , NO,
0, 0, NO,
  6078, BEAM   , UNILOAD, GZ, NO , NO, aDir[1], , , , 0, -1, 1, -1, 0, 0, 0, 0, , NO,
0, 0, NO,

; End of data for load case [muro] -------------------------

*SFUNCTION    ; Spectrum Function
; FUNC=NAME, iTYPE, iMETHOD, SCALE/MAX, GRAV, DRATIO, DESC, RMF      ; line 1
;   SPEC_CODE, [CODE_DATA]                                            ; line 2
;      PERIOD1, VALUE1, PERIOD2, VALUE2, ...                          ; from line 3
;[CODE_DATA] : NSC, SFI, SC, EQ, TG, DP, MaxEQ
        ; CH2001
;[CODE_DATA] : NSC, SFI, SC, EQ, TG, DP, MaxEQ, nLForce              ; CH2010
;[CODE_DATA] : SFI, SC, EQ, TG, DP, MaxEQ                            ; CHSH2003
;[CODE_DATA] : DIV, SC, SFI, EQ, TG, G                               ; GB50111_2006
;[CODE_DATA] : BT, ZM, ST, SI, SC, TG, CI, CS, CD, EPA, SMAX, PERIOD ; JTG/T B02-01-20
08
;[CODE_DATA] : iSPE, SParam, TB, TC, TD, AG, Q, IF, FPX, FPY         ; P100-1(2013)
   FUNC=Muscoline_T1_C_q=1__CU III, 1, 0, 1, 9.806, 0.05, , 1.000000
   USER
          0.000000,         0.263,   0.007000,         0.282
          0.015000,         0.301,   0.022000,          0.32
```

```
          0.029000,          0.34,   0.037000,         0.359
          0.044000,         0.378,   0.051000,         0.398
          0.059000,         0.417,   0.066000,         0.436
          0.073000,         0.456,   0.081000,         0.475
          0.088000,         0.494,   0.095000,         0.513
          0.103000,         0.533,   0.110000,         0.552
          0.117000,         0.571,   0.125000,         0.591
          0.132000,          0.61,   0.139000,         0.629
          0.147000,         0.648,   0.161000,         0.648
          0.176000,         0.648,   0.191000,         0.648
          0.206000,         0.648,   0.220000,         0.648
          0.235000,         0.648,   0.250000,         0.648
          0.264000,         0.648,   0.279000,         0.648
          0.294000,         0.648,   0.308000,         0.648
          0.323000,         0.648,   0.338000,         0.648
          0.352000,         0.648,   0.367000,         0.648
          0.382000,         0.648,   0.396000,         0.648
          0.411000,         0.648,   0.426000,         0.648
          0.440000,         0.648,   0.535000,         0.534
          0.630000,         0.453,   0.725000,         0.394
          0.820000,         0.349,   0.914000,         0.312
          1.009000,         0.283,   1.104000,         0.259
          1.199000,         0.238,   1.293000,         0.221
          1.388000,         0.206,   1.483000,         0.193
          1.578000,         0.181,   1.672000,         0.171
          1.767000,         0.162,   1.862000,         0.153
          1.957000,         0.146,   2.051000,         0.139
          2.146000,         0.133,   2.241000,         0.127
          2.336000,         0.122,   2.419000,         0.114
          2.502000,         0.107,   2.585000,           0.1
          2.669000,         0.094,   2.752000,         0.088
          2.835000,         0.083,   2.918000,         0.078
          3.001000,         0.074,   3.085000,          0.07
          3.168000,         0.066,   3.251000,         0.063
          3.334000,          0.06,   3.418000,         0.057
          3.501000,         0.054,   3.584000,         0.052
          3.667000,          0.05,   3.750000,         0.047
          3.834000,         0.045,   3.917000,         0.043
          4.000000,         0.042

*SPLDCASE    ; Spectrum Load Cases
; NAME=NAME, DIR, ANGLE, SCALE, PMFT, bDAMP, bECC, INTERP, DESC,       ; line 1
;      COMTYPE, bADDSIGN, iSIGNTYPE, bMODE, bASA, iMAJ                 ; line 2
;      FUNC1, FUNC2, FUNC3, ...                                        ; line 3
;      bUSE1, dFACTOR1, bUSE2, dFACTOR2, ..., bUSEn, dFACTORn          ; line 4      (
bMODE=YES)
;      bCDR, [DR-DC]                                                   ; line 5      (
bDAMP=YES)
;      SMETHOD, bAUTO, ECC, bCONSGL, bTORMOMENT                        ; line 6      (
bECC=YES)
;      STORY1, ECC1, STORY2, ECC2, ..., STORYn, ECCn                   ; from line 7 (
bECC=YES)
; [DR-DC] : iMDTYPE, DALL, iMODE1, DAMPING1, iMODE2, DAMPING2, ...     ; iMDTYPE=1
;         : iMDTYPE, iCOEF, bMASSP, MASSC, bSTIFFP, STIFFC             ; iMDTYPE=2, iC
OEF=1
;         : iMDTYPE, iCOEF, iCALC, bMASSP, FP1, DR1, bSTIFFP, FP2, DR2 ; iMDTYPE=2, iC
OEF=2
;         : iMDTYPE                                                    ; iMDTYPE=3
   NAME=sisma_x, XY, 0, 1, 1, NO, YES, LOG,
        CQC, YES, 0, YES, NO, 0
        Muscoline_T1_C_q=1__CU III
        YES, 1,YES, 1,YES, 1,YES, 1,YES, 1,YES, 1,YES, 1,YES, 1,YES, 1,YES, 1,YES, 1
```

```
        0, YES, 5, YES, NO
        Roof, 0.920562, 1F, 0.920562

   NAME=sisma_y, XY, 90, 1, 1, NO, YES, LOG,
        CQC, YES, 0, YES, NO, 0
        Muscoline_T1_C_q=1__CU III
        YES, 1,YES, 1,YES, 1,YES, 1,YES, 1,YES, 1,YES, 1,YES, 1,YES, 1,YES, 1,YES, 1,YES, 1
        0, YES, 5, YES, NO
        Roof, 1.4175, 1F, 1.4175



*PUSHOVER-CTRL    ; Pushover Global Control
; GEOM, bPERMIT, STEP, iMAX, bDISP, bFORCE, bENERGY, DNORM, FNORM, ENORM, bSTOP, bBEAM
, bWALL, METHOD, bAXIS, bAXISBEAM, bAXISWALL, bAXISTRUSS, SUPPORT, ELASTIC, bSUPPORT,
bSUPPORTUPLIFT, bSUPPORTCOLLAPSE, ; 1st line : Analysis Option
; NODECONNECTIVITY, nBEAMy, nBEAMz, bWALL, nWALLy, nWALLz, dR, WSize, bMEMB, nRCCODE,
bUseRef, bGraph, bCurve ; 1st line(2) : Analysis Option
; bSYMMETRIC, a1(+), a1(-), a2(+), a2(-)                                ; 2nd line : De
fault Stiffness Ratio(Trilinear)
; bSYMMETRIC, a1(+), a1(-)                                              ; 3rd line : De
fault Stiffness Ratio(Bilinear)
; BM_POS, bBUCKLING, bCR_AIJ, bIgnoreElem                               ; 4th line
; BM_POS, bBUCKLING, bCR_AIJ, 1, CF, WAL, bBTL, BTL, bERTH, ERTH, bSBR, SBR, GRP ; 4th
 line (Eurocode)
; BM_POS, bBUCKLING, bCR_AIJ, 2, bAXIAL_AIJ                             ; 4th line (AIJ
)
; LCNAME1, FACT1, LCNAME2, FACT2, ...                                   ; from line 5th
 line  : Initial Load
; LCTYPE1, LCTYPE2, ...                                                 ; Last line
       : Initial Load
   0, YES, 10, 10, YES, NO, NO, 0.001, 0.001, 0.001, NO, YES, NO, 0, NO, YES, NO, NO,
0, 1, NO, NO, NO, 1, 15, 15, NO, EQUAL, 20, 10, 0.4, NO, 0, NO, YES, YES
   YES, 0.1, 0.1, 0.05, 0.05
   YES, 0.05, 0.05
   I, NO, YES, YES, 1, 1, 1.6, NO, 1.6, NO, 0.85, NO, 0.575,
   PP, 1, G1+G2 copertura A, 3.7, G1+G2 copertura B, 1.5, Q sottotetto, 0.3
   sporto gronda, 2, travi, 3, parapetto, 1.5, muro, 4.6
   1, 1, 1, 1, 1, 1, 1, 1
*HINGE-TYPE    ; Pushover Hinge Type/Properties
; NAME=NAME, DESC                                                                        ;
1st line
; ELEM_TYP, WALL_TYP, MAT_TYP, DEFINITION, INTERACTION, bHINGELENGTH, INTEGRATION   ;
2nd line (ELEM_TYP=WALL)
; ELEM_TYP, MAT_TYP, DEFINITION, INTERACTION , bHINGELENGTH, INTEGRATION            ;
2nd line
; HINGE_TYPE, PROP, FIBER, FIBER_AUTO, AUTO_R, R, AUTO_OUTPL, OUTPL                 ;
3rd line
; bFx, HLOC[NSECT], [DISTR], [RAT_I], [RAT_J], SKCV, [M_PROP]   ; 4rd line
; bFy, HLOC[NSECT], [DISTR], [RAT_I], [RAT_J], SKCV, [M_PROP]   ; 5th line
; bFz, HLOC[NSECT], [DISTR], [RAT_I], [RAT_J], SKCV, [M_PROP]   ; 6th line
; bMx, HLOC[NSECT], [DISTR], [RAT_I], [RAT_J], SKCV, [M_PROP]   ; 7th line
; bMy, HLOC[NSECT], [DISTR], [RAT_I], [RAT_J], SKCV, [M_PROP]   ; 8th line
; bMz, HLOC[NSECT], [DISTR], [RAT_I], [RAT_J], SKCV, [M_PROP]   ; 9th line
; CALC, bSYM-IJ, [YSDATA]-I, [YSDATA]-J                  ; 10th line (MAT_TYPE=RC,STEE
L, INTERACTION=PMM)
; BLDG_TYPE, COMP, SHEAR, COEFF                          ; 10th line (MAT_TYPE=MASONRY
,  DEFINITION=PIER)
; COMP, SHEAR, FORC                                      ; 10th line (MAT_TYPE=MASONRY
,  DEFINITION=SPAN)
; [M_PROP] : CALC, TYPE, [PROP]
    ; (SKCV=BI,TRI,SLBI,SLTR)
```

```
; [M_PROP] : CALC, TYPE, bSYM_IJ, [PROP]-I, [PROP]-J
    ; (SKCV=BI,TRI,SLBI,SLTR, HLOC=IJ)
; [M_PROP] : CALC, [FEMA]
    ; (SKCV=FEMA)
; [M_PROP] : CALC, [EC8]
    ; (SKCV=EC8)
; [M_PROP] : CALC, bSYM_IJ, [FEMA]-I  [FEMA]-J
    ; (SKCV=FEMA, HLOC=IJ)
; [PROP] : bSYM, RATIO_OPT, [DATA]-TENS, [DATA]-COMP, STIF_METHOD, STIFF
    ; (SKCV=BI,TRI)
; [PROP] : bSYM, RATIO_OPT, [DATA]-TENS, [DATA]-COMP, STIF_METHOD, STIFF, bAutoSpan, S
PAN ; (SKCV=TRI, RATIO_OPT=AIJ)
; [PROP] : SLIP_TYPE, RATIO_OPT, [DATA]-TENS, [DATA]-COMP, STIF_METHOD, STIFF, IGT, IG
C    ; (SKCV=SLBI,SLTR)
; [DATA] : YS-P1, YS-P2, YS-P3, SRR1, SRR2, SRRy,
    ; (TYPE=RATIO)
; [DATA] : YS-P1, YS-P2, YS-P3, YD-D1, YD-D2, YD-D3
    ; (TYPE=DEFORM)
; [FEMA] : DEFORM, bSYM, bMULT, SUBCOUNT, YS-P1P, YS-P1N, bUSER-D, YD-D1P, YD-D1N,
;        : STIF_METHOD, STIFF, IO-P, LS-P, CP-P, IO-N, LS-N, CP-N, bUSER-RATIO
;        : bSHAPE, SHAPE, bSTRLOSS, STRLOSS, INFILLTYPE, bTOTALSTRLOSS, TOTALSTRLOSS,
UNLOADTYPE, dEXP, dPRFACT, INFILLSTIFF, KMI, KMS, HM, TM
;        : EN-FR, DN-FR, CN-FR, BN-FR, A-FR, BP-FR, CP-FR, DP-FR, EP-FR  ; F/FY or M/M
Y
;        : EN-DR, DN-DR, CN-DR, BN-DR, A-DR, BP-DR, CP-DR, DP-DR, EP-DR  ; D/DY
;        : AXIAL, IO-P, LS-P, CP-P, IO-N, LS-N, CP-N                     ; (bMULT=YES)
, Loop  SUBCOUNT
;        : EN-FR, DN-FR, CN-FR, BN-FR, A-FR, BP-FR, CP-FR, DP-FR, EP-FR  ; (bMULT=YES)
 F/FY or M/MY
;        : EN-DR, DN-DR, CN-DR, BN-DR, A-DR, BP-DR, CP-DR, DP-DR, EP-DR  ; (bMULT=YES)
 D/DY
; [EC8]  : bSYM, bMULT, SUBCOUNT, YS-P1P, YS-P1N, bUSER-D, YD-D1P, YD-D1N,
;        : STIF_METHOD, STIFF-P, STIFF-M, IO-P, LS-P, CP-P, IO-N, LS-N, CP-N, bUSER-RA
TIO
;        : EN-FR, DN-FR, CN-FR, BN-FR, A-FR, BP-FR, CP-FR, DP-FR, EP-FR  ; F/FY or M/M
Y
;        : EN-DR, DN-DR, CN-DR, BN-DR, A-DR, BP-DR, CP-DR, DP-DR, EP-DR  ; D/DY
; [YSDATA] : bSYM-YZ, bSYM-PN, PC0, PMAX,
;          : MY1-P, MY1-N, MY2-P, MY2-N, MZ1-P, MZ1-N, MZ2-P, MZ2-N,
;          : INTPOLATION, ALPHA, bSYM-Y, bSYM-Z, [YSPROP]-1ST,  [YSPROP]-2ND
; [YSPROP] : PY1P, PY2P, PY3P,..., PY10P, PY11P, MY1P, MY2P,..., MY10P, MY11P
;          : PY1N, PY2N, PY3N,..., PY10N, PY11N, MY1N, MY2N,..., MY10N, MY11N
;          : PZ1P, PZ2P, PZ3P,..., PZ10P, PZ11P, MZ1P, MZ2P,..., MZ10P, MZ11P
;          : PZ1N, PZ2N, PZ3N,..., PZ10N, PZ11N, MZ1N, MZ2N,..., MZ10N, MZ11N
  NAME=Maschi MA, Maschi
    BEAM, , MASONRY, PIER, NONE, NO, 0, 0.5, 0.5, 0.5, 0.5, YES
    0, 0, 0, 1, 0, 0.4, 0, NO, NONE
    YES, C, FEMA, USER, \
      D/DY, NO, NO, 1, 1, 1, NO, 0, 0, , ELASTIC, 0, 2, 4, 6, 2, 4, 6, YES, \
      NO, GENERAL, NO, YES, FULL, NO, NO, NO, ORIGIN_ORIENTED, 0.4, 0.5, ELASTIC, 2000
, 500, 1, 1, \
      -1.75, -1.75, -1.75, -1, 0, 5, 5, 5, 5, \
      -0.2, -0.2, -1, -1, 0, 0, 0, 0, 0
    NO
    YES, C, FEMA, USER, \
      D/DY, YES, NO, 1, 1, 1, NO, 0, 0, , ELASTIC, 0, 2, 4, 6, 2, 4, 6, YES, \
      NO, GENERAL, NO, YES, FULL, NO, NO, NO, ORIGIN_ORIENTED, 0.4, 0.5, ELASTIC, 2000
, 500, 1, 1, \
      -0.006, -0.004, -0.004, -0.001, 0, 0.001, 0.004, 0.004, 0.006, \
      -0.3, -0.3, -1.001, -1, 0, 1, 1.001, 0.3, 0.3
    NO
    YES, IJ, FEMA, USER, YES, \
```

```
      D/DY, YES, NO, 1, 1, 1, NO, 0, 0, , 6EI, 0, 2, 4, 6, 2, 4, 6, YES, \
      NO, GENERAL, NO, YES, FULL, NO, NO, NO, ORIGIN_ORIENTED, 0.4, 0.5, ELASTIC, 2000
, 500, 1, 1, \
      -0.009, -0.006, -0.006, -0.001, 0, 0.001, 0.006, 0.006, 0.009, \
      -0.3, -0.3, -1.001, -1, 0, 1, 1.001, 0.3, 0.3, \
      D/DY, YES, NO, 1, 1, 1, NO, 0, 0, , 6EI, 0, 2, 4, 6, 2, 4, 6, YES, \
      NO, GENERAL, NO, YES, FULL, NO, NO, NO, ORIGIN_ORIENTED, 0.4, 0.5, ELASTIC, 2000
, 500, 1, 1, \
      -0.009, -0.006, -0.006, -0.001, 0, 0.001, 0.006, 0.006, 0.009, \
      -0.3, -0.3, -1.001, -1, 0, 1, 1.001, 0.3, 0.3
    NO
    EXIST, 2560, 67, 0.85
  NAME=Pilastri c.a.,
    BEAM, , RC, MTHETA, PMM, NO, 0, 0.5, 0.5, 0.5, 0.5, YES
    0, 0, 0, 1, 0, 0.4, 0, NO, NONE
    YES, IJ, EC8, AUTO, YES, \
      D/DY, NO, NO, 1, 1, 1, NO, 1, 1, 1, ELASTIC, 0, 0, 1.25, 4, 6, 1, 1, 1, NO, \
      NO, GENERAL, NO, YES, FULL, NO, NO, NO, ORIGIN_ORIENTED, 0.4, 0.5, ELASTIC, 2000
, 500, 1, 1, \
      -8, -1.01, -1.01, -1, 0, 1, 6, 6, 8, \
      -0.2, -0.2, -1, -1, 0, 1, 1.001, 0.2, 0.2, \
      D/DY, NO, NO, 1, 1, 1, NO, 1, 1, 1, ELASTIC, 0, 0, 1.25, 4, 6, 1, 1, 1, NO, \
      NO, GENERAL, NO, YES, FULL, NO, NO, NO, ORIGIN_ORIENTED, 0.4, 0.5, ELASTIC, 2000
, 500, 1, 1, \
      -8, -1.01, -1.01, -1, 0, 1, 6, 6, 8, \
      -0.2, -0.2, -1, -1, 0, 1, 1.001, 0.2, 0.2
    YES, IJ, EC8, AUTO, YES, \
      D/DY, NO, NO, 1, 1, 1, NO, 1, 1, , ELASTIC, 0, 0, 1, 1, 1, 1, 1, 1, NO, \
      NO, GENERAL, NO, YES, FULL, NO, NO, NO, ORIGIN_ORIENTED, 0.4, 0.5, ELASTIC, 2000
, 500, 1, 1, \
      -8, -1.01, -1.01, -1, 0, 1, 1.01, 1.01, 8, \
      -0.2, -0.2, -1, -1, 0, 1, 1, 0.2, 0.2, \
      D/DY, NO, NO, 1, 1, 1, NO, 1, 1, , ELASTIC, 0, 0, 1, 1, 1, 1, 1, 1, NO, \
      NO, GENERAL, NO, YES, FULL, NO, NO, NO, ORIGIN_ORIENTED, 0.4, 0.5, ELASTIC, 2000
, 500, 1, 1, \
      -8, -1.01, -1.01, -1, 0, 1, 1.01, 1.01, 8, \
      -0.2, -0.2, -1, -1, 0, 1, 1, 0.2, 0.2
    YES, IJ, EC8, AUTO, YES, \
      D/DY, NO, NO, 1, 1, 1, NO, 1, 1, , ELASTIC, 0, 0, 1, 1, 1, 1, 1, 1, NO, \
      NO, GENERAL, NO, YES, FULL, NO, NO, NO, ORIGIN_ORIENTED, 0.4, 0.5, ELASTIC, 2000
, 500, 1, 1, \
      -8, -1.01, -1.01, -1, 0, 1, 1.01, 1.01, 8, \
      -0.2, -0.2, -1, -1, 0, 1, 1, 0.2, 0.2, \
      D/DY, NO, NO, 1, 1, 1, NO, 1, 1, , ELASTIC, 0, 0, 1, 1, 1, 1, 1, 1, NO, \
      NO, GENERAL, NO, YES, FULL, NO, NO, NO, ORIGIN_ORIENTED, 0.4, 0.5, ELASTIC, 2000
, 500, 1, 1, \
      -8, -1.01, -1.01, -1, 0, 1, 1.01, 1.01, 8, \
      -0.2, -0.2, -1, -1, 0, 1, 1, 0.2, 0.2
    NO
    YES, IJ, EC8, AUTO, YES, \
      D/DY, NO, NO, 1, 1, 1, NO, 1, 1, 1, 6EI, 1, 1, 1, 0.75, 1, 1, 0.75, 1, NO, \
      NO, GENERAL, NO, YES, FULL, NO, NO, NO, ORIGIN_ORIENTED, 0.4, 0.5, ELASTIC, 2000
, 500, 1, 1, \
      -12, -9, -9, -1, 0, 1, 9, 9, 12, \
      -0.2, -0.2, -1.001, -1, 0, 1, 1.001, 0.2, 0.2, \
      D/DY, NO, NO, 1, 1, 1, NO, 1, 1, 1, 6EI, 1, 1, 1, 0.75, 1, 1, 0.75, 1, NO, \
      NO, GENERAL, NO, YES, FULL, NO, NO, NO, ORIGIN_ORIENTED, 0.4, 0.5, ELASTIC, 2000
, 500, 1, 1, \
      -12, -9, -9, -1, 0, 1, 9, 9, 12, \
      -0.2, -0.2, -1.001, -1, 0, 1, 1.001, 0.2, 0.2
    YES, IJ, EC8, AUTO, YES, \
      D/DY, NO, NO, 1, 1, 1, NO, 1, 1, 1, 6EI, 1, 1, 1, 0.75, 1, 1, 0.75, 1, NO, \
```

```
      NO, GENERAL, NO, YES, FULL, NO, NO, NO, ORIGIN_ORIENTED, 0.4, 0.5, ELASTIC, 2000
, 500, 1, 1, \
      -12, -9, -9, -1, 0, 1, 9, 9, 12, \
      -0.2, -0.2, -1.001, -1, 0, 1, 1.001, 0.2, 0.2, \
      D/DY, NO, NO, 1, 1, 1, NO, 1, 1, 1, 6EI, 1, 1, 1, 0.75, 1, 1, 0.75, 1, NO, \
      NO, GENERAL, NO, YES, FULL, NO, NO, NO, ORIGIN_ORIENTED, 0.4, 0.5, ELASTIC, 2000
, 500, 1, 1, \
      -12, -9, -9, -1, 0, 1, 9, 9, 12, \
      -0.2, -0.2, -1.001, -1, 0, 1, 1.001, 0.2, 0.2
    AUTO, YES, NO, YES, 0.5, 1, 0.5, 0.5, 1, 1, 0.5, 0.5, 1, 1, ELLIPSE, 2, YES, YES,
\
      1, 0.8, 0.6, 0.4, 0.2, 0, -0.2, -0.4, -0.6, -0.8, -1, 0, 0.3, 0.6, 0.8, 0.9, 1,
0.9, 0.8, 0.6, 0.3, 0, \
      1, 0.8, 0.6, 0.4, 0.2, 0, -0.2, -0.4, -0.6, -0.8, -1, -0, -0.3, -0.6, -0.8, -0.9
, -1, -0.9, -0.8, -0.6, -0.3, -0, \
      1, 0.8, 0.6, 0.4, 0.2, 0, -0.2, -0.4, -0.6, -0.8, -1, 0, 0.3, 0.6, 0.8, 0.9, 1,
0.9, 0.8, 0.6, 0.3, 0, \
      1, 0.8, 0.6, 0.4, 0.2, 0, -0.2, -0.4, -0.6, -0.8, -1, -0, -0.3, -0.6, -0.8, -0.9
, -1, -0.9, -0.8, -0.6, -0.3, -0, \
      1, 0.8, 0.6, 0.4, 0.2, 0, -0.2, -0.4, -0.6, -0.8, -1, 0, 0.3, 0.6, 0.8, 0.9, 1,
0.9, 0.8, 0.6, 0.3, 0, \
      1, 0.8, 0.6, 0.4, 0.2, 0, -0.2, -0.4, -0.6, -0.8, -1, -0, -0.3, -0.6, -0.8, -0.9
, -1, -0.9, -0.8, -0.6, -0.3, -0, \
      1, 0.8, 0.6, 0.4, 0.2, 0, -0.2, -0.4, -0.6, -0.8, -1, 0, 0.3, 0.6, 0.8, 0.9, 1,
0.9, 0.8, 0.6, 0.3, 0, \
      1, 0.8, 0.6, 0.4, 0.2, 0, -0.2, -0.4, -0.6, -0.8, -1, -0, -0.3, -0.6, -0.8, -0.9
, -1, -0.9, -0.8, -0.6, -0.3, -0 , \
      NO, YES, 0.5, 1, 0.5, 0.5, 1, 1, 0.5, 0.5, 1, 1, ELLIPSE, 2, YES, YES, \
      1, 0.8, 0.6, 0.4, 0.2, 0, -0.2, -0.4, -0.6, -0.8, -1, 0, 0.3, 0.6, 0.8, 0.9, 1,
0.9, 0.8, 0.6, 0.3, 0, \
      1, 0.8, 0.6, 0.4, 0.2, 0, -0.2, -0.4, -0.6, -0.8, -1, -0, -0.3, -0.6, -0.8, -0.9
, -1, -0.9, -0.8, -0.6, -0.3, -0, \
      1, 0.8, 0.6, 0.4, 0.2, 0, -0.2, -0.4, -0.6, -0.8, -1, 0, 0.3, 0.6, 0.8, 0.9, 1,
0.9, 0.8, 0.6, 0.3, 0, \
      1, 0.8, 0.6, 0.4, 0.2, 0, -0.2, -0.4, -0.6, -0.8, -1, -0, -0.3, -0.6, -0.8, -0.9
, -1, -0.9, -0.8, -0.6, -0.3, -0, \
      1, 0.8, 0.6, 0.4, 0.2, 0, -0.2, -0.4, -0.6, -0.8, -1, 0, 0.3, 0.6, 0.8, 0.9, 1,
0.9, 0.8, 0.6, 0.3, 0, \
      1, 0.8, 0.6, 0.4, 0.2, 0, -0.2, -0.4, -0.6, -0.8, -1, -0, -0.3, -0.6, -0.8, -0.9
, -1, -0.9, -0.8, -0.6, -0.3, -0, \
      1, 0.8, 0.6, 0.4, 0.2, 0, -0.2, -0.4, -0.6, -0.8, -1, 0, 0.3, 0.6, 0.8, 0.9, 1,
0.9, 0.8, 0.6, 0.3, 0, \
      1, 0.8, 0.6, 0.4, 0.2, 0, -0.2, -0.4, -0.6, -0.8, -1, -0, -0.3, -0.6, -0.8, -0.9
, -1, -0.9, -0.8, -0.6, -0.3, -0
  NAME=Pilastri fitt MA, Pilastri fitt
    BEAM, , MASONRY, PIER, NONE, NO, 0, 0.5, 0.5, 0.5, 0.5, YES
    0, 0, 0, 1, 0, 0.4, 0, NO, NONE
    YES, C, FEMA, USER, \
      D/DY, NO, NO, 1, 1, 1, NO, 0, 0, , ELASTIC, 0, 2, 4, 6, 2, 4, 6, YES, \
      NO, GENERAL, NO, YES, FULL, NO, NO, NO, ORIGIN_ORIENTED, 0.4, 0.5, ELASTIC, 2000
, 500, 1, 1, \
      -1.75, -1.75, -1.75, -1, 0, 5, 5, 5, 5, \
      -0.2, -0.2, -1, -1, 0, 0, 0, 0, 0
    NO
    NO
    NO
    NO
    NO
    EXIST, 2560, 67, 0.85
  NAME=Fasce MA, Fasce
    BEAM, , MASONRY, SPAN, NONE, NO, 0, 0.5, 0.5, 0.5, 0.5, YES
    0, 0, 0, 1, 0, 0.4, 0, NO, NONE
```

```
    YES, C, FEMA, USER, \
      D/DY, NO, NO, 1, 1, 1, NO, 0, 0, , ELASTIC, 0, 2, 4, 6, 2, 4, 6, YES, \
      NO, GENERAL, NO, YES, FULL, NO, NO, NO, ORIGIN_ORIENTED, 0.4, 0.5, ELASTIC, 2000
, 500, 1, 1, \
      -1.75, -1.75, -1.75, -1, 0, 5, 5, 5, 5, \
      -0.2, -0.2, -1, -1, 0, 0, 0, 0, 0
    NO
    YES, C, FEMA, USER, \
      D/DY, YES, NO, 1, 1, 1, NO, 0, 0, , ELASTIC, 0, 2, 4, 6, 2, 4, 6, YES, \
      NO, GENERAL, NO, YES, FULL, NO, NO, NO, ORIGIN_ORIENTED, 0.4, 0.5, ELASTIC, 2000
, 500, 1, 1, \
      -0.006, -0.004, -0.004, -0.001, 0, 0.001, 0.004, 0.004, 0.006, \
      -0.3, -0.3, -1.001, -1, 0, 1, 1.001, 0.3, 0.3
    NO
    YES, IJ, FEMA, USER, YES, \
      D/DY, YES, NO, 1, 1, 1, NO, 0, 0, , 6EI, 0, 2, 4, 6, 2, 4, 6, YES, \
      NO, GENERAL, NO, YES, FULL, NO, NO, NO, ORIGIN_ORIENTED, 0.4, 0.5, ELASTIC, 2000
, 500, 1, 1, \
      -0.012, -0.008, -0.008, -0.001, 0, 0.001, 0.008, 0.008, 0.012, \
      -0.3, -0.3, -1.001, -1, 0, 1, 1.001, 0.3, 0.3, \
      D/DY, YES, NO, 1, 1, 1, NO, 0, 0, , 6EI, 0, 2, 4, 6, 2, 4, 6, YES, \
      NO, GENERAL, NO, YES, FULL, NO, NO, NO, ORIGIN_ORIENTED, 0.4, 0.5, ELASTIC, 2000
, 500, 1, 1, \
      -0.012, -0.008, -0.008, -0.001, 0, 0.001, 0.008, 0.008, 0.012, \
      -0.3, -0.3, -1.001, -1, 0, 1, 1.001, 0.3, 0.3
    NO
    2560, 67, 80
  NAME=Maschi MB, Maschi
    BEAM, , MASONRY, PIER, NONE, NO, 0, 0.5, 0.5, 0.5, 0.5, YES
    0, 0, 0, 1, 0, 0.4, 0, NO, NONE
    YES, C, FEMA, USER, \
      D/DY, NO, NO, 1, 1, 1, NO, 0, 0, , ELASTIC, 0, 2, 4, 6, 2, 4, 6, YES, \
      NO, GENERAL, NO, YES, FULL, NO, NO, NO, ORIGIN_ORIENTED, 0.4, 0.5, ELASTIC, 2000
, 500, 1, 1, \
      -1.75, -1.75, -1.75, -1, 0, 5, 5, 5, 5, \
      -0.2, -0.2, -1, -1, 0, 0, 0, 0, 0
    NO
    YES, C, FEMA, USER, \
      D/DY, YES, NO, 1, 1, 1, NO, 0, 0, , ELASTIC, 0, 2, 4, 6, 2, 4, 6, YES, \
      NO, GENERAL, NO, YES, FULL, NO, NO, NO, ORIGIN_ORIENTED, 0.4, 0.5, ELASTIC, 2000
, 500, 1, 1, \
      -0.006, -0.004, -0.004, -0.001, 0, 0.001, 0.004, 0.004, 0.006, \
      -0.3, -0.3, -1.001, -1, 0, 1, 1.001, 0.3, 0.3
    NO
    YES, IJ, FEMA, USER, YES, \
      D/DY, YES, NO, 1, 1, 1, NO, 0, 0, , 6EI, 0, 2, 4, 6, 2, 4, 6, YES, \
      NO, GENERAL, NO, YES, FULL, NO, NO, NO, ORIGIN_ORIENTED, 0.4, 0.5, ELASTIC, 2000
, 500, 1, 1, \
      -0.009, -0.006, -0.006, -0.001, 0, 0.001, 0.006, 0.006, 0.009, \
      -0.3, -0.3, -1.001, -1, 0, 1, 1.001, 0.3, 0.3, \
      D/DY, YES, NO, 1, 1, 1, NO, 0, 0, , 6EI, 0, 2, 4, 6, 2, 4, 6, YES, \
      NO, GENERAL, NO, YES, FULL, NO, NO, NO, ORIGIN_ORIENTED, 0.4, 0.5, ELASTIC, 2000
, 500, 1, 1, \
      -0.009, -0.006, -0.006, -0.001, 0, 0.001, 0.006, 0.006, 0.009, \
      -0.3, -0.3, -1.001, -1, 0, 1, 1.001, 0.3, 0.3
    NO
    EXIST, 3700, 259, 0.85
  NAME=Pilastri fitt MB, Pilastri fitt
    BEAM, , MASONRY, PIER, NONE, NO, 0, 0.5, 0.5, 0.5, 0.5, YES
    0, 0, 0, 1, 0, 0.4, 0, NO, NONE
    YES, C, FEMA, USER, \
      D/DY, NO, NO, 1, 1, 1, NO, 0, 0, , ELASTIC, 0, 2, 4, 6, 2, 4, 6, YES, \
```

```
      NO, GENERAL, NO, YES, FULL, NO, NO, NO, ORIGIN_ORIENTED, 0.4, 0.5, ELASTIC, 2000
, 500, 1, 1, \
      -1.75, -1.75, -1.75, -1, 0, 5, 5, 5, 5, \
      -0.2, -0.2, -1, -1, 0, 0, 0, 0, 0
    NO
    NO
    NO
    NO
    NO
    EXIST, 3700, 259, 0.85
  NAME=Fasce MB, Fasce
    BEAM, , MASONRY, SPAN, NONE, NO, 0, 0.5, 0.5, 0.5, 0.5, YES
    0, 0, 0, 1, 0, 0.4, 0, NO, NONE
    YES, C, FEMA, USER, \
      D/DY, NO, NO, 1, 1, 1, NO, 0, 0, , ELASTIC, 0, 2, 4, 6, 2, 4, 6, YES, \
      NO, GENERAL, NO, YES, FULL, NO, NO, NO, ORIGIN_ORIENTED, 0.4, 0.5, ELASTIC, 2000
, 500, 1, 1, \
      -1.75, -1.75, -1.75, -1, 0, 5, 5, 5, 5, \
      -0.2, -0.2, -1, -1, 0, 0, 0, 0, 0
    NO
    YES, C, FEMA, USER, \
      D/DY, YES, NO, 1, 1, 1, NO, 0, 0, , ELASTIC, 0, 2, 4, 6, 2, 4, 6, YES, \
      NO, GENERAL, NO, YES, FULL, NO, NO, NO, ORIGIN_ORIENTED, 0.4, 0.5, ELASTIC, 2000
, 500, 1, 1, \
      -0.006, -0.004, -0.004, -0.001, 0, 0.001, 0.004, 0.004, 0.006, \
      -0.3, -0.3, -1.001, -1, 0, 1, 1.001, 0.3, 0.3
    NO
    YES, IJ, FEMA, USER, YES, \
      D/DY, YES, NO, 1, 1, 1, NO, 0, 0, , 6EI, 0, 2, 4, 6, 2, 4, 6, YES, \
      NO, GENERAL, NO, YES, FULL, NO, NO, NO, ORIGIN_ORIENTED, 0.4, 0.5, ELASTIC, 2000
, 500, 1, 1, \
      -0.012, -0.008, -0.008, -0.001, 0, 0.001, 0.008, 0.008, 0.012, \
      -0.3, -0.3, -1.001, -1, 0, 1, 1.001, 0.3, 0.3, \
      D/DY, YES, NO, 1, 1, 1, NO, 0, 0, , 6EI, 0, 2, 4, 6, 2, 4, 6, YES, \
      NO, GENERAL, NO, YES, FULL, NO, NO, NO, ORIGIN_ORIENTED, 0.4, 0.5, ELASTIC, 2000
, 500, 1, 1, \
      -0.012, -0.008, -0.008, -0.001, 0, 0.001, 0.008, 0.008, 0.012, \
      -0.3, -0.3, -1.001, -1, 0, 1, 1.001, 0.3, 0.3
    NO
    3700, 259, 80
  NAME=Maschi MA int, Maschi
    BEAM, , MASONRY, PIER, NONE, NO, 0, 0.5, 0.5, 0.5, 0.5, YES
    0, 0, 0, 1, 0, 0.4, 0, NO, NONE
    YES, C, FEMA, USER, \
      D/DY, NO, NO, 1, 1, 1, NO, 0, 0, , ELASTIC, 0, 2, 4, 6, 2, 4, 6, YES, \
      NO, GENERAL, NO, YES, FULL, NO, NO, NO, ORIGIN_ORIENTED, 0.4, 0.5, ELASTIC, 2000
, 500, 1, 1, \
      -1.75, -1.75, -1.75, -1, 0, 5, 5, 5, 5, \
      -0.2, -0.2, -1, -1, 0, 0, 0, 0, 0
    NO
    YES, C, FEMA, USER, \
      D/DY, YES, NO, 1, 1, 1, NO, 0, 0, , ELASTIC, 0, 2, 4, 6, 2, 4, 6, YES, \
      NO, GENERAL, NO, YES, FULL, NO, NO, NO, ORIGIN_ORIENTED, 0.4, 0.5, ELASTIC, 2000
, 500, 1, 1, \
      -0.006, -0.004, -0.004, -0.001, 0, 0.001, 0.004, 0.004, 0.006, \
      -0.3, -0.3, -1.001, -1, 0, 1, 1.001, 0.3, 0.3
    NO
    YES, IJ, FEMA, USER, YES, \
      D/DY, YES, NO, 1, 1, 1, NO, 0, 0, , 6EI, 0, 2, 4, 6, 2, 4, 6, YES, \
      NO, GENERAL, NO, YES, FULL, NO, NO, NO, ORIGIN_ORIENTED, 0.4, 0.5, ELASTIC, 2000
, 500, 1, 1, \
      -0.009, -0.006, -0.006, -0.001, 0, 0.001, 0.006, 0.006, 0.009, \
```

```
      -0.3, -0.3, -1.001, -1, 0, 1, 1.001, 0.3, 0.3, \
      D/DY, YES, NO, 1, 1, 1, NO, 0, 0, , 6EI, 0, 2, 4, 6, 2, 4, 6, YES, \
      NO, GENERAL, NO, YES, FULL, NO, NO, NO, ORIGIN_ORIENTED, 0.4, 0.5, ELASTIC, 2000
, 500, 1, 1, \
      -0.009, -0.006, -0.006, -0.001, 0, 0.001, 0.006, 0.006, 0.009, \
      -0.3, -0.3, -1.001, -1, 0, 1, 1.001, 0.3, 0.3
    NO
    EXIST, 3840, 100.5, 0.85
  NAME=Pilastri fitt MA int, Pilastri fitt
    BEAM, , MASONRY, PIER, NONE, NO, 0, 0.5, 0.5, 0.5, 0.5, YES
    0, 0, 0, 1, 0, 0.4, 0, NO, NONE
    YES, C, FEMA, USER, \
      D/DY, NO, NO, 1, 1, 1, NO, 0, 0, , ELASTIC, 0, 2, 4, 6, 2, 4, 6, YES, \
      NO, GENERAL, NO, YES, FULL, NO, NO, NO, ORIGIN_ORIENTED, 0.4, 0.5, ELASTIC, 2000
, 500, 1, 1, \
      -1.75, -1.75, -1.75, -1, 0, 5, 5, 5, 5, \
      -0.2, -0.2, -1, -1, 0, 0, 0, 0, 0
    NO
    NO
    NO
    NO
    NO
    EXIST, 3840, 100.5, 0.85
  NAME=catene,
    TRUSS, , STEEL, MTHETA, NONE, NO, 0, 0.5, 0.5, 0.5, 0.5, YES
    0, 0, 0, 1, 0, 0.4, 0, NO, NONE
    YES, C, EC8, AUTO, \
      D/DY, NO, NO, 1, 1, 1, NO, 1, 1, 1, ELASTIC, 0, 0, 1.25, 8, 10, 0.25, 4, 6, NO,
\
      NO, GENERAL, NO, YES, FULL, NO, NO, NO, ORIGIN_ORIENTED, 0.4, 0.5, ELASTIC, 2000
, 500, 1, 1, \
      -12, -1.01, -1.01, -1, 0, 1, 10, 10, 12, \
      -0.2, -0.2, -1.001, -1, 0, 1, 1.001, 0.2, 0.2
    NO
    NO
    NO
    NO
    NO

*HINGE-ASSIGN    ; Assign Pushover Hinge
; TYPE=TYPE NAME, ELEM NO(GLINK_NO), HINGE_TYP, FIBER_KEY  ; 1st line
  TYPE=BEAM, 9, Maschi MA, 0
  TYPE=BEAM, 10, Maschi MA, 0
  TYPE=BEAM, 12, Maschi MB, 0
  TYPE=BEAM, 18, Maschi MA, 0
  TYPE=BEAM, 24, Maschi MB, 0
  TYPE=BEAM, 26, Maschi MA, 0
  TYPE=BEAM, 27, Maschi MB, 0
  TYPE=BEAM, 30, Maschi MA, 0
  TYPE=BEAM, 33, Maschi MB, 0
  TYPE=BEAM, 34, Maschi MA, 0
  TYPE=BEAM, 39, Maschi MA, 0
  TYPE=BEAM, 40, Maschi MA, 0
  TYPE=BEAM, 41, Maschi MA int, 0
  TYPE=BEAM, 42, Maschi MA, 0
  TYPE=BEAM, 43, Maschi MA int, 0
  TYPE=BEAM, 44, Maschi MA int, 0
  TYPE=BEAM, 45, Maschi MA, 0
  TYPE=BEAM, 46, Maschi MA, 0
  TYPE=BEAM, 47, Maschi MA, 0
  TYPE=BEAM, 48, Maschi MA, 0
  TYPE=BEAM, 49, Maschi MB, 0
```

```
  TYPE=BEAM, 50, Maschi MA, 0
  TYPE=BEAM, 51, Maschi MA, 0
  TYPE=BEAM, 52, Maschi MA, 0
  TYPE=BEAM, 53, Maschi MB, 0
  TYPE=BEAM, 54, Maschi MA int, 0
  TYPE=BEAM, 55, Pilastri fitt MA int, 0
  TYPE=BEAM, 56, Maschi MA, 0
  TYPE=BEAM, 57, Maschi MA, 0
  TYPE=BEAM, 58, Maschi MA, 0
  TYPE=BEAM, 59, Maschi MA, 0
  TYPE=BEAM, 60, Maschi MA, 0
  TYPE=BEAM, 61, Maschi MA, 0
  TYPE=BEAM, 62, Maschi MA, 0
  TYPE=BEAM, 2001, Pilastri fitt MB, 0
  TYPE=BEAM, 2002, Pilastri fitt MA int, 0
  TYPE=BEAM, 2003, Pilastri fitt MB, 0
  TYPE=BEAM, 2006, Pilastri fitt MA, 0
  TYPE=BEAM, 2007, Pilastri fitt MA, 0
  TYPE=BEAM, 2009, Pilastri fitt MA int, 0
  TYPE=BEAM, 2010, Pilastri fitt MA, 0
  TYPE=BEAM, 2013, Pilastri fitt MA int, 0
  TYPE=BEAM, 2014, Pilastri fitt MB, 0
  TYPE=BEAM, 2015, Pilastri fitt MA, 0
  TYPE=BEAM, 2016, Pilastri fitt MA, 0
  TYPE=BEAM, 2017, Pilastri fitt MA, 0
  TYPE=BEAM, 2018, Pilastri fitt MA, 0
  TYPE=BEAM, 6111, Maschi MA, 0
  TYPE=BEAM, 6113, Maschi MA int, 0
  TYPE=BEAM, 6143, Fasce MB, 0
  TYPE=BEAM, 6145, Fasce MB, 0
  TYPE=BEAM, 6147, Fasce MB, 0
  TYPE=BEAM, 6148, Fasce MB, 0
  TYPE=BEAM, 6227, Fasce MA, 0
  TYPE=BEAM, 6230, Fasce MA, 0
  TYPE=BEAM, 6236, Fasce MA, 0
  TYPE=BEAM, 6276, Fasce MA, 0
  TYPE=BEAM, 6278, Fasce MA, 0
  TYPE=BEAM, 6279, Fasce MA, 0
  TYPE=BEAM, 6282, Fasce MA, 0
  TYPE=BEAM, 6283, Fasce MA, 0
  TYPE=BEAM, 6285, Fasce MA, 0
  TYPE=BEAM, 6288, Fasce MA, 0
  TYPE=BEAM, 6291, Fasce MA, 0
  TYPE=BEAM, 6292, Fasce MA, 0
  TYPE=BEAM, 6294, Fasce MA, 0

*PUSHOVER-LOAD   ; Pushover Load Cases
; NAME=NAME, DESC,                                  ; 1st line
; STEP, bUSEINILOAD, bPDELTA, METHOD, bREAC, bDISP  ; 2nd line
; CTRL_OPT, INC_FUNCTION, ANAL_RATIO                ; 3rd line (METHOD=LOAD)
; CTRL_OPT, DISPL                                   ; 3rd line (METHOD=DISP, CTRL_OPT=
GLOBAL)
; CTRL_OPT, MNODE, DIR, DISPL                       ; 3rd line (METHOD=DISP, CTRL_OPT=
MNODE)
; bANAL_LIMIT, VALUE, LOAD_PATTERN                  ; 4th line
; DIR, SCALE                                        ; 5th line (LOAD_PATTERN=UNIFORM)
; MODE, SCALE                                       ; 5th line (LOAD_PATTERN=MODE)
; LCNAME1, SCALE1, LCNAME2, SCALE2, ...             ; from 5th line (LOAD_PATTERN=STAT
IC)
   NAME=GU1 +X,
        300, YES, NO, DISP, YES, NO, NO, 20
        MNODE, 194, DX, 0.02
```

```
        NO, 10, STATIC, YES, NO, NO, 10, 10
        SISMA X, 1
   NAME=GU1 -X,
        200, YES, NO, DISP, YES, NO, NO, 20
        MNODE, 194, DX, -0.03
        NO, 10, STATIC, YES, NO, NO, 10, 10
        SISMA X, -1
   NAME=GU1 +Y,
        200, YES, NO, DISP, YES, NO, NO, 20
        MNODE, 200, DY, 0.03
        NO, 10, STATIC, YES, NO, NO, 10, 10
        SISMA Y, 1
   NAME=GU1 -Y,
        200, YES, NO, DISP, YES, NO, NO, 20
        MNODE, 200, DY, -0.03
        NO, 10, STATIC, YES, NO, NO, 10, 10
        SISMA Y, -1
   NAME=GU2 +X,
        300, YES, NO, DISP, YES, NO, NO, 20
        MNODE, 195, DX, 0.01
        NO, 10, UNIFORM, YES, NO, NO, 10, 10
        DX, 1
   NAME=GU2 -X,
        200, YES, NO, DISP, YES, NO, NO, 20
        MNODE, 195, DX, -0.03
        NO, 10, UNIFORM, YES, NO, NO, 10, 10
        DX, -1
   NAME=GU2 +Y,
        200, YES, NO, DISP, YES, NO, NO, 20
        MNODE, 195, DY, 0.03
        NO, 10, UNIFORM, YES, NO, NO, 10, 10
        DY, 1
   NAME=GU2 -Y,
        200, YES, NO, DISP, YES, NO, NO, 20
        MNODE, 195, DY, -0.03
        NO, 10, UNIFORM, YES, NO, NO, 10, 10
        DY, -1

*LOADCOMB    ; Combinations
; NAME=NAME, KIND, ACTIVE, bES, iTYPE, DESC, iSERV-TYPE, nLCOMTYPE   ; line 1
;      ANAL1, LCNAME1, FACT1, ...                                    ; from line 2
   NAME=SISMA V, CONC, STRENGTH, 0, 0, , 0, 0
        ST, PP, 1, ST, G1+G2 copertura A, 3.7, ST, G1+G2 copertura B, 1.5
        ST, Q sottotetto, 0.3, ST, sporto gronda, 2, ST, travi, 3
        ST, parapetto, 1.5, ST, muro, 4.6
   NAME=sisma_1, CONC, STRENGTH, 0, 0, , 0, 0
        RS, sisma_x, 1, RS, sisma_y, 0.3, ES, sisma_x, 1, ES, sisma_y, 0.3
        CBC, SISMA V, 1
   NAME=sisma_2, CONC, STRENGTH, 0, 0, , 0, 0
        RS, sisma_x, 1, RS, sisma_y, 0.3, ES, sisma_x, 1, ES, sisma_y, -0.3
        CBC, SISMA V, 1
   NAME=sisma_3, CONC, STRENGTH, 0, 0, , 0, 0
        RS, sisma_x, 1, RS, sisma_y, 0.3, ES, sisma_x, -1, ES, sisma_y, 0.3
        CBC, SISMA V, 1
   NAME=sisma_4, CONC, STRENGTH, 0, 0, , 0, 0
        RS, sisma_x, 1, RS, sisma_y, 0.3, ES, sisma_x, -1, ES, sisma_y, -0.3
        CBC, SISMA V, 1
   NAME=sisma_5, CONC, STRENGTH, 0, 0, , 0, 0
        RS, sisma_x, 1, RS, sisma_y, -0.3, ES, sisma_x, 1, ES, sisma_y, 0.3
        CBC, SISMA V, 1
   NAME=sisma_6, CONC, STRENGTH, 0, 0, , 0, 0
        RS, sisma_x, 1, RS, sisma_y, -0.3, ES, sisma_x, 1, ES, sisma_y, -0.3
```

```
     CBC, SISMA V, 1
NAME=sisma_7, CONC, STRENGTH, 0, 0, , 0, 0
     RS, sisma_x, 1, RS, sisma_y, -0.3, ES, sisma_x, -1, ES, sisma_y, 0.3
     CBC, SISMA V, 1
NAME=sisma_8, CONC, STRENGTH, 0, 0, , 0, 0
     RS, sisma_x, 1, RS, sisma_y, -0.3, ES, sisma_x, -1, ES, sisma_y, -0.3
     CBC, SISMA V, 1
NAME=sisma_9, CONC, STRENGTH, 0, 0, , 0, 0
     RS, sisma_x, -1, RS, sisma_y, 0.3, ES, sisma_x, 1, ES, sisma_y, 0.3
     CBC, SISMA V, 1
NAME=sisma_10, CONC, STRENGTH, 0, 0, , 0, 0
     RS, sisma_x, -1, RS, sisma_y, 0.3, ES, sisma_x, 1, ES, sisma_y, -0.3
     CBC, SISMA V, 1
NAME=sisma_11, CONC, STRENGTH, 0, 0, , 0, 0
     RS, sisma_x, -1, RS, sisma_y, 0.3, ES, sisma_x, -1, ES, sisma_y, 0.3
     CBC, SISMA V, 1
NAME=sisma_12, CONC, STRENGTH, 0, 0, , 0, 0
     RS, sisma_x, -1, RS, sisma_y, 0.3, ES, sisma_x, -1, ES, sisma_y, -0.3
     CBC, SISMA V, 1
NAME=sisma_13, CONC, STRENGTH, 0, 0, , 0, 0
     RS, sisma_x, -1, RS, sisma_y, -0.3, ES, sisma_x, 1, ES, sisma_y, 0.3
     CBC, SISMA V, 1
NAME=sisma_14, CONC, STRENGTH, 0, 0, , 0, 0
     RS, sisma_x, -1, RS, sisma_y, -0.3, ES, sisma_x, 1, ES, sisma_y, -0.3
     CBC, SISMA V, 1
NAME=sisma_15, CONC, STRENGTH, 0, 0, , 0, 0
     RS, sisma_x, -1, RS, sisma_y, -0.3, ES, sisma_x, -1, ES, sisma_y, 0.3
     CBC, SISMA V, 1
NAME=sisma_16, CONC, STRENGTH, 0, 0, , 0, 0
     RS, sisma_x, -1, RS, sisma_y, -0.3, ES, sisma_x, -1, ES, sisma_y, -0.3
     CBC, SISMA V, 1
NAME=sisma_17, CONC, STRENGTH, 0, 0, , 0, 0
     RS, sisma_x, 0.3, RS, sisma_y, 1, ES, sisma_x, 0.3, ES, sisma_y, 1
     CBC, SISMA V, 1
NAME=sisma 18, CONC, STRENGTH, 0, 0, , 0, 0
     RS, sisma_x, 0.3, RS, sisma_y, 1, ES, sisma_x, -0.3, ES, sisma_y, 1
     CBC, SISMA V, 1
NAME=sisma_19, CONC, STRENGTH, 0, 0, , 0, 0
     RS, sisma_x, 0.3, RS, sisma_y, 1, ES, sisma_x, 0.3, ES, sisma_y, -1
     CBC, SISMA V, 1
NAME=sisma 20, CONC, STRENGTH, 0, 0, , 0, 0
     RS, sisma_x, 0.3, RS, sisma_y, 1, ES, sisma_x, -0.3, ES, sisma_y, -1
     CBC, SISMA V, 1
NAME=sisma_21, CONC, STRENGTH, 0, 0, , 0, 0
     RS, sisma_x, -0.3, RS, sisma_y, 1, ES, sisma_x, 0.3, ES, sisma_y, 1
     CBC, SISMA V, 1
NAME=sisma_22, CONC, STRENGTH, 0, 0, , 0, 0
     RS, sisma_x, -0.3, RS, sisma_y, 1, ES, sisma_x, -0.3, ES, sisma_y, 1
     CBC, SISMA V, 1
NAME=sisma_23, CONC, STRENGTH, 0, 0, , 0, 0
     RS, sisma_x, -0.3, RS, sisma_y, 1, ES, sisma_x, 0.3, ES, sisma_y, -1
     CBC, SISMA V, 1
NAME=sisma_24, CONC, STRENGTH, 0, 0, , 0, 0
     RS, sisma_x, -0.3, RS, sisma_y, 1, ES, sisma_x, -0.3, ES, sisma_y, -1
     CBC, SISMA V, 1
NAME=sisma_25, CONC, STRENGTH, 0, 0, , 0, 0
     RS, sisma_x, 0.3, RS, sisma_y, -1, ES, sisma_x, 0.3, ES, sisma_y, 1
     CBC, SISMA V, 1
NAME=sisma_26, CONC, STRENGTH, 0, 0, , 0, 0
     RS, sisma_x, 0.3, RS, sisma_y, -1, ES, sisma_x, -0.3, ES, sisma_y, 1
     CBC, SISMA V, 1
NAME=sisma_27, CONC, STRENGTH, 0, 0, , 0, 0
```

```
        RS, sisma_x, 0.3, RS, sisma_y, -1, ES, sisma_x, 0.3, ES, sisma_y, -1
        CBC, SISMA V, 1
   NAME=sisma_28, CONC, STRENGTH, 0, 0, , 0, 0
        RS, sisma_x, 0.3, RS, sisma_y, -1, ES, sisma_x, -0.3, ES, sisma_y, -1
        CBC, SISMA V, 1
   NAME=sisma_29, CONC, STRENGTH, 0, 0, , 0, 0
        RS, sisma_x, -0.3, RS, sisma_y, -1, ES, sisma_x, 0.3, ES, sisma_y, 1
        CBC, SISMA V, 1
   NAME=sisma_30, CONC, STRENGTH, 0, 0, , 0, 0
        RS, sisma_x, -0.3, RS, sisma_y, -1, ES, sisma_x, -0.3, ES, sisma_y, 1
        CBC, SISMA V, 1
   NAME=sisma_31, CONC, STRENGTH, 0, 0, , 0, 0
        RS, sisma_x, -0.3, RS, sisma_y, -1, ES, sisma_x, 0.3, ES, sisma_y, -1
        CBC, SISMA V, 1
   NAME=sisma_32, CONC, STRENGTH, 0, 0, , 0, 0
        RS, sisma_x, -0.3, RS, sisma_y, -1, ES, sisma_x, -0.3, ES, sisma_y, -1
        CBC, SISMA V, 1
   NAME=ENVELOPE, CONC, SPECIAL, 0, 1, , 0, 0
        CBC, sisma_1, 1, CBC, sisma_2, 1, CBC, sisma_3, 1, CBC, sisma_4, 1
        CBC, sisma_5, 1, CBC, sisma_6, 1, CBC, sisma_7, 1, CBC, sisma_8, 1
        CBC, sisma_9, 1, CBC, sisma_10, 1, CBC, sisma_11, 1, CBC, sisma_12, 1
        CBC, sisma_13, 1, CBC, sisma_14, 1, CBC, sisma_15, 1, CBC, sisma_16, 1
        CBC, sisma_17, 1, CBC, sisma_18, 1, CBC, sisma_19, 1, CBC, sisma_20, 1
        CBC, sisma_21, 1, CBC, sisma_22, 1, CBC, sisma_23, 1, CBC, sisma_24, 1
        CBC, sisma_25, 1, CBC, sisma_26, 1, CBC, sisma_27, 1, CBC, sisma_28, 1
        CBC, sisma_29, 1, CBC, sisma_30, 1, CBC, sisma_31, 1, CBC, sisma_32, 1
   NAME=SLU, CONC, INACTIVE, 0, 0, , 0, 0
        ST, PP, 1.3, ST, G1+G2 copertura A, 4.81, ST, G1+G2 copertura B, 1.95
        ST, Q sottotetto, 0.75, ST, sporto gronda, 2.6, ST, Q neve, 1.86
        ST, travi, 3.9, ST, parapetto, 2.25, ST, muro, 5.98

*BLDG-CTRL    ; Building Control Data
; bBASE, LEVEL, bMASS, bSSFR, bSTORMDUL, bSRTH, iSRTHOPT, [EccenRatio], bLATFLEX ; lin
e 1
; LCNAME1, FACT1, LCNAME2, FACT2, ...                                              ; fro
m line 2
; [EccenRatio] : bCENTER
; bCENTER=NO
; [EccenRatio] : bCENTER, XDLC, YDLC, USE                                           ; bC
ENTER=YES, USE=MASS
; [EccenRatio] : bCENTER, XDLC, YDLC, USE                                          ; bCE
NTER=YES, USE=AXIAL
; [EccenRatio] : bCENTER, XDLC, YDLC, USE, SLCX, SLCY                              ; bCE
NTER=YES, USE=SHEAR
   YES, -1, YES, YES, NO, NO, 0, NO, , , AXIAL, YES

*LC-COLOR    ; Diagram Color for Load Case
; ANAL, LCNAME, iR1(ALL), iG1(ALL), iB1(ALL), iR2(MIN), iG2(MIN), iB2(MIN), iR3(MAX),
iG2(MAX), iB2(MAX)
 ST, parapetto, 0, 128, 57, 192, 0, 128, 192, 0, 128
 ST, PP, 78, 0, 255, 255, 160, 255, 163, 255, 160
 PO, GU1 +X, 210, 210, 210, 163, 160, 255, 192, 192, 192
 PO, GU1 -X, 255, 255, 255, 0, 192, 128, 255, 192, 87
 PO, GU1 +Y, 192, 0, 128, 255, 0, 192, 255, 160, 255
 CBC, SISMA V, 212, 160, 255, 148, 87, 255, 148, 87, 255
 CBC, sisma_1, 160, 192, 255, 255, 192, 160, 0, 128, 192
 PO, GU1 -Y, 0, 157, 192, 255, 160, 255, 93, 255, 87
 CBC, sisma_2, 255, 255, 87, 192, 0, 128, 255, 87, 128
 RS, sisma_x, 0, 128, 57, 192, 128, 0, 163, 255, 160
 ES, sisma_x, 0, 157, 192, 78, 0, 255, 163, 255, 160
 RS, sisma_y, 192, 0, 128, 163, 160, 255, 163, 255, 160
 ES, sisma_y, 192, 72, 0, 255, 87, 128, 210, 210, 210
```

```
 CBC, sisma_3, 0, 128, 57, 192, 72, 0, 192, 0, 128
 CBC, sisma_4, 160, 255, 255, 255, 160, 255, 163, 255, 160
 CBC, sisma_5, 0, 128, 192, 0, 192, 192, 163, 160, 255
 CBC, sisma_6, 255, 192, 87, 192, 128, 0, 255, 128, 0
 CBC, sisma_7, 0, 192, 192, 255, 0, 192, 255, 128, 0
 CBC, sisma_8, 146, 0, 255, 0, 128, 255, 255, 192, 87
 CBC, sisma_9, 78, 0, 255, 0, 192, 128, 128, 192, 0
 CBC, sisma_10, 192, 72, 0, 192, 128, 0, 255, 128, 0
 CBC, sisma_11, 255, 192, 160, 192, 0, 192, 0, 128, 57
 CBC, sisma_12, 192, 0, 128, 146, 0, 255, 255, 255, 255
 CBC, sisma_13, 255, 0, 128, 78, 0, 255, 212, 160, 255
 CBC, sisma_14, 255, 87, 87, 85, 192, 0, 146, 0, 255
 CBC, sisma_15, 0, 128, 128, 255, 160, 255, 255, 128, 0
 CBC, sisma_16, 163, 255, 160, 0, 128, 57, 160, 192, 255
 CBC, sisma_17, 192, 0, 192, 160, 192, 255, 192, 72, 0
 CBC, sisma_18, 148, 87, 255, 192, 0, 192, 255, 160, 255
 CBC, sisma_19, 0, 128, 192, 212, 160, 255, 0, 128, 128
 CBC, sisma_20, 192, 192, 0, 192, 0, 128, 78, 0, 255
 CBC, sisma_21, 0, 192, 128, 0, 128, 128, 255, 255, 87
 CBC, sisma_22, 78, 0, 255, 192, 128, 0, 192, 128, 0
 CBC, sisma_23, 255, 0, 128, 255, 128, 0, 0, 128, 57
 CBC, sisma_24, 192, 72, 0, 210, 210, 210, 163, 255, 160
 CBC, sisma_25, 192, 192, 0, 148, 87, 255, 0, 128, 255
 CBC, sisma_26, 146, 0, 255, 192, 0, 128, 0, 192, 128
 CBC, sisma_27, 163, 255, 160, 255, 255, 255, 78, 0, 255
 CBC, sisma_28, 148, 87, 255, 255, 255, 255, 85, 0, 192
 CBC, sisma_29, 255, 160, 255, 255, 192, 87, 85, 192, 0
 CBC, sisma_30, 192, 192, 192, 192, 192, 0, 192, 0, 192
 CBC, sisma_31, 85, 0, 192, 85, 0, 192, 255, 160, 255
 CBC, sisma_32, 78, 0, 255, 0, 128, 128, 128, 192, 0
 CBC, ENVELOPE, 163, 160, 255, 192, 192, 192, 160, 192, 255
 CBC, SLU, 163, 255, 160, 255, 255, 255, 192, 72, 0
 PO, GU2 +X, 160, 255, 255, 0, 192, 192, 255, 128, 0
 ST, G1+G2 copertura A, 163, 255, 160, 255, 255, 255, 255, 255, 87
 PO, GU2 -X, 192, 0, 128, 78, 0, 255, 255, 87, 128
 PO, GU2 +Y, 146, 0, 255, 85, 192, 0, 255, 192, 160
 ST, G1+G2 copertura B, 148, 87, 255, 192, 128, 0, 255, 255, 255
 PO, GU2 -Y, 255, 192, 160, 0, 128, 128, 255, 0, 192
 ST, muro, 163, 255, 160, 255, 192, 160, 85, 0, 192
 ST, Q sottotetto, 255, 192, 87, 255, 87, 87, 192, 0, 192
 ST, sporto gronda, 0, 192, 128, 146, 0, 255, 148, 87, 255
 ST, Q neve, 128, 192, 0, 255, 192, 87, 192, 72, 0
 ST, SISMA X, 255, 255, 87, 192, 128, 0, 192, 192, 0
 ST, SISMA Y, 255, 87, 87, 163, 255, 160, 0, 128, 57
 ST, travi, 160, 255, 255, 85, 192, 0, 160, 192, 255

*EIGEN-CTRL    ; Eigenvalue Analysis Control
; TYPE, iFREQ, iITER, iDIM, TOL, bMINMAX, FRMIN, FRMAX, bSTRUM   ; TYPE=EIGEN
; TYPE, bINCNL, iGNUM                                            ; TYPE=RITZ(line 1)
;       KIND1, CASE1/GROUND1, iNOG1, ...                         ; TYPE=RITZ(from line
2)
   LANCZOS, 96, 20, 1, 1e-010, NO, 0, 0, NO

*DGN-MATL    ; Modify Steel(Concrete) Material
; iMAT, TYPE, MNAME, [DATA1]                                    ; STEEL
; iMAT, TYPE, MNAME, [DATA2], [R-DATA], FCI, bSERV, SHORT, LONG ; CONC
; iMAT, TYPE, MNAME, [DATA3], [DATA2], [R-DATA]                 ; SRC
; iMAT, TYPE, MNAME, [DATA5]                                    ; STEEL(None) & KSCE-A
SD05
; [DATA1] : 1, DB, CODE, NAME or 2, ELAST, POISN, FU, FY1, FY2, FY3, FY4
;           FY5, FY6, AFT, AFT2, AFT3, FY, AFV, AFV2, AFV3
; [DATA2] : 1, DB, CODE, NAME or 2, FC, CHK, LAMBDA
```

```
; [DATA3] : 1, DB, CODE, NAME or 2, ELAST, FU, FY1, FY2, FY3, FY4
;              FY5, FY6, AFT, AFT2, AFT3, FY, AFV, AFV2, AFV3
; [DATA4] : 1, DB, CODE, NAME or 2, FC
; [DATA5] : 3, ELAST, POISN, AL1, AL2, AL3, AL4, AL5, AL6, AL7, AL8, AL9, AL10
;              MIN1, MIN2, MIN3
; [R-DATA]: RBCODE, RBMAIN, RBSUB, FY(R), FYS
    6, CONC , C16/20            , 1, EN04(RC)    ,            ,C16/20        , NO, 1, ,
 , , 0, 0, 11200, NO, 0, 0,            ,            ,              , 0, NO, 1, , , , 0
, 0, 0
    8, STEEL, S275              , 1, EN05(S)     ,            ,S275          , 2, 0, ,
, , 0, 0,NO,0.0000e+000,     0,, 0, 0,0, 0, 0,0, 0, 0,0, 0, 0,0, 0, 0,0.0000e+000,
 0,, 0, 0,0, 0, 0,0, 0, 0,0, 0, 0,0, 0, 0,0.0000e+000,     0,, 0, 0,0, 0, 0,0, 0, 0,0,
 0, 0,0, 0, 0,

*ENDDATA
```

**PROJECT TITLE :**

| | Company | | Client | |
|---|---|---|---|---|
| MIDAS | Author | Nicola | File Name | US1A - scuola muscoline - PE - PO - 08.txt |

```
 ** midas Gen Pushover Curve Data **
_____________________________________________

[ Target Displacement ]
* Disp. Control Node : 195
* Direction : DX
* Load Pattern Type : Accerelation
* SLO- Demand, Capacity, Step, Remark : 0.004456, 0.003953, 55, N/A
* SLD- Demand, Capacity, Step, Remark : 0.004456, 0.005900, 55, OK
* SLV- Demand, Capacity, Step, Remark : 0.004456, -, 55, -
* SLC- Demand, Capacity, Step, Remark : 0.004456, -, 55, -
_____________________________________________

- Target Displacement of SLO
  m* = 325.014
  Gamma = 1
  Fy* = 894.971
  T* = 0.114489
  Se(T*) = 0.563901g
  det* = 0.00183597
  qu = 2.00811
  Tc = 0.44
  dt* = 0.00445649 (short period range)
  dt = 0.00445649

- Target Displacement of SLD
  m* = 325.014
  Gamma = 1
  Fy* = 894.971
  T* = 0.114489
  Se(T*) = 0.563901g
  det* = 0.00183597
  qu = 2.00811
  Tc = 0.44
  dt* = 0.00445649 (short period range)
  dt = 0.00445649

- Target Displacement of SLV
  m* = 325.014
  Gamma = 1
  Fy* = 894.971
  T* = 0.114489
  Se(T*) = 0.563901g
  det* = 0.00183597
  qu = 2.00811
  Tc = 0.44
  dt* = 0.00445649 (short period range)
  dt = 0.00445649

- Target Displacement of SLC
  m* = 325.014
  Gamma = 1
  Fy* = 894.971
  T* = 0.114489
  Se(T*) = 0.563901g
  det* = 0.00183597
  qu = 2.00811
  Tc = 0.44
  dt* = 0.00445649 (short period range)
  dt = 0.00445649
_____________________________________________

[ Spectral Displacement(Sd) vs. Spectral Acceleration(Sa) ]

Load Case :GU2 +X   Unit:  kN,m


 Node : 195   Direction : DX   Mode 4
```

**PROJECT TITLE :**

| | | | | |
|---|---|---|---|---|
| MIDAS | Company | | Client | |
| | Author | Nicola | File Name | US1A - scuola muscoline - PE - PO - 08.txt |

| Step<br>Status of Step | Spectral Displacement(Sd) | Spectral Acceleration(Sa) |
|---|---|---|
| 0 | 3.33333e-006 | 1.35614e-003 |
| 1 | 3.33333e-005 | 1.35614e-002 |
| 2 | 6.66667e-005 | 2.71228e-002 |
| 3 | 1.00000e-004 | 4.06842e-002 |
| 4 | 1.33333e-004 | 5.42457e-002 |
| 5 | 1.66667e-004 | 6.78071e-002 |
| 6 | 2.00000e-004 | 7.83421e-002 |
| 7 | 2.33333e-004 | 8.84728e-002 |
| 8 | 2.66667e-004 | 9.85786e-002 |
| 9 | 3.00000e-004 | 1.07452e-001 |
| 10 | 3.33333e-004 | 1.16325e-001 |
| 11 | 3.66667e-004 | 1.25198e-001 |
| 12 | 4.00000e-004 | 1.34071e-001 |
| 13 | 4.33333e-004 | 1.42945e-001 |
| 14 | 4.66667e-004 | 1.51673e-001 |
| 15 | 5.00000e-004 | 1.60161e-001 |
| 16 | 5.33333e-004 | 1.68134e-001 |
| 17 | 5.66667e-004 | 1.74936e-001 |
| 18 | 6.00000e-004 | 1.81737e-001 |
| 19 | 6.33333e-004 | 1.88413e-001 |
| 20 | 6.66667e-004 | 1.95013e-001 |
| 21 | 7.00000e-004 | 2.00146e-001 |
| 22 | 7.33333e-004 | 2.04407e-001 |
| 23 | 7.66667e-004 | 2.08668e-001 |
| 24 | 8.00000e-004 | 2.12922e-001 |
| 25 | 8.33333e-004 | 2.16456e-001 |
| 26 | 8.66667e-004 | 2.19989e-001 |
| 27 | 9.00000e-004 | 2.23385e-001 |
| 28 | 9.33333e-004 | 2.26399e-001 |
| 29 | 9.66667e-004 | 2.29413e-001 |
| 30 | 1.00000e-003 | 2.32347e-001 |
| 31 | 1.03333e-003 | 2.35080e-001 |

| | | | |
|---|---|---|---|
| 32 | 1.06667e-003 | 2.37736e-001 | |
| 33 | 1.10000e-003 | 2.39613e-001 | |
| 34 | 1.13333e-003 | 2.40860e-001 | |
| 35 | 1.16667e-003 | 2.42107e-001 | |
| 36 | 1.20000e-003 | 2.43347e-001 | |
| 37 | 1.23333e-003 | 2.44524e-001 | |
| 38 | 1.26667e-003 | 2.45702e-001 | |
| 39 | 1.30000e-003 | 2.46880e-001 | |
| 40 | 1.33333e-003 | 2.48058e-001 | |
| 41 | 1.36667e-003 | 2.49235e-001 | |
| 42 | 1.40000e-003 | 2.50413e-001 | |
| 43 | 1.43333e-003 | 2.51591e-001 | |
| 44 | 1.46667e-003 | 2.52769e-001 | |
| 45 | 1.50000e-003 | 2.53946e-001 | |
| 46 | 1.53333e-003 | 2.55124e-001 | |
| 47 | 1.56667e-003 | 2.56106e-001 | |
| 48 | 1.60000e-003 | 2.56955e-001 | |
| 49 | 1.63333e-003 | 2.57804e-001 | |
| 50 | 1.66667e-003 | 2.58653e-001 | |
| 51 | 1.70000e-003 | 2.59502e-001 | |
| 52 | 1.73333e-003 | 2.60309e-001 | |
| 53 | 1.76667e-003 | 2.61096e-001 | |
| 54 | 1.80000e-003 | 2.61882e-001 | |
| 55 | 1.83333e-003 | 2.62669e-001 | SLO(Dem.)SLD(Dem.)SLV(Dem.)SLC(Dem.) |
| 56 | 1.86667e-003 | 2.63455e-001 | |
| 57 | 1.90000e-003 | 2.64242e-001 | |
| 58 | 1.93333e-003 | 2.65028e-001 | |
| 59 | 1.96667e-003 | 2.65815e-001 | |
| 60 | 2.00000e-003 | 2.66601e-001 | |
| 61 | 2.03333e-003 | 2.67388e-001 | |
| 62 | 2.06667e-003 | 2.68174e-001 | |
| 63 | 2.10000e-003 | 2.68859e-001 | |
| 64 | 2.13333e-003 | 2.69478e-001 | |
| 65 | 2.16667e-003 | 2.70097e-001 | |
| 66 | 2.20000e-003 | 2.70638e-001 | |

**PROJECT TITLE :**

| | | | | |
|---|---|---|---|---|
| MIDAS | Company | | Client | |
| | Author | Nicola | File Name | US1A - scuola muscoline - PE - PO - 08.txt |

| | | |
|---|---|---|
| 67 | 2.23333e-003 | 2.71159e-001 |
| 68 | 2.26667e-003 | 2.71645e-001 |
| 69 | 2.30000e-003 | 2.72125e-001 |
| 70 | 2.33333e-003 | 2.72606e-001 |
| 71 | 2.36667e-003 | 2.73086e-001 |
| 72 | 2.40000e-003 | 2.73567e-001 |
| 73 | 2.43333e-003 | 2.74047e-001 |
| 74 | 2.46667e-003 | 2.74528e-001 |
| 75 | 2.50000e-003 | 2.75008e-001 |
| 76 | 2.53333e-003 | 2.75489e-001 |
| 77 | 2.56667e-003 | 2.75915e-001 |
| 78 | 2.60000e-003 | 2.76243e-001 |
| 79 | 2.63333e-003 | 2.76571e-001 |
| 80 | 2.66667e-003 | 2.76898e-001 |
| 81 | 2.70000e-003 | 2.77226e-001 |
| 82 | 2.73333e-003 | 2.77553e-001 |
| 83 | 2.76667e-003 | 2.77881e-001 |
| 84 | 2.80000e-003 | 2.78208e-001 |
| 85 | 2.83333e-003 | 2.78536e-001 |
| 86 | 2.86667e-003 | 2.78863e-001 |
| 87 | 2.90000e-003 | 2.79190e-001 |
| 88 | 2.93333e-003 | 2.79518e-001 |
| 89 | 2.96667e-003 | 2.79845e-001 |
| 90 | 3.00000e-003 | 2.80173e-001 |
| 91 | 3.03333e-003 | 2.80500e-001 |
| 92 | 3.06667e-003 | 2.80817e-001 |
| 93 | 3.10000e-003 | 2.81132e-001 |
| 94 | 3.13333e-003 | 2.81447e-001 |
| 95 | 3.16667e-003 | 2.81762e-001 |
| 96 | 3.20000e-003 | 2.82047e-001 |
| 97 | 3.23333e-003 | 2.82303e-001 |
| 98 | 3.26667e-003 | 2.82547e-001 |
| 99 | 3.30000e-003 | 2.82771e-001 |
| 100 | 3.33333e-003 | 2.82994e-001 |

**PROJECT TITLE :**

| | | | | |
|---|---|---|---|---|
| MIDAS | Company | | Client | |
| | Author | Nicola | File Name | US1A - scuola muscoline - PE - PO - 08.txt |

| | | |
|---|---|---|
| 101 | 3.36667e-003 | 2.83217e-001 |
| 102 | 3.40000e-003 | 2.83438e-001 |
| 103 | 3.43333e-003 | 2.83654e-001 |
| 104 | 3.46667e-003 | 2.83870e-001 |
| 105 | 3.50000e-003 | 2.84086e-001 |
| 106 | 3.53333e-003 | 2.84302e-001 |
| 107 | 3.56667e-003 | 2.84518e-001 |
| 108 | 3.60000e-003 | 2.84734e-001 |
| 109 | 3.63333e-003 | 2.84950e-001 |
| 110 | 3.66667e-003 | 2.85166e-001 |
| 111 | 3.70000e-003 | 2.85382e-001 |
| 112 | 3.73333e-003 | 2.85598e-001 |
| 113 | 3.76667e-003 | 2.85813e-001 |
| 114 | 3.80000e-003 | 2.86029e-001 |
| 115 | 3.83333e-003 | 2.86245e-001 |
| 116 | 3.86667e-003 | 2.86461e-001 |
| 117 | 3.90000e-003 | 2.86677e-001 |
| 118 | 3.93333e-003 | 2.86893e-001 |
| 119 | 3.96667e-003 | 2.87109e-001 |
| 120 | 4.00000e-003 | 2.87325e-001 |
| 121 | 4.03333e-003 | 2.87541e-001 |
| 122 | 4.06667e-003 | 2.87757e-001 |
| 123 | 4.10000e-003 | 2.87973e-001 |
| 124 | 4.13333e-003 | 2.88189e-001 |
| 125 | 4.16667e-003 | 2.88405e-001 |
| 126 | 4.20000e-003 | 2.88621e-001 |
| 127 | 4.23333e-003 | 2.88805e-001 |
| 128 | 4.26667e-003 | 2.88951e-001 |
| 129 | 4.30000e-003 | 2.89097e-001 |
| 130 | 4.33333e-003 | 2.89242e-001 |
| 131 | 4.36667e-003 | 2.89388e-001 |
| 132 | 4.40000e-003 | 2.89534e-001 |
| 133 | 4.43333e-003 | 2.89680e-001 |
| 134 | 4.46667e-003 | 2.89826e-001 |
| 135 | 4.50000e-003 | 2.89971e-001 |

| | | |
|---|---|---|
| 136 | 4.53333e-003 | 2.90117e-001 |
| 137 | 4.56667e-003 | 2.90263e-001 |
| 138 | 4.60000e-003 | 2.90409e-001 |
| 139 | 4.63333e-003 | 2.90555e-001 |
| 140 | 4.66667e-003 | 2.90700e-001 |
| 141 | 4.70000e-003 | 2.90846e-001 |
| 142 | 4.73333e-003 | 2.90992e-001 |
| 143 | 4.76667e-003 | 2.91138e-001 |
| 144 | 4.80000e-003 | 2.91283e-001 |
| 145 | 4.83333e-003 | 2.91429e-001 |
| 146 | 4.86667e-003 | 2.91563e-001 |
| 147 | 4.90000e-003 | 2.91688e-001 |
| 148 | 4.93333e-003 | 2.91813e-001 |
| 149 | 4.96667e-003 | 2.91938e-001 |
| 150 | 5.00000e-003 | 2.92055e-001 |
| 151 | 5.03333e-003 | 2.92165e-001 |
| 152 | 5.06667e-003 | 2.92275e-001 |
| 153 | 5.10000e-003 | 2.92385e-001 |
| 154 | 5.13333e-003 | 2.92495e-001 |
| 155 | 5.16667e-003 | 2.92605e-001 |
| 156 | 5.20000e-003 | 2.92715e-001 |
| 157 | 5.23333e-003 | 2.92824e-001 |
| 158 | 5.26667e-003 | 2.92934e-001 |
| 159 | 5.30000e-003 | 2.93035e-001 |
| 160 | 5.33333e-003 | 2.93131e-001 |
| 161 | 5.36667e-003 | 2.93225e-001 |
| 162 | 5.40000e-003 | 2.93314e-001 |
| 163 | 5.43333e-003 | 2.93404e-001 |
| 164 | 5.46667e-003 | 2.93493e-001 |
| 165 | 5.50000e-003 | 2.93579e-001 |
| 166 | 5.53333e-003 | 2.93658e-001 |
| 167 | 5.56667e-003 | 2.93737e-001 |
| 168 | 5.60000e-003 | 2.93817e-001 |
| 169 | 5.63333e-003 | 2.93896e-001 |

| | | |
|---|---|---|
| 170 | 5.66667e-003 | 2.93975e-001 |
| 171 | 5.70000e-003 | 2.94049e-001 |
| 172 | 5.73333e-003 | 2.94123e-001 |
| 173 | 5.76667e-003 | 2.94198e-001 |
| 174 | 5.80000e-003 | 2.94272e-001 |
| 175 | 5.83333e-003 | 2.94346e-001 |
| 176 | 5.86667e-003 | 2.94420e-001 |
| 177 | 5.90000e-003 | 2.94494e-001 |
| SLD(Cap.) | | |
| 178 | 5.93333e-003 | 2.91300e-001 |
| 179 | 5.96667e-003 | 2.91378e-001 |
| 180 | 6.00000e-003 | 2.91456e-001 |
| 181 | 6.03333e-003 | 2.91534e-001 |
| 182 | 6.06667e-003 | 2.91612e-001 |
| 183 | 6.10000e-003 | 2.91690e-001 |
| 184 | 6.13333e-003 | 2.91769e-001 |
| 185 | 6.16667e-003 | 2.91847e-001 |
| 186 | 6.20000e-003 | 2.91925e-001 |
| 187 | 6.23333e-003 | 2.92003e-001 |
| 188 | 6.26667e-003 | 2.92074e-001 |
| 189 | 6.30000e-003 | 2.92145e-001 |
| 190 | 6.33333e-003 | 2.92216e-001 |
| 191 | 6.36667e-003 | 2.92288e-001 |
| 192 | 6.40000e-003 | 2.92359e-001 |
| 193 | 6.43333e-003 | 2.92430e-001 |
| 194 | 6.46667e-003 | 2.92501e-001 |
| 195 | 6.50000e-003 | 2.92572e-001 |
| 196 | 6.53333e-003 | 2.92643e-001 |
| 197 | 6.56667e-003 | 2.89469e-001 |
| 198 | 6.60000e-003 | 2.86300e-001 |
| 199 | 6.63333e-003 | 2.86371e-001 |
| 200 | 6.66667e-003 | 2.86443e-001 |
| 201 | 6.70000e-003 | 2.86514e-001 |
| 202 | 6.73333e-003 | 2.86579e-001 |
| 203 | 6.76667e-003 | 2.86643e-001 |
| 204 | 6.80000e-003 | 2.86708e-001 |

**PROJECT TITLE :**

| | Company | | Client | |
|---|---|---|---|---|
| MIDAS | Author | Nicola | File Name | US1A - scuola muscoline - PE - PO - 08.txt |

| | | |
|---|---|---|
| 205 | 6.83333e-003 | 2.86772e-001 |
| 206 | 6.86667e-003 | 2.86836e-001 |
| 207 | 6.90000e-003 | 2.86893e-001 |
| 208 | 6.93333e-003 | 2.86948e-001 |
| 209 | 6.96667e-003 | 2.87004e-001 |
| 210 | 7.00000e-003 | 2.87060e-001 |
| 211 | 7.03333e-003 | 2.87116e-001 |
| 212 | 7.06667e-003 | 2.87159e-001 |
| 213 | 7.10000e-003 | 2.87195e-001 |
| 214 | 7.13333e-003 | 2.87231e-001 |
| 215 | 7.16667e-003 | 2.87267e-001 |
| 216 | 7.20000e-003 | 2.87299e-001 |
| 217 | 7.23333e-003 | 2.87328e-001 |
| 218 | 7.26667e-003 | 2.87353e-001 |
| 219 | 7.30000e-003 | 2.87378e-001 |
| 220 | 7.33333e-003 | 2.87402e-001 |
| 221 | 7.36667e-003 | 2.87427e-001 |
| 222 | 7.40000e-003 | 2.87451e-001 |
| 223 | 7.43333e-003 | 2.87476e-001 |
| 224 | 7.46667e-003 | 2.87500e-001 |
| 225 | 7.50000e-003 | 2.87525e-001 |
| 226 | 7.53333e-003 | 2.87549e-001 |
| 227 | 7.56667e-003 | 2.87574e-001 |
| 228 | 7.60000e-003 | 2.87598e-001 |
| 229 | 7.63333e-003 | 2.87623e-001 |
| 230 | 7.66667e-003 | 2.87647e-001 |
| 231 | 7.70000e-003 | 2.87671e-001 |
| 232 | 7.73333e-003 | 2.87696e-001 |
| 233 | 7.76667e-003 | 2.87720e-001 |
| 234 | 7.80000e-003 | 2.87744e-001 |
| 235 | 7.83333e-003 | 2.87765e-001 |
| 236 | 7.86667e-003 | 2.87786e-001 |
| 237 | 7.90000e-003 | 2.87807e-001 |
| 238 | 7.93333e-003 | 2.87828e-001 |

**PROJECT TITLE :**

| | Company | | Client | |
|---|---|---|---|---|
| MIDAS | Author | Nicola | File Name | US1A - scuola muscoline - PE - PO - 08.txt |

| | | |
|---|---|---|
| 239 | 7.96667e-003 | 2.87849e-001 |
| 240 | 8.00000e-003 | 2.87870e-001 |
| 241 | 8.03333e-003 | 2.87892e-001 |
| 242 | 8.06667e-003 | 2.87913e-001 |
| 243 | 8.10000e-003 | 2.87934e-001 |
| 244 | 8.13333e-003 | 2.87955e-001 |
| 245 | 8.16667e-003 | 1.67826e-001 |
| 246 | 8.20000e-003 | 1.36198e-002 |
| 247 | 8.23333e-003 | 1.60086e-002 |
| 248 | 8.26667e-003 | 8.31606e-003 |
| 249 | 8.30000e-003 | 5.55793e-003 |
| 250 | 8.33333e-003 | 5.17400e-003 |
| 251 | 8.36667e-003 | 5.07265e-003 |
| 252 | 8.40000e-003 | 5.00427e-003 |
| 253 | 8.43333e-003 | 4.95759e-003 |
| 254 | 8.46667e-003 | 4.92492e-003 |
| 255 | 8.50000e-003 | 4.72639e-003 |
| 256 | 8.53333e-003 | 4.61070e-003 |
| 257 | 8.56667e-003 | 4.54843e-003 |
| 258 | 8.60000e-003 | 4.50143e-003 |
| 259 | 8.63333e-003 | 4.46262e-003 |
| 260 | 8.66667e-003 | 4.42986e-003 |
| 261 | 8.70000e-003 | 4.40163e-003 |
| 262 | 8.73333e-003 | 4.37685e-003 |
| 263 | 8.76667e-003 | 4.35471e-003 |
| 264 | 8.80000e-003 | 4.33466e-003 |
| 265 | 8.83333e-003 | 4.31627e-003 |
| 266 | 8.86667e-003 | 4.29923e-003 |
| 267 | 8.90000e-003 | 4.28331e-003 |
| 268 | 8.93333e-003 | 4.26835e-003 |
| 269 | 8.96667e-003 | 4.25421e-003 |
| 270 | 9.00000e-003 | 4.24079e-003 |
| 271 | 9.03333e-003 | 4.22801e-003 |
| 272 | 9.06667e-003 | 4.21581e-003 |
| 273 | 9.10000e-003 | 4.20414e-003 |

| | | |
|---|---|---|
| 274 | 9.13333e-003 | 4.19294e-003 |
| 275 | 9.16667e-003 | 4.18219e-003 |
| 276 | 9.20000e-003 | 4.17184e-003 |
| 277 | 9.23333e-003 | 4.16188e-003 |
| 278 | 9.26667e-003 | 4.15227e-003 |
| 279 | 9.30000e-003 | 4.14300e-003 |
| 280 | 9.33333e-003 | 4.13403e-003 |
| 281 | 9.36667e-003 | 4.12536e-003 |
| 282 | 9.40000e-003 | 4.11697e-003 |
| 283 | 9.43333e-003 | 4.10883e-003 |
| 284 | 9.46667e-003 | 4.10093e-003 |
| 285 | 9.50000e-003 | 4.09326e-003 |
| 286 | 9.53333e-003 | 4.08581e-003 |
| 287 | 9.56667e-003 | 4.07856e-003 |
| 288 | 9.60000e-003 | 4.07150e-003 |
| 289 | 9.63333e-003 | 4.06462e-003 |
| 290 | 9.66667e-003 | 4.05791e-003 |
| 291 | 9.70000e-003 | 4.05136e-003 |
| 292 | 9.73333e-003 | 4.04496e-003 |
| 293 | 9.76667e-003 | 4.03870e-003 |
| 294 | 9.80000e-003 | 4.03258e-003 |
| 295 | 9.83333e-003 | 4.02658e-003 |
| 296 | 9.86667e-003 | 4.02100e-003 |
| 297 | 9.90000e-003 | 4.01509e-003 |
| 298 | 9.93333e-003 | 4.00946e-003 |
| 299 | 9.96667e-003 | 4.00392e-003 |
| 300 | 1.00000e-002 | 3.99848e-003 |
| Min : | 3.33333e-006 | 1.35614e-003 |
| Max : | 5.90000e-003 | 2.94494e-001 |

**PROJECT TITLE :**

| | | | | |
|---|---|---|---|---|
| MIDAS | Company | | Client | |
| | Author | Nicola | File Name | US1A - scuola muscoline - PE - PO - 08.txt |

```
 ** midas Gen Pushover Curve Data **
_____________________________________________

[ Target Displacement ]
* Disp. Control Node : 195
* Direction : DX
* Load Pattern Type : Accerelation
* SLO- Demand, Capacity, Step, Remark : 0.004746, 0.004422, 12, N/A
* SLD- Demand, Capacity, Step, Remark : 0.004746, 0.006600, 12, OK
* SLV- Demand, Capacity, Step, Remark : 0.004746, -, 12, -
* SLC- Demand, Capacity, Step, Remark : 0.004746, -, 12, -
_____________________________________________

- Target Displacement of SLO
  m* = 325.014
  Gamma = 1
  Fy* = 793.181
  T* = 0.114419
  Se(T*) = 0.563708g
  det* = 0.0018331
  qu = 2.26504
  Tc = 0.44
  dt* = 0.00474632 (short period range)
  dt = 0.00474632

- Target Displacement of SLD
  m* = 325.014
  Gamma = 1
  Fy* = 793.181
  T* = 0.114419
  Se(T*) = 0.563708g
  det* = 0.0018331
  qu = 2.26504
  Tc = 0.44
  dt* = 0.00474632 (short period range)
  dt = 0.00474632

- Target Displacement of SLV
  m* = 325.014
  Gamma = 1
  Fy* = 793.181
  T* = 0.114419
  Se(T*) = 0.563708g
  det* = 0.0018331
  qu = 2.26504
  Tc = 0.44
  dt* = 0.00474632 (short period range)
  dt = 0.00474632

- Target Displacement of SLC
  m* = 325.014
  Gamma = 1
  Fy* = 793.181
  T* = 0.114419
  Se(T*) = 0.563708g
  det* = 0.0018331
  qu = 2.26504
  Tc = 0.44
  dt* = 0.00474632 (short period range)
  dt = 0.00474632
_____________________________________________

[ Spectral Displacement(Sd) vs. Spectral Acceleration(Sa) ]

Load Case :GU2 -X   Unit:  kN,m


 Node : 195   Direction : DX   Mode 4
```

**PROJECT TITLE :**

| | | | | |
|---|---|---|---|---|
| MIDAS | Company | | Client | |
| | Author | Nicola | File Name | US1A - scuola muscoline - PE - PO - 08.txt |

| Step | Spectral Displacement(Sd) | Spectral Acceleration(Sa) | Status of Step |
|---|---|---|---|
| 0 | 1.50000e-005 | 5.93016e-003 | |
| 1 | 1.50000e-004 | 5.93016e-002 | |
| 2 | 3.00000e-004 | 1.04446e-001 | |
| 3 | 4.50000e-004 | 1.46421e-001 | |
| 4 | 6.00000e-004 | 1.72648e-001 | |
| 5 | 7.50000e-004 | 1.89238e-001 | |
| 6 | 9.00000e-004 | 2.02866e-001 | |
| 7 | 1.05000e-003 | 2.11080e-001 | |
| 8 | 1.20000e-003 | 2.18023e-001 | |
| 9 | 1.35000e-003 | 2.24810e-001 | |
| 10 | 1.50000e-003 | 2.30595e-001 | |
| 11 | 1.65000e-003 | 2.34378e-001 | |
| 12 | 1.80000e-003 | 2.37520e-001 | SLO(Dem.)SLD(Dem.)SLV(Dem.)SLC(Dem.) |
| 13 | 1.95000e-003 | 2.40661e-001 | |
| 14 | 2.10000e-003 | 2.43689e-001 | |
| 15 | 2.25000e-003 | 2.45544e-001 | |
| 16 | 2.40000e-003 | 2.46946e-001 | |
| 17 | 2.55000e-003 | 2.47980e-001 | |
| 18 | 2.70000e-003 | 2.48996e-001 | |
| 19 | 2.85000e-003 | 2.50012e-001 | |
| 20 | 3.00000e-003 | 2.50891e-001 | |
| 21 | 3.15000e-003 | 2.51692e-001 | |
| 22 | 3.30000e-003 | 2.52432e-001 | |
| 23 | 3.45000e-003 | 2.53074e-001 | |
| 24 | 3.60000e-003 | 2.53594e-001 | |
| 25 | 3.75000e-003 | 2.54115e-001 | |
| 26 | 3.90000e-003 | 2.54635e-001 | |
| 27 | 4.05000e-003 | 2.55138e-001 | |
| 28 | 4.20000e-003 | 2.55636e-001 | |
| 29 | 4.35000e-003 | 2.56135e-001 | |
| 30 | 4.50000e-003 | 2.56633e-001 | |
| 31 | 4.65000e-003 | 2.57131e-001 | |

| | | | |
|---|---|---|---|
| | 32 | 4.80000e-003 | 2.57630e-001 |
| | 33 | 4.95000e-003 | 2.58128e-001 |
| | 34 | 5.10000e-003 | 2.58622e-001 |
| | 35 | 5.25000e-003 | 2.59047e-001 |
| | 36 | 5.40000e-003 | 2.59437e-001 |
| | 37 | 5.55000e-003 | 2.59764e-001 |
| | 38 | 5.70000e-003 | 2.60089e-001 |
| | 39 | 5.85000e-003 | 2.60390e-001 |
| | 40 | 6.00000e-003 | 2.60680e-001 |
| | 41 | 6.15000e-003 | 2.60971e-001 |
| | 42 | 6.30000e-003 | 2.61260e-001 |
| | 43 | 6.45000e-003 | 2.61479e-001 |
| | 44 | 6.60000e-003 | 2.61692e-001 |
| SLD(Cap.) | 45 | 6.75000e-003 | 2.58570e-001 |
| | 46 | 6.90000e-003 | 2.58787e-001 |
| | 47 | 7.05000e-003 | 2.58967e-001 |
| | 48 | 7.20000e-003 | 2.59128e-001 |
| | 49 | 7.35000e-003 | 2.59290e-001 |
| | 50 | 7.50000e-003 | 2.59433e-001 |
| | 51 | 7.65000e-003 | 2.59536e-001 |
| | 52 | 7.80000e-003 | 2.59621e-001 |
| | 53 | 7.95000e-003 | 2.59697e-001 |
| | 54 | 8.10000e-003 | 2.56543e-001 |
| | 55 | 8.25000e-003 | 2.56619e-001 |
| | 56 | 8.40000e-003 | 2.53462e-001 |
| | 57 | 8.55000e-003 | 2.53538e-001 |
| | 58 | 8.70000e-003 | 2.53614e-001 |
| | 59 | 8.85000e-003 | 2.53690e-001 |
| | 60 | 9.00000e-003 | 2.53765e-001 |
| | 61 | 9.15000e-003 | 2.53834e-001 |
| | 62 | 9.30000e-003 | 2.53900e-001 |
| | 63 | 9.45000e-003 | 2.53965e-001 |
| | 64 | 9.60000e-003 | 2.54029e-001 |
| | 65 | 9.75000e-003 | 2.54093e-001 |
| | 66 | 9.90000e-003 | 2.54158e-001 |

**PROJECT TITLE :**

| | Company | | Client | |
|---|---|---|---|---|
| MIDAS | Author | Nicola | File Name | US1A - scuola muscoline - PE - PO - 08.txt |

| | | |
|---|---|---|
| 67 | 1.00500e-002 | 2.54222e-001 |
| 68 | 1.02000e-002 | 2.54286e-001 |
| 69 | 1.03500e-002 | 2.54349e-001 |
| 70 | 1.05000e-002 | 2.51396e-001 |
| 71 | 1.06500e-002 | 2.51536e-001 |
| 72 | 1.08000e-002 | 2.51677e-001 |
| 73 | 1.09500e-002 | 2.51772e-001 |
| 74 | 1.11000e-002 | 2.51827e-001 |
| 75 | 1.12500e-002 | 2.51873e-001 |
| 76 | 1.14000e-002 | 2.51920e-001 |
| 77 | 1.15500e-002 | 2.51966e-001 |
| 78 | 1.17000e-002 | 2.52013e-001 |
| 79 | 1.18500e-002 | 2.52060e-001 |
| 80 | 1.20000e-002 | 2.52106e-001 |
| 81 | 1.21500e-002 | 2.52153e-001 |
| 82 | 1.23000e-002 | 2.52199e-001 |
| 83 | 1.24500e-002 | 2.52246e-001 |
| 84 | 1.26000e-002 | 2.52291e-001 |
| 85 | 1.27500e-002 | 2.52328e-001 |
| 86 | 1.29000e-002 | 2.52365e-001 |
| 87 | 1.30500e-002 | 2.52401e-001 |
| 88 | 1.32000e-002 | 2.52438e-001 |
| 89 | 1.33500e-002 | 2.52474e-001 |
| 90 | 1.35000e-002 | 2.49838e-001 |
| 91 | 1.36500e-002 | 2.49926e-001 |
| 92 | 1.38000e-002 | 2.49963e-001 |
| 93 | 1.39500e-002 | 2.50000e-001 |
| 94 | 1.41000e-002 | 2.50036e-001 |
| 95 | 1.42500e-002 | 2.50073e-001 |
| 96 | 1.44000e-002 | 2.50109e-001 |
| 97 | 1.45500e-002 | 2.50146e-001 |
| 98 | 1.47000e-002 | 2.40132e-001 |
| 99 | 1.48500e-002 | 2.39847e-001 |
| 100 | 1.50000e-002 | 2.23239e-001 |

**PROJECT TITLE :**

| | Company | | Client | |
|---|---|---|---|---|
| MIDAS | Author | Nicola | File Name | US1A - scuola muscoline - PE - PO - 08.txt |

| | | |
|---|---|---|
| 101 | 1.51500e-002 | 2.23357e-001 |
| 102 | 1.53000e-002 | 2.23475e-001 |
| 103 | 1.54500e-002 | 2.23593e-001 |
| 104 | 1.56000e-002 | 2.23652e-001 |
| 105 | 1.57500e-002 | 2.23680e-001 |
| 106 | 1.59000e-002 | 2.23707e-001 |
| 107 | 1.60500e-002 | 2.23734e-001 |
| 108 | 1.62000e-002 | 2.23427e-001 |
| 109 | 1.63500e-002 | 1.94969e-001 |
| 110 | 1.65000e-002 | 1.95051e-001 |
| 111 | 1.66500e-002 | 1.95134e-001 |
| 112 | 1.68000e-002 | 1.95217e-001 |
| 113 | 1.69500e-002 | 1.95300e-001 |
| 114 | 1.71000e-002 | 1.95383e-001 |
| 115 | 1.72500e-002 | 1.95466e-001 |
| 116 | 1.74000e-002 | 1.95549e-001 |
| 117 | 1.75500e-002 | 1.95619e-001 |
| 118 | 1.77000e-002 | 1.72000e-001 |
| 119 | 1.78500e-002 | 1.72951e-001 |
| 120 | 1.80000e-002 | 1.73005e-001 |
| 121 | 1.81500e-002 | 1.73058e-001 |
| 122 | 1.83000e-002 | 1.73112e-001 |
| 123 | 1.84500e-002 | 1.73165e-001 |
| 124 | 1.86000e-002 | 1.73219e-001 |
| 125 | 1.87500e-002 | 1.73273e-001 |
| 126 | 1.89000e-002 | 1.73326e-001 |
| 127 | 1.90500e-002 | 1.73380e-001 |
| 128 | 1.92000e-002 | 1.73434e-001 |
| 129 | 1.93500e-002 | 1.73487e-001 |
| 130 | 1.95000e-002 | 1.73541e-001 |
| 131 | 1.96500e-002 | 1.73594e-001 |
| 132 | 1.98000e-002 | 1.73615e-001 |
| 133 | 1.99500e-002 | 1.73619e-001 |
| 134 | 2.01000e-002 | 1.73622e-001 |
| 135 | 2.02500e-002 | 1.73626e-001 |

**PROJECT TITLE :**

| | | | | |
|---|---|---|---|---|
| MIDAS | Company | | Client | |
| | Author | Nicola | File Name | US1A - scuola muscoline - PE - PO - 08.txt |

| | | |
|---|---|---|
| 136 | 2.04000e-002 | 1.73630e-001 |
| 137 | 2.05500e-002 | 1.72194e-001 |
| 138 | 2.07000e-002 | 1.72208e-001 |
| 139 | 2.08500e-002 | 1.72222e-001 |
| 140 | 2.10000e-002 | 1.72236e-001 |
| 141 | 2.11500e-002 | 1.72251e-001 |
| 142 | 2.13000e-002 | 1.72265e-001 |
| 143 | 2.14500e-002 | 1.72279e-001 |
| 144 | 2.16000e-002 | 1.72293e-001 |
| 145 | 2.17500e-002 | 1.72308e-001 |
| 146 | 2.19000e-002 | 1.72322e-001 |
| 147 | 2.20500e-002 | 1.72336e-001 |
| 148 | 2.22000e-002 | 1.72350e-001 |
| 149 | 2.23500e-002 | 1.72365e-001 |
| 150 | 2.25000e-002 | 1.72379e-001 |
| 151 | 2.26500e-002 | 1.72393e-001 |
| 152 | 2.28000e-002 | 1.71075e-001 |
| 153 | 2.29500e-002 | 1.71112e-001 |
| 154 | 2.31000e-002 | 1.71141e-001 |
| 155 | 2.32500e-002 | 1.71164e-001 |
| 156 | 2.34000e-002 | 1.69899e-001 |
| 157 | 2.35500e-002 | 1.69914e-001 |
| 158 | 2.37000e-002 | 1.68905e-001 |
| 159 | 2.38500e-002 | 1.68926e-001 |
| 160 | 2.40000e-002 | 1.68946e-001 |
| 161 | 2.41500e-002 | 1.68967e-001 |
| 162 | 2.43000e-002 | 1.67359e-001 |
| 163 | 2.44500e-002 | 1.67380e-001 |
| 164 | 2.46000e-002 | 1.67401e-001 |
| 165 | 2.47500e-002 | 1.67421e-001 |
| 166 | 2.49000e-002 | 1.67442e-001 |
| 167 | 2.50500e-002 | 1.67462e-001 |
| 168 | 2.52000e-002 | 1.67483e-001 |
| 169 | 2.53500e-002 | 1.67504e-001 |

| | | |
|---|---|---|
| 170 | 2.55000e-002 | 1.67524e-001 |
| 171 | 2.56500e-002 | 1.67545e-001 |
| 172 | 2.58000e-002 | 1.65110e-001 |
| 173 | 2.59500e-002 | 1.65167e-001 |
| 174 | 2.61000e-002 | 8.60050e-002 |
| 175 | 2.62500e-002 | 6.76377e-002 |
| 176 | 2.64000e-002 | 6.76745e-002 |
| 177 | 2.65500e-002 | 6.65944e-002 |
| 178 | 2.67000e-002 | 6.19852e-002 |
| 179 | 2.68500e-002 | 6.20197e-002 |
| 180 | 2.70000e-002 | 6.20501e-002 |
| 181 | 2.71500e-002 | 6.20801e-002 |
| 182 | 2.73000e-002 | 6.06569e-002 |
| 183 | 2.74500e-002 | 6.06767e-002 |
| 184 | 2.76000e-002 | 6.06965e-002 |
| 185 | 2.77500e-002 | 6.07163e-002 |
| 186 | 2.79000e-002 | 6.07360e-002 |
| 187 | 2.80500e-002 | 6.07558e-002 |
| 188 | 2.82000e-002 | 6.07756e-002 |
| 189 | 2.83500e-002 | 6.07954e-002 |
| 190 | 2.85000e-002 | 6.08152e-002 |
| 191 | 2.86500e-002 | 6.08350e-002 |
| 192 | 2.88000e-002 | 6.08548e-002 |
| 193 | 2.89500e-002 | 6.08739e-002 |
| 194 | 2.91000e-002 | 6.08887e-002 |
| 195 | 2.92500e-002 | 6.09033e-002 |
| 196 | 2.94000e-002 | 6.09180e-002 |
| 197 | 2.95500e-002 | 6.09326e-002 |
| 198 | 2.97000e-002 | 6.09473e-002 |
| 199 | 2.98500e-002 | 6.09620e-002 |
| 200 | 3.00000e-002 | 6.09766e-002 |

| | | |
|---|---|---|
| Min : | 1.50000e-005 | 5.93016e-003 |
| Max : | 6.60000e-003 | 2.61692e-001 |

**PROJECT TITLE :**

| | Company | | Client | |
|---|---|---|---|---|
| MIDAS | Author | Nicola | File Name | US1A - scuola muscoline - PE - PO - 08.txt |

```
 ** midas Gen Pushover Curve Data **
_____________________________________________

[ Target Displacement ]
* Disp. Control Node : 195
* Direction : DY
* Load Pattern Type : Accerelation
* SLO- Demand, Capacity, Step, Remark : 0.005622, 0.015678, 12, OK
* SLD- Demand, Capacity, Step, Remark : 0.005622, 0.023400, 12, OK
* SLV- Demand, Capacity, Step, Remark : 0.005622, -, 12, -
* SLC- Demand, Capacity, Step, Remark : 0.005622, -, 12, -
_____________________________________________

- Target Displacement of SLO
  m* = 325.014
  Gamma = 1
  Fy* = 485.643
  T* = 0.114228
  Se(T*) = 0.563181g
  det* = 0.00182526
  qu = 3.69594
  Tc = 0.44
  dt* = 0.00562236 (short period range)
  dt = 0.00562236

- Target Displacement of SLD
  m* = 325.014
  Gamma = 1
  Fy* = 485.643
  T* = 0.114228
  Se(T*) = 0.563181g
  det* = 0.00182526
  qu = 3.69594
  Tc = 0.44
  dt* = 0.00562236 (short period range)
  dt = 0.00562236

- Target Displacement of SLV
  m* = 325.014
  Gamma = 1
  Fy* = 485.643
  T* = 0.114228
  Se(T*) = 0.563181g
  det* = 0.00182526
  qu = 3.69594
  Tc = 0.44
  dt* = 0.00562236 (short period range)
  dt = 0.00562236

- Target Displacement of SLC
  m* = 325.014
  Gamma = 1
  Fy* = 485.643
  T* = 0.114228
  Se(T*) = 0.563181g
  det* = 0.00182526
  qu = 3.69594
  Tc = 0.44
  dt* = 0.00562236 (short period range)
  dt = 0.00562236
_____________________________________________

[ Spectral Displacement(Sd) vs. Spectral Acceleration(Sa) ]

Load Case :GU2 +Y   Unit:  kN,m


 Node : 195   Direction : DY   Mode 2
```

**PROJECT TITLE :**

| | | | | |
|---|---|---|---|---|
| MIDAS | Company | | Client | |
| | Author | Nicola | File Name | US1A - scuola muscoline - PE - PO - 08.txt |

| Step | Spectral Displacement(Sd) | Spectral Acceleration(Sa) | Status of Step |
|---|---|---|---|
| 0 | 1.50000e-005 | 5.35012e-003 | |
| 1 | 1.50000e-004 | 5.35012e-002 | |
| 2 | 3.00000e-004 | 9.24859e-002 | |
| 3 | 4.50000e-004 | 1.25225e-001 | |
| 4 | 6.00000e-004 | 1.36418e-001 | |
| 5 | 7.50000e-004 | 1.40289e-001 | |
| 6 | 9.00000e-004 | 1.42399e-001 | |
| 7 | 1.05000e-003 | 1.44141e-001 | |
| 8 | 1.20000e-003 | 1.45168e-001 | |
| 9 | 1.35000e-003 | 1.46196e-001 | |
| 10 | 1.50000e-003 | 1.47223e-001 | |
| 11 | 1.65000e-003 | 1.48147e-001 | |
| 12 | 1.80000e-003 | 1.48859e-001 | SLO(Dem.)SLD(Dem.)SLV(Dem.)SLC(Dem.) |
| 13 | 1.95000e-003 | 1.49571e-001 | |
| 14 | 2.10000e-003 | 1.50110e-001 | |
| 15 | 2.25000e-003 | 1.50424e-001 | |
| 16 | 2.40000e-003 | 1.50738e-001 | |
| 17 | 2.55000e-003 | 1.51052e-001 | |
| 18 | 2.70000e-003 | 1.51366e-001 | |
| 19 | 2.85000e-003 | 1.51467e-001 | |
| 20 | 3.00000e-003 | 1.51568e-001 | |
| 21 | 3.15000e-003 | 1.51670e-001 | |
| 22 | 3.30000e-003 | 1.51771e-001 | |
| 23 | 3.45000e-003 | 1.51872e-001 | |
| 24 | 3.60000e-003 | 1.51973e-001 | |
| 25 | 3.75000e-003 | 1.52074e-001 | |
| 26 | 3.90000e-003 | 1.52175e-001 | |
| 27 | 4.05000e-003 | 1.52276e-001 | |
| 28 | 4.20000e-003 | 1.52377e-001 | |
| 29 | 4.35000e-003 | 1.52478e-001 | |
| 30 | 4.50000e-003 | 1.52579e-001 | |
| 31 | 4.65000e-003 | 1.52681e-001 | |

**PROJECT TITLE :**

| | | | | |
|---|---|---|---|---|
| MIDAS | Company | | Client | |
| | Author | Nicola | File Name | US1A - scuola muscoline - PE - PO - 08.txt |

| | | |
|---|---|---|
| 32 | 4.80000e-003 | 1.52770e-001 |
| 33 | 4.95000e-003 | 1.52840e-001 |
| 34 | 5.10000e-003 | 1.52911e-001 |
| 35 | 5.25000e-003 | 1.52981e-001 |
| 36 | 5.40000e-003 | 1.53051e-001 |
| 37 | 5.55000e-003 | 1.53122e-001 |
| 38 | 5.70000e-003 | 1.53192e-001 |
| 39 | 5.85000e-003 | 1.53262e-001 |
| 40 | 6.00000e-003 | 1.53317e-001 |
| 41 | 6.15000e-003 | 1.53338e-001 |
| 42 | 6.30000e-003 | 1.53343e-001 |
| 43 | 6.45000e-003 | 1.53343e-001 |
| 44 | 6.60000e-003 | 1.53344e-001 |
| 45 | 6.75000e-003 | 1.53345e-001 |
| 46 | 6.90000e-003 | 1.53346e-001 |
| 47 | 7.05000e-003 | 1.53347e-001 |
| 48 | 7.20000e-003 | 1.53348e-001 |
| 49 | 7.35000e-003 | 1.53349e-001 |
| 50 | 7.50000e-003 | 1.53350e-001 |
| 51 | 7.65000e-003 | 1.53351e-001 |
| 52 | 7.80000e-003 | 1.53352e-001 |
| 53 | 7.95000e-003 | 1.53352e-001 |
| 54 | 8.10000e-003 | 1.53353e-001 |
| 55 | 8.25000e-003 | 1.53354e-001 |
| 56 | 8.40000e-003 | 1.53355e-001 |
| 57 | 8.55000e-003 | 1.53356e-001 |
| 58 | 8.70000e-003 | 1.53357e-001 |
| 59 | 8.85000e-003 | 1.53358e-001 |
| 60 | 9.00000e-003 | 1.53359e-001 |
| 61 | 9.15000e-003 | 1.53360e-001 |
| 62 | 9.30000e-003 | 1.53361e-001 |
| 63 | 9.45000e-003 | 1.53361e-001 |
| 64 | 9.60000e-003 | 1.53362e-001 |
| 65 | 9.75000e-003 | 1.53363e-001 |
| 66 | 9.90000e-003 | 1.53364e-001 |

| | | |
|---|---|---|
| 67 | 1.00500e-002 | 1.53365e-001 |
| 68 | 1.02000e-002 | 1.53366e-001 |
| 69 | 1.03500e-002 | 1.53367e-001 |
| 70 | 1.05000e-002 | 1.53368e-001 |
| 71 | 1.06500e-002 | 1.53369e-001 |
| 72 | 1.08000e-002 | 1.53370e-001 |
| 73 | 1.09500e-002 | 1.53370e-001 |
| 74 | 1.11000e-002 | 1.53371e-001 |
| 75 | 1.12500e-002 | 1.53372e-001 |
| 76 | 1.14000e-002 | 1.53373e-001 |
| 77 | 1.15500e-002 | 1.53374e-001 |
| 78 | 1.17000e-002 | 1.53375e-001 |
| 79 | 1.18500e-002 | 1.53376e-001 |
| 80 | 1.20000e-002 | 1.53377e-001 |
| 81 | 1.21500e-002 | 1.53378e-001 |
| 82 | 1.23000e-002 | 1.53378e-001 |
| 83 | 1.24500e-002 | 1.53379e-001 |
| 84 | 1.26000e-002 | 1.53380e-001 |
| 85 | 1.27500e-002 | 1.53381e-001 |
| 86 | 1.29000e-002 | 1.53382e-001 |
| 87 | 1.30500e-002 | 1.53383e-001 |
| 88 | 1.32000e-002 | 1.53384e-001 |
| 89 | 1.33500e-002 | 1.53385e-001 |
| 90 | 1.35000e-002 | 1.53386e-001 |
| 91 | 1.36500e-002 | 1.53387e-001 |
| 92 | 1.38000e-002 | 1.53387e-001 |
| 93 | 1.39500e-002 | 1.53388e-001 |
| 94 | 1.41000e-002 | 1.53389e-001 |
| 95 | 1.42500e-002 | 1.53390e-001 |
| 96 | 1.44000e-002 | 1.53391e-001 |
| 97 | 1.45500e-002 | 1.53392e-001 |
| 98 | 1.47000e-002 | 1.53393e-001 |
| 99 | 1.48500e-002 | 1.53394e-001 |
| 100 | 1.50000e-002 | 1.53395e-001 |

**PROJECT TITLE :**

| | | | | |
|---|---|---|---|---|
| MIDAS | Company | | Client | |
| | Author | Nicola | File Name | US1A - scuola muscoline - PE - PO - 08.txt |

| | | |
|---|---|---|
| 101 | 1.51500e-002 | 1.53396e-001 |
| 102 | 1.53000e-002 | 1.53396e-001 |
| 103 | 1.54500e-002 | 1.53397e-001 |
| 104 | 1.56000e-002 | 1.53398e-001 |
| 105 | 1.57500e-002 | 1.53399e-001 |
| 106 | 1.59000e-002 | 1.53400e-001 |
| 107 | 1.60500e-002 | 1.53401e-001 |
| 108 | 1.62000e-002 | 1.53402e-001 |
| 109 | 1.63500e-002 | 1.53403e-001 |
| 110 | 1.65000e-002 | 1.53404e-001 |
| 111 | 1.66500e-002 | 1.53404e-001 |
| 112 | 1.68000e-002 | 1.53405e-001 |
| 113 | 1.69500e-002 | 1.53406e-001 |
| 114 | 1.71000e-002 | 1.53407e-001 |
| 115 | 1.72500e-002 | 1.53408e-001 |
| 116 | 1.74000e-002 | 1.53409e-001 |
| 117 | 1.75500e-002 | 1.53410e-001 |
| 118 | 1.77000e-002 | 1.53411e-001 |
| 119 | 1.78500e-002 | 1.53412e-001 |
| 120 | 1.80000e-002 | 1.53413e-001 |
| 121 | 1.81500e-002 | 1.53413e-001 |
| 122 | 1.83000e-002 | 1.53414e-001 |
| 123 | 1.84500e-002 | 1.53415e-001 |
| 124 | 1.86000e-002 | 1.53416e-001 |
| 125 | 1.87500e-002 | 1.53417e-001 |
| 126 | 1.89000e-002 | 1.53418e-001 |
| 127 | 1.90500e-002 | 1.53419e-001 |
| 128 | 1.92000e-002 | 1.53420e-001 |
| 129 | 1.93500e-002 | 1.53421e-001 |
| 130 | 1.95000e-002 | 1.53422e-001 |
| 131 | 1.96500e-002 | 1.53422e-001 |
| 132 | 1.98000e-002 | 1.53423e-001 |
| 133 | 1.99500e-002 | 1.53424e-001 |
| 134 | 2.01000e-002 | 1.53425e-001 |
| 135 | 2.02500e-002 | 1.53426e-001 |

| | | |
|---|---|---|
| 136 | 2.04000e-002 | 1.53427e-001 |
| 137 | 2.05500e-002 | 1.53428e-001 |
| 138 | 2.07000e-002 | 1.53429e-001 |
| 139 | 2.08500e-002 | 1.53430e-001 |
| 140 | 2.10000e-002 | 1.53430e-001 |
| 141 | 2.11500e-002 | 1.53431e-001 |
| 142 | 2.13000e-002 | 1.53432e-001 |
| 143 | 2.14500e-002 | 1.53433e-001 |
| 144 | 2.16000e-002 | 1.53434e-001 |
| 145 | 2.17500e-002 | 1.53435e-001 |
| 146 | 2.19000e-002 | 1.53436e-001 |
| 147 | 2.20500e-002 | 1.53437e-001 |
| 148 | 2.22000e-002 | 1.53438e-001 |
| 149 | 2.23500e-002 | 1.53439e-001 |
| 150 | 2.25000e-002 | 1.53439e-001 |
| 151 | 2.26500e-002 | 1.53440e-001 |
| 152 | 2.28000e-002 | 1.53441e-001 |
| 153 | 2.29500e-002 | 1.53442e-001 |
| 154 | 2.31000e-002 | 1.53443e-001 |
| 155 | 2.32500e-002 | 1.53444e-001 |
| 156 | 2.34000e-002 | 1.53445e-001 |
| SLD(Cap.) | | |
| 157 | 2.35500e-002 | 1.52178e-001 |
| 158 | 2.37000e-002 | 1.52202e-001 |
| 159 | 2.38500e-002 | 1.52210e-001 |
| 160 | 2.40000e-002 | 1.52219e-001 |
| 161 | 2.41500e-002 | 1.52228e-001 |
| 162 | 2.43000e-002 | 1.52237e-001 |
| 163 | 2.44500e-002 | 1.52246e-001 |
| 164 | 2.46000e-002 | 1.52255e-001 |
| 165 | 2.47500e-002 | 1.52264e-001 |
| 166 | 2.49000e-002 | 1.52273e-001 |
| 167 | 2.50500e-002 | 1.52282e-001 |
| 168 | 2.52000e-002 | 1.52291e-001 |
| 169 | 2.53500e-002 | 1.39462e-001 |

**PROJECT TITLE :**

| | Company | | Client | |
|---|---|---|---|---|
| MIDAS | Author | Nicola | File Name | US1A - scuola muscoline - PE - PO - 08.txt |

| | | |
|---|---|---|
| 170 | 2.55000e-002 | 1.39616e-001 |
| 171 | 2.56500e-002 | 1.00380e-001 |
| 172 | 2.58000e-002 | 1.00389e-001 |
| 173 | 2.59500e-002 | 1.00397e-001 |
| 174 | 2.61000e-002 | 1.00406e-001 |
| 175 | 2.62500e-002 | 6.97063e-002 |
| 176 | 2.64000e-002 | 6.97548e-002 |
| 177 | 2.65500e-002 | 4.67827e-002 |
| 178 | 2.67000e-002 | 4.69138e-002 |
| 179 | 2.68500e-002 | 4.69507e-002 |
| 180 | 2.70000e-002 | 4.69874e-002 |
| 181 | 2.71500e-002 | 4.70240e-002 |
| 182 | 2.73000e-002 | 4.59231e-002 |
| 183 | 2.74500e-002 | 4.59538e-002 |
| 184 | 2.76000e-002 | 4.59845e-002 |
| 185 | 2.77500e-002 | 4.60152e-002 |
| 186 | 2.79000e-002 | 4.60175e-002 |
| 187 | 2.80500e-002 | 4.60197e-002 |
| 188 | 2.82000e-002 | 4.60218e-002 |
| 189 | 2.83500e-002 | 4.60239e-002 |
| 190 | 2.85000e-002 | 4.60260e-002 |
| 191 | 2.86500e-002 | 4.60282e-002 |
| 192 | 2.88000e-002 | 4.60303e-002 |
| 193 | 2.89500e-002 | 4.60324e-002 |
| 194 | 2.91000e-002 | 4.60345e-002 |
| 195 | 2.92500e-002 | 4.60367e-002 |
| 196 | 2.94000e-002 | 4.60388e-002 |
| 197 | 2.95500e-002 | 4.60409e-002 |
| 198 | 2.97000e-002 | 4.60430e-002 |
| 199 | 2.98500e-002 | 4.60452e-002 |
| 200 | 3.00000e-002 | 4.60473e-002 |

| | | |
|---|---|---|
| Min : | 1.50000e-005 | 5.35012e-003 |
| Max : | 2.34000e-002 | 1.53445e-001 |

**PROJECT TITLE :**

| | Company | | Client | |
|---|---|---|---|---|
| MIDAS | Author | Nicola | File Name | US1A - scuola muscoline - PE - PO - 08.txt |

```
 ** midas Gen Pushover Curve Data **
_____________________________________________

[ Target Displacement ]
* Disp. Control Node : 195
* Direction : DY
* Load Pattern Type : Accerelation
* SLO- Demand, Capacity, Step, Remark : 0.005723, 0.015779, 12, OK
* SLD- Demand, Capacity, Step, Remark : 0.005723, 0.023550, 12, OK
* SLV- Demand, Capacity, Step, Remark : 0.005723, -, 12, -
* SLC- Demand, Capacity, Step, Remark : 0.005723, -, 12, -
_____________________________________________

- Target Displacement of SLO
  m* = 325.014
  Gamma = 1
  Fy* = 485.436
  T* = 0.115359
  Se(T*) = 0.566324g
  det* = 0.00187199
  qu = 3.71815
  Tc = 0.44
  dt* = 0.00572321 (short period range)
  dt = 0.00572321

- Target Displacement of SLD
  m* = 325.014
  Gamma = 1
  Fy* = 485.436
  T* = 0.115359
  Se(T*) = 0.566324g
  det* = 0.00187199
  qu = 3.71815
  Tc = 0.44
  dt* = 0.00572321 (short period range)
  dt = 0.00572321

- Target Displacement of SLV
  m* = 325.014
  Gamma = 1
  Fy* = 485.436
  T* = 0.115359
  Se(T*) = 0.566324g
  det* = 0.00187199
  qu = 3.71815
  Tc = 0.44
  dt* = 0.00572321 (short period range)
  dt = 0.00572321

- Target Displacement of SLC
  m* = 325.014
  Gamma = 1
  Fy* = 485.436
  T* = 0.115359
  Se(T*) = 0.566324g
  det* = 0.00187199
  qu = 3.71815
  Tc = 0.44
  dt* = 0.00572321 (short period range)
  dt = 0.00572321
_____________________________________________

[ Spectral Displacement(Sd) vs. Spectral Acceleration(Sa) ]

Load Case :GU2 -Y   Unit:  kN,m


 Node : 195   Direction : DY   Mode 2
```

**PROJECT TITLE :**

| | Company | | Client | |
|---|---|---|---|---|
| MIDAS | Author | Nicola | File Name | US1A - scuola muscoline - PE - PO - 08.txt |

| Step | Spectral Displacement(Sd) | Spectral Acceleration(Sa) | Status of Step |
|---|---|---|---|
| 0 | 1.50000e-005 | 5.20421e-003 | |
| 1 | 1.50000e-004 | 5.20421e-002 | |
| 2 | 3.00000e-004 | 9.10268e-002 | |
| 3 | 4.50000e-004 | 1.26216e-001 | |
| 4 | 6.00000e-004 | 1.37446e-001 | |
| 5 | 7.50000e-004 | 1.40409e-001 | |
| 6 | 9.00000e-004 | 1.42519e-001 | |
| 7 | 1.05000e-003 | 1.44178e-001 | |
| 8 | 1.20000e-003 | 1.45205e-001 | |
| 9 | 1.35000e-003 | 1.46232e-001 | |
| 10 | 1.50000e-003 | 1.47259e-001 | |
| 11 | 1.65000e-003 | 1.48287e-001 | |
| 12 | 1.80000e-003 | 1.49049e-001 | SLO(Dem.)SLD(Dem.)SLV(Dem.)SLC(Dem.) |
| 13 | 1.95000e-003 | 1.49670e-001 | |
| 14 | 2.10000e-003 | 1.49984e-001 | |
| 15 | 2.25000e-003 | 1.50298e-001 | |
| 16 | 2.40000e-003 | 1.50612e-001 | |
| 17 | 2.55000e-003 | 1.50926e-001 | |
| 18 | 2.70000e-003 | 1.51143e-001 | |
| 19 | 2.85000e-003 | 1.51244e-001 | |
| 20 | 3.00000e-003 | 1.51345e-001 | |
| 21 | 3.15000e-003 | 1.51446e-001 | |
| 22 | 3.30000e-003 | 1.51547e-001 | |
| 23 | 3.45000e-003 | 1.51648e-001 | |
| 24 | 3.60000e-003 | 1.51749e-001 | |
| 25 | 3.75000e-003 | 1.51851e-001 | |
| 26 | 3.90000e-003 | 1.51952e-001 | |
| 27 | 4.05000e-003 | 1.52053e-001 | |
| 28 | 4.20000e-003 | 1.52154e-001 | |
| 29 | 4.35000e-003 | 1.52255e-001 | |
| 30 | 4.50000e-003 | 1.52356e-001 | |
| 31 | 4.65000e-003 | 1.52457e-001 | |

**PROJECT TITLE :**

| | | | | |
|---|---|---|---|---|
| MIDAS | Company | | Client | |
| | Author | Nicola | File Name | US1A - scuola muscoline - PE - PO - 08.txt |

| | | |
|---|---|---|
| 32 | 4.80000e-003 | 1.52558e-001 |
| 33 | 4.95000e-003 | 1.52634e-001 |
| 34 | 5.10000e-003 | 1.52704e-001 |
| 35 | 5.25000e-003 | 1.52775e-001 |
| 36 | 5.40000e-003 | 1.52845e-001 |
| 37 | 5.55000e-003 | 1.52915e-001 |
| 38 | 5.70000e-003 | 1.52986e-001 |
| 39 | 5.85000e-003 | 1.53056e-001 |
| 40 | 6.00000e-003 | 1.53126e-001 |
| 41 | 6.15000e-003 | 1.53151e-001 |
| 42 | 6.30000e-003 | 1.53157e-001 |
| 43 | 6.45000e-003 | 1.53158e-001 |
| 44 | 6.60000e-003 | 1.53159e-001 |
| 45 | 6.75000e-003 | 1.53160e-001 |
| 46 | 6.90000e-003 | 1.53161e-001 |
| 47 | 7.05000e-003 | 1.53162e-001 |
| 48 | 7.20000e-003 | 1.53163e-001 |
| 49 | 7.35000e-003 | 1.53163e-001 |
| 50 | 7.50000e-003 | 1.53164e-001 |
| 51 | 7.65000e-003 | 1.53165e-001 |
| 52 | 7.80000e-003 | 1.53166e-001 |
| 53 | 7.95000e-003 | 1.53167e-001 |
| 54 | 8.10000e-003 | 1.53168e-001 |
| 55 | 8.25000e-003 | 1.53169e-001 |
| 56 | 8.40000e-003 | 1.53170e-001 |
| 57 | 8.55000e-003 | 1.53171e-001 |
| 58 | 8.70000e-003 | 1.53172e-001 |
| 59 | 8.85000e-003 | 1.53172e-001 |
| 60 | 9.00000e-003 | 1.53173e-001 |
| 61 | 9.15000e-003 | 1.53174e-001 |
| 62 | 9.30000e-003 | 1.53175e-001 |
| 63 | 9.45000e-003 | 1.53176e-001 |
| 64 | 9.60000e-003 | 1.53177e-001 |
| 65 | 9.75000e-003 | 1.53178e-001 |
| 66 | 9.90000e-003 | 1.53179e-001 |

**PROJECT TITLE :**

| | | | | |
|---|---|---|---|---|
| MIDAS | Company | | Client | |
| | Author | Nicola | File Name | US1A - scuola muscoline - PE - PO - 08.txt |

| | | |
|---|---|---|
| 67 | 1.00500e-002 | 1.53180e-001 |
| 68 | 1.02000e-002 | 1.53181e-001 |
| 69 | 1.03500e-002 | 1.53181e-001 |
| 70 | 1.05000e-002 | 1.53182e-001 |
| 71 | 1.06500e-002 | 1.53183e-001 |
| 72 | 1.08000e-002 | 1.53184e-001 |
| 73 | 1.09500e-002 | 1.53185e-001 |
| 74 | 1.11000e-002 | 1.53186e-001 |
| 75 | 1.12500e-002 | 1.53187e-001 |
| 76 | 1.14000e-002 | 1.53188e-001 |
| 77 | 1.15500e-002 | 1.53189e-001 |
| 78 | 1.17000e-002 | 1.53190e-001 |
| 79 | 1.18500e-002 | 1.53190e-001 |
| 80 | 1.20000e-002 | 1.53191e-001 |
| 81 | 1.21500e-002 | 1.53192e-001 |
| 82 | 1.23000e-002 | 1.53193e-001 |
| 83 | 1.24500e-002 | 1.53194e-001 |
| 84 | 1.26000e-002 | 1.53195e-001 |
| 85 | 1.27500e-002 | 1.53196e-001 |
| 86 | 1.29000e-002 | 1.53197e-001 |
| 87 | 1.30500e-002 | 1.53198e-001 |
| 88 | 1.32000e-002 | 1.53199e-001 |
| 89 | 1.33500e-002 | 1.53199e-001 |
| 90 | 1.35000e-002 | 1.53200e-001 |
| 91 | 1.36500e-002 | 1.53201e-001 |
| 92 | 1.38000e-002 | 1.53202e-001 |
| 93 | 1.39500e-002 | 1.53203e-001 |
| 94 | 1.41000e-002 | 1.53204e-001 |
| 95 | 1.42500e-002 | 1.53205e-001 |
| 96 | 1.44000e-002 | 1.53206e-001 |
| 97 | 1.45500e-002 | 1.53207e-001 |
| 98 | 1.47000e-002 | 1.53207e-001 |
| 99 | 1.48500e-002 | 1.53208e-001 |
| 100 | 1.50000e-002 | 1.53209e-001 |

**PROJECT TITLE :**

| | | | | |
|---|---|---|---|---|
| MIDAS | Company | | Client | |
| | Author | Nicola | File Name | US1A - scuola muscoline - PE - PO - 08.txt |

| | | |
|---|---|---|
| 101 | 1.51500e-002 | 1.53210e-001 |
| 102 | 1.53000e-002 | 1.53211e-001 |
| 103 | 1.54500e-002 | 1.53212e-001 |
| 104 | 1.56000e-002 | 1.53213e-001 |
| 105 | 1.57500e-002 | 1.53214e-001 |
| 106 | 1.59000e-002 | 1.53215e-001 |
| 107 | 1.60500e-002 | 1.53216e-001 |
| 108 | 1.62000e-002 | 1.53216e-001 |
| 109 | 1.63500e-002 | 1.53217e-001 |
| 110 | 1.65000e-002 | 1.53218e-001 |
| 111 | 1.66500e-002 | 1.53219e-001 |
| 112 | 1.68000e-002 | 1.53220e-001 |
| 113 | 1.69500e-002 | 1.53221e-001 |
| 114 | 1.71000e-002 | 1.53222e-001 |
| 115 | 1.72500e-002 | 1.53223e-001 |
| 116 | 1.74000e-002 | 1.53224e-001 |
| 117 | 1.75500e-002 | 1.53224e-001 |
| 118 | 1.77000e-002 | 1.53225e-001 |
| 119 | 1.78500e-002 | 1.53226e-001 |
| 120 | 1.80000e-002 | 1.53227e-001 |
| 121 | 1.81500e-002 | 1.53228e-001 |
| 122 | 1.83000e-002 | 1.53229e-001 |
| 123 | 1.84500e-002 | 1.53230e-001 |
| 124 | 1.86000e-002 | 1.53231e-001 |
| 125 | 1.87500e-002 | 1.53232e-001 |
| 126 | 1.89000e-002 | 1.53233e-001 |
| 127 | 1.90500e-002 | 1.53233e-001 |
| 128 | 1.92000e-002 | 1.53234e-001 |
| 129 | 1.93500e-002 | 1.53235e-001 |
| 130 | 1.95000e-002 | 1.53236e-001 |
| 131 | 1.96500e-002 | 1.53237e-001 |
| 132 | 1.98000e-002 | 1.53238e-001 |
| 133 | 1.99500e-002 | 1.53239e-001 |
| 134 | 2.01000e-002 | 1.53240e-001 |
| 135 | 2.02500e-002 | 1.53241e-001 |

| | | |
|---|---|---|
| 136 | 2.04000e-002 | 1.53242e-001 |
| 137 | 2.05500e-002 | 1.53242e-001 |
| 138 | 2.07000e-002 | 1.53243e-001 |
| 139 | 2.08500e-002 | 1.53244e-001 |
| 140 | 2.10000e-002 | 1.53245e-001 |
| 141 | 2.11500e-002 | 1.53246e-001 |
| 142 | 2.13000e-002 | 1.53247e-001 |
| 143 | 2.14500e-002 | 1.53248e-001 |
| 144 | 2.16000e-002 | 1.53249e-001 |
| 145 | 2.17500e-002 | 1.53250e-001 |
| 146 | 2.19000e-002 | 1.53250e-001 |
| 147 | 2.20500e-002 | 1.53251e-001 |
| 148 | 2.22000e-002 | 1.53252e-001 |
| 149 | 2.23500e-002 | 1.53253e-001 |
| 150 | 2.25000e-002 | 1.53254e-001 |
| 151 | 2.26500e-002 | 1.53255e-001 |
| 152 | 2.28000e-002 | 1.53256e-001 |
| 153 | 2.29500e-002 | 1.53257e-001 |
| 154 | 2.31000e-002 | 1.53258e-001 |
| 155 | 2.32500e-002 | 1.53259e-001 |
| 156 | 2.34000e-002 | 1.53259e-001 |
| 157 | 2.35500e-002 | 1.53260e-001 |
| SLD(Cap.) | | |
| 158 | 2.37000e-002 | 1.52010e-001 |
| 159 | 2.38500e-002 | 1.52019e-001 |
| 160 | 2.40000e-002 | 1.52028e-001 |
| 161 | 2.41500e-002 | 1.52037e-001 |
| 162 | 2.43000e-002 | 1.52046e-001 |
| 163 | 2.44500e-002 | 1.52054e-001 |
| 164 | 2.46000e-002 | 1.52063e-001 |
| 165 | 2.47500e-002 | 1.52072e-001 |
| 166 | 2.49000e-002 | 1.52081e-001 |
| 167 | 2.50500e-002 | 1.52090e-001 |
| 168 | 2.52000e-002 | 1.52098e-001 |
| 169 | 2.53500e-002 | 1.52107e-001 |

**PROJECT TITLE :**

| | Company | | Client | |
|---|---|---|---|---|
| MIDAS | Author | Nicola | File Name | US1A - scuola muscoline - PE - PO - 08.txt |

| | | |
|---|---|---|
| 170 | 2.55000e-002 | 1.52116e-001 |
| 171 | 2.56500e-002 | 1.39290e-001 |
| 172 | 2.58000e-002 | 1.00137e-001 |
| 173 | 2.59500e-002 | 1.00206e-001 |
| 174 | 2.61000e-002 | 6.95052e-002 |
| 175 | 2.62500e-002 | 6.95540e-002 |
| 176 | 2.64000e-002 | 6.95912e-002 |
| 177 | 2.65500e-002 | 4.66083e-002 |
| 178 | 2.67000e-002 | 4.67376e-002 |
| 179 | 2.68500e-002 | 4.67747e-002 |
| 180 | 2.70000e-002 | 4.68117e-002 |
| 181 | 2.71500e-002 | 4.68488e-002 |
| 182 | 2.73000e-002 | 4.68858e-002 |
| 183 | 2.74500e-002 | 4.69229e-002 |
| 184 | 2.76000e-002 | 4.69477e-002 |
| 185 | 2.77500e-002 | 4.69477e-002 |
| 186 | 2.79000e-002 | 4.58222e-002 |
| 187 | 2.80500e-002 | 4.58282e-002 |
| 188 | 2.82000e-002 | 4.58303e-002 |
| 189 | 2.83500e-002 | 4.58324e-002 |
| 190 | 2.85000e-002 | 4.58345e-002 |
| 191 | 2.86500e-002 | 4.58366e-002 |
| 192 | 2.88000e-002 | 4.58387e-002 |
| 193 | 2.89500e-002 | 4.58408e-002 |
| 194 | 2.91000e-002 | 4.58429e-002 |
| 195 | 2.92500e-002 | 4.58449e-002 |
| 196 | 2.94000e-002 | 4.58470e-002 |
| 197 | 2.95500e-002 | 4.58491e-002 |
| 198 | 2.97000e-002 | 4.58512e-002 |
| 199 | 2.98500e-002 | 4.58533e-002 |
| 200 | 3.00000e-002 | 4.58554e-002 |

| | | |
|---|---|---|
| Min : | 1.50000e-005 | 5.20421e-003 |
| Max : | 2.35500e-002 | 1.53260e-001 |

### 2.2.2 Diaframma – catene

***Verifica catene perimetrali Φ24mm***

*Tabella 1 – Verifica a trazione catene perimetrali diaframmi di piano.*

| Direzione | Corpo | Tipo di profilo | $F_{E,max}$ [kN] | Luce L [m] | Carico distribuito f [kN/m ] | Freccia Z[m] | | Momento M [kNm] | Spinte Tn [kN] | | Nome catena | Acciaio $f_{yk}$ [MPa] | Resistenza profili $F_{rd}$ [kN] |
|---|---|---|---|---|---|---|---|---|---|---|---|---|---|
| Y | A | 2 Catene Ø24 | 90.32 | 15.60 | 5.79 | Z1 | 3.33 | 176.12 | T1=T2 | 52.89 | A3 | 275 | 236.85 |
| | A | 2 Catene Ø24 | 265.37 | 13.25 | 20.03 | Z2 | 4.37 | 439.52 | T3=T4 | 100.58 | A5 | 275 | 236.85 |
| | A | 2 Catene Ø24 | 90.32 | 15.6 | 5.79 | | | | R | 45.16 | B1 | 275 | 236.85 |
| | A | 2 Catene Ø24 | 265.37 | 13.25 | 20.03 | | | | R | 132.69 | B4 | 275 | 236.85 |
| | A | 2 Catene Ø24 | 265.37 | 13.25 | 20.03 | | | | R | 177.85 | B2 | 275 | 236.85 |
| X | A | 2 Catene Ø24 | 213.5 | 16.50 | 12.94 | Z3 | 5.48 | 440.24 | T5=T6 | 80.34 | B4 | 275 | 236.85 |
| | A | 2 Catene Ø24 | 110.8 | 5.70 | 19.43 | Z4 | 2.20 | 78.91 | T7=T8 | 35.87 | B2 | 275 | 236.85 |
| | A | 2 Catene Ø24 | 213.5 | 16.50 | 12.94 | | | | R | 106.75 | A5-A2 | 275 | 236.85 |
| | A | 2 Catene Ø24 | 110.8 | 5.70 | 19.44 | | | | R | 55.40 | A1 | 275 | 236.85 |

Si riporta di seguito la verifica della compressione generata dalla piastra di fissaggio sulla parete in muratura.

*Tabella 2 - Verifica ancoraggio catena.*

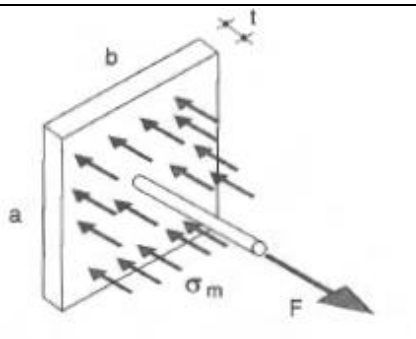


Caratteristiche geometriche:

a=20cm

b=60cm

t=2cm

$\sigma_m$=F/(a·b) =177.85kN/(0.2m·0.6m) =
**1.48MPa** < 3.45MPa

***Verifica catene interne Φ24mm***

*Tabella 3 - Verifica a trazione catene interne diaframmi di piano.*

| Direzione | Corpo | Tipo di profilo | Area [$m^2$] | Sollecitazione catena $F_{E,d}$ [kN] | Nome catena | Acciaio $f_{yk}$ [MPa] | Resistenza profili $F_{rd}$ [kN] |
|---|---|---|---|---|---|---|---|
| Y | A | 2 Catena Ø24 | 27.20 | 21.84 | B3 | 275 | 236.85 |
| X | A | 2 Catena Ø24 | 33.94 | 27.25 | A4 | 275 | 236.85 |
| | A | 2 Catena Ø24 | 21.34 | 72.51 | A3 | 275 | 236.85 |

***Verifica cappa in calcestruzzo***

*Tabella 4 – Valutazione dimensione archi diaframmi di piano.*

| Direzione | Corpo | Spessore cappa [mm] | Pendenza locale arco $\alpha_{0,n}$ [°] | Spinta arco $T_n$ [N] | | Azione assiale arco $C_n$ [N] | | Resisenza a compressione cls $f_{c,m}$ [MPa] | Larghezza arco $b_n$ [mm] |
|---|---|---|---|---|---|---|---|---|---|
| Y | A | 30 | 23 | $T_1$ | 52890 | $C_1(x)$ | 57453 | 8.40 | 228 |
| | A | 30 | 33 | $T_3$ | 100576 | $C_2(x)$ | 119901 | 8.40 | 476 |
| X | A | 30 | 34 | $T_5$ | 80336 | $C_3(x)$ | 96883 | 8.40 | 385 |
| | A | 30 | 38 | $T_7$ | 35868 | $C_4(x)$ | 45505 | 8.40 | 181 |

## 2.3. Corpo B

### *2.3.1 Intonaco armato e nuovo sistema sismo-resistente*

```
;---------------------------------------------------------------------------
;  midas Gen Text(MGT) File.
;  Date : 2020/6/15
;---------------------------------------------------------------------------

*VERSION
   8.8.1

*UNIT    ; Unit System
; FORCE, LENGTH, HEAT, TEMPER
   KN   , M, BTU, F

*PROJINFO    ; Project Information
; PROJECT, REVISION, USER, EMAIL, ADDRESS, TEL, FAX, CLIENT, TITLE, ENGINEER, EDATE
    ; One Line per Data
; CHECK1, CDATE1, CHECK2, CDATE2, CHECK3, CDATE3, APPROVE, ADATE, COMMENT
    ; One Line per Data
   USER=Nicola
   ADDRESS=DiMoRe

*STRUCTYPE    ; Structure Type
; iSTYP, iMASS, iSMAS, bMASSOFFSET, bSELFWEIGHT, GRAV, TEMPER, bALIGNBEAM, bALIGNSLAB,
 bROTRIGID
     0, 1, 1, NO, YES, 9.806, 0, NO, NO, YES

*REBAR-MATL-CODE    ; Rebar Material Code
; CONC_CODE, CONC_MDB, SRC_CODE, SRC_MDB
 NTC08(RC), B450C, ASTM(RC), Grade 60

*NODE    ; Nodes
; iNO, X, Y, Z
    38, -4.62217282048982e-006, 7.47939245575346, -1
    39, -4.62216798169379e-006, -4.16962180338487e-007, -1
    43, 7.04999537783322, -4.16961704274854e-007, -1
    49, 7.04999537783148, 12.7010418908237, -1
    55, 13.3499953778309, 12.701041890823, -1
    59, 13.3499953778312, 6.3499995830426, -1
    62, 13.3499953778309, -4.16960912019704e-007, -1
    86, 16.9499953778329, 9.89999958303782, -1
    90, 3.69999537783293, 12.3349995830378, -1
    92, 0.622495377828889, 7.47939245575443, -1
    93, 0.962495377831599, -4.16962180338487e-007, -1
    94, 7.04999537783235, 8.74999958303782, -1
    95, 7.81249537783191, 12.7010418908237, -1
    96, 10.2999953778315, 12.7010418908237, -1
    97, 12.6874953778308, 12.7010418908233, -1
    98, 13.3499953778309, 11.3277707369302, -1
    99, 11.0124953778315, 6.34999958304021, -1
   100, 13.3499953778309, 0.772499583038454, -1
   101, 12.4374953778308, -4.16961837501617e-007, -1
   103, 0.962495377831599, -4.16962180338487e-007, 3.35
   107, 7.04999537783322, -4.16961704274854e-007, 3.35
   108, 12.4374953778308, -4.16961837501617e-007, 3.35
   109, 0.622495377828889, 7.47939245575443, 3.35
   111, 11.0124953778315, 6.34999958304021, 3.35
   112, 7.81249537783191, 12.7010418908237, 3.35
   113, 10.2999953778315, 12.7010418908237, 3.35
   114, 12.6874953778308, 12.7010418908233, 3.35
   166, 7.04999537783325, 0.81197842914518, -1
   167, 7.04999537783227, 4.69947842914436, -1
   168, 7.04999537783148, 12.1130207369307, -1
   173, 16.9499953778329, 13.1120545236714, -1
```

```
179, 7.04999537783325, 0.81197842914518, 3.35
180, 7.04999537783227, 4.69947842914436, 3.35
181, 13.3499953778309, 0.772499583038454, 3.35
182, 13.3499953778326, 5.45499958303782, -1
183, 13.3499953778326, 5.45499958303782, 3.35
184, 13.3499953778312, 6.3499995830426, 3.35
185, 7.04999537783235, 8.74999958303782, 3.35
186, 3.69999537783293, 12.3349995830378, 3.35
187, 7.04999537783148, 12.1130207369307, 3.35
188, 13.3499953778309, 11.3277707369302, 3.35
189, 16.9499953778329, 13.1120545236714, 3.35
202, -4.62217282048982e-006, 7.47939245575346, 3.35
203, -4.62216798169379e-006, -4.16962180338487e-007, 3.35
204, 7.04999537783148, 12.7010418908237, 3.35
205, 13.3499953778309, -4.16960912019704e-007, 3.35
208, 16.9499953778329, 9.89999958303782, 3.35
231, -4.62216798169379e-006, 3.79999958303782, -1
236, -4.62216798169379e-006, 3.79999958303782, 3.35
239, 13.3499953778309, 12.701041890823, 3.35
241, 16.9499953778329, 12.701041890823, 3.35
242, 16.9499953778329, 11.3277707369302, 3.35
243, 7.04999537783235, 6.34999958303967, 3.35
245, 13.349995377831, 9.89999958303766, 3.35
248, 3.69999537783293, 7.47939245575453, -1
251, 3.69999537783235, 7.47939245575453, 3.35
253, 3.69999537783289, 12.7010418908233, 3.35
449, 7.17399537783235, 6.34999958303967, 3.35
450, 7.17399537783273, 6.34999958303827, -1
451, 16.9499953778329, 5.46999958303782, -1
452, 16.9499953778329, 5.46999958303782, 3.35
453, 16.9499953778329, 1.21999958303782, -1
454, 16.9499953778329, 1.21999958303782, 3.35
455, 16.9499953778309, -4.16960912019704e-007, 3.35
456, 7.66249537783322, -4.16961704274854e-007, -1
457, 7.66249537783322, -4.16961704274854e-007, 3.35
466, 3.69999537783293, 12.3349995830378, 2.75
469, 3.69999537783293, 12.3349995830378, 3.05
497, 7.81249537783191, 12.7010418908237, 1.9
498, 10.2999953778315, 12.7010418908237, 1.9
499, 12.6874953778308, 12.7010418908233, 1.9
500, 7.81249537783191, 12.7010418908237, 2.625
501, 10.2999953778315, 12.7010418908237, 2.625
502, 12.6874953778308, 12.7010418908233, 2.625
503, 11.1749953778315, 12.7010418908237, 2.625
504, 9.42499537783148, 12.7010418908237, 2.625
505, 8.57749537783191, 12.7010418908237, 2.625
506, 12.0224953778308, 12.7010418908233, 2.625
507, 11.0124953778315, 6.34999958304021, 1.9
508, 7.17399537783235, 6.34999958303967, 1.9
509, 11.0124953778315, 6.34999958304021, 2.625
510, 7.17399537783235, 6.34999958303967, 2.625
511, 8.67249537783147, 6.34999958304021, 2.625
512, 7.29899537783235, 6.34999958303967, 2.625
513, 0.962495377831599, -4.16962180338487e-007, 2.9
515, 12.4374953778308, -4.16961837501617e-007, 2.9
516, 0.622495377828889, 7.47939245575443, 2.9
517, 13.3499953778309, 0.772499583038454, 2.9
518, 13.3499953778326, 5.45499958303782, 2.9
519, 13.3499953778312, 6.3499995830426, 2.9
520, 3.69999537783235, 7.47939245575453, 2.9
521, 7.66249537783322, -4.16961704274854e-007, 2.9
522, 13.3499953778309, 11.3277707369302, 2.9
```

```
   523, 0.962495377831599, -4.16962180338487e-007, 3.125
   525, 12.4374953778308, -4.16961837501617e-007, 3.125
   526, 0.622495377828889, 7.47939245575443, 3.125
   527, 13.3499953778309, 0.772499583038454, 3.125
   528, 13.3499953778326, 5.45499958303782, 3.125
   529, 13.3499953778312, 6.3499995830426, 3.125
   530, 3.69999537783235, 7.47939245575453, 3.125
   531, 7.66249537783322, -4.16961704274854e-007, 3.125
   532, 13.3499953778309, 11.3277707369302, 3.125
   533, 1.24749537782889, 7.47939245575443, 3.125
   534, 3.46499537783235, 7.47939245575453, 3.125
   535, 1.9274953778316, -4.16962180338487e-007, 3.125
   536, 5.17499537783177, -4.1696276298353e-007, 3.125
   537, 11.5224953778308, -4.16961837501617e-007, 3.125
   538, 8.27499537783322, -4.16961704274854e-007, 3.125
   539, 13.3499953778309, 1.52449958303845, 3.125
   540, 13.3499953778326, 4.85499958303782, 3.125
   541, 13.3499953778312, 6.6499995830426, 3.125
   542, 13.3499953778309, 9.95277073693018, 3.125
   543, 7.04999537783227, 4.69947842914436, 1.9
   544, 7.04999537783235, 8.74999958303782, 1.9
   545, 7.04999537783148, 12.1130207369307, 1.9
   546, 7.04999537783227, 4.69947842914436, 2.625
   547, 7.04999537783235, 8.74999958303782, 2.625
   548, 7.04999537783148, 12.1130207369307, 2.625
   549, 7.04999537783227, 6.47447842914436, 2.625
   550, 7.04999537783235, 8.12499958303782, 2.625
   551, 7.04999537783235, 9.37499958303782, 2.625
   552, 7.04999537783148, 11.5230207369307, 2.625
   553, 6.11499537783177, -4.1696276298353e-007, 3.35
   554, 6.11499537783177, -4.1696276298353e-007, -1
   555, 6.11499537783177, -4.1696276298353e-007, 2.9
   556, 6.11499537783177, -4.1696276298353e-007, 3.125
   557, 7.81249537783191, 12.9510418908237, -0.81
   558, 10.2999953778315, 12.9510418908237, -0.81
   559, 7.81249537783191, 12.9510418908237, 3.35
   560, 10.2999953778315, 12.9510418908237, 3.35

*ELEMENT    ; Elements
; iEL, TYPE, iMAT, iPRO, iN1, iN2, ANGLE, iSUB,                      ; Frame  Element
; iEL, TYPE, iMAT, iPRO, iN1, iN2, ANGLE, iSUB, EXVAL, EXVAL2, bLMT ; Comp/Tens Truss
; iEL, TYPE, iMAT, iPRO, iN1, iN2, iN3, iN4, iSUB, iWID , LCAXIS    ; Planar Element
; iEL, TYPE, iMAT, iPRO, iN1, iN2, iN3, iN4, iN5, iN6, iN7, iN8     ; Solid  Element
     3, BEAM  ,    7,   100,   231,   236,    90,     0
     6, BEAM  ,    1,     5,    92,   516,     0,     0
     7, BEAM  ,    1,     1,    93,   513,     0,     0
    13, BEAM  ,    1,     6,   248,   520,     0,     0
    14, BEAM  ,    1,   108,    90,   466,    90,     0
    20, BEAM  ,    1,   101,   166,   179,    90,     0
    21, BEAM  ,    1,   103,   167,   543,    90,     0
    22, BEAM  ,    1,   107,    94,   544,    90,     0
    23, BEAM  ,    1,   109,   168,   545,    90,     0
    25, BEAM  ,    3,     8,    95,   497,     0,     0
    28, BEAM  ,    3,     9,    96,   498,     0,     0
    29, BEAM  ,    3,     7,    99,   507,     0,     0
    31, BEAM  ,    1,     4,   101,   515,     0,     0
    32, BEAM  ,    3,    10,    97,   499,     0,     0
    35, BEAM  ,    1,   104,   100,   517,    90,     0
    36, BEAM  ,    1,   105,   182,   518,    90,     0
    37, BEAM  ,    1,   106,    59,   519,    90,     0
    38, BEAM  ,    1,   110,    98,   522,    90,     0
    41, BEAM  ,    1,   700,   173,   189,    90,     0
```

```
2000, BEAM  ,    3,   700,   450,   508,     0,     0
2004, BEAM  ,    1,   700,    39,   203,     0,     0
2005, BEAM  ,    1,   700,    38,   202,     0,     0
2008, BEAM  ,    1,   700,    62,   205,     0,     0
2009, BEAM  ,    1,   700,    86,   208,     0,     0
2011, BEAM  ,    1,   700,    49,   204,     0,     0
2012, BEAM  ,    1,   700,    55,   239,     0,     0
6000, BEAM  ,    6,   701,   203,   103,     0,     0
6001, BEAM  ,    6,   701,   103,   553,     0,     0
6003, BEAM  ,    6,   701,   107,   457,     0,     0
6004, BEAM  ,    6,   701,   108,   205,     0,     0
6005, BEAM  ,    6,   701,   205,   181,     0,     0
6006, BEAM  ,    6,   702,   107,   179,     0,     0
6007, BEAM  ,    6,   701,   203,   236,     0,     0
6009, BEAM  ,    6,   702,   179,   180,     0,     0
6010, BEAM  ,    6,   701,   181,   183,     0,     0
6012, BEAM  ,    6,   701,   236,   202,     0,     0
6013, BEAM  ,    6,   702,   180,   243,     0,     0
6015, BEAM  ,    6,   701,   183,   184,     0,     0
6016, BEAM  ,    6,   702,   243,   449,     0,     0
6017, BEAM  ,    6,   702,   449,   111,     0,     0
6018, BEAM  ,    6,   702,   111,   184,     0,     0
6020, BEAM  ,    6,   701,   202,   109,     0,     0
6021, BEAM  ,    6,   701,   109,   251,     0,     0
6022, BEAM  ,    6,   702,   243,   185,     0,     0
6023, BEAM  ,    6,   701,   184,   245,     0,     0
6024, BEAM  ,    6,   701,   245,   208,     0,     0
6029, BEAM  ,    6,   701,   251,   186,     0,     0
6030, BEAM  ,    6,   702,   185,   187,     0,     0
6031, BEAM  ,    6,   702,   245,   188,     0,     0
6032, BEAM  ,    6,   704,   208,   242,     0,     0
6035, BEAM  ,    6,   702,   188,   239,     0,     0
6036, BEAM  ,    6,   704,   242,   241,     0,     0
6037, BEAM  ,    6,   702,   187,   204,     0,     0
6038, BEAM  ,    6,   701,   186,   253,     0,     0
6039, BEAM  ,    6,   702,   253,   204,     0,     0
6040, BEAM  ,    6,   702,   204,   112,     0,     0
6041, BEAM  ,    6,   702,   112,   113,     0,     0
6042, BEAM  ,    6,   702,   113,   114,     0,     0
6043, BEAM  ,    6,   702,   114,   239,     0,     0
6044, BEAM  ,    6,   704,   239,   241,     0,     0
6045, BEAM  ,    6,   704,   241,   189,     0,     0
6098, BEAM  ,    6,   707,   451,   452,     0,     0
6099, BEAM  ,    6,   707,   453,   454,     0,     0
6100, BEAM  ,    6,   708,   454,   452,     0,     0
6101, BEAM  ,    6,   708,   452,   208,     0,     0
6102, BEAM  ,    6,   708,   455,   454,     0,     0
6103, BEAM  ,    6,   708,   205,   455,     0,     0
6104, BEAM  ,    1,   700,    43,   107,     0,     0
6105, BEAM  ,    6,   701,   457,   108,     0,     0
6106, BEAM  ,    6,   701,   553,   107,     0,     0
6107, BEAM  ,    1,     3,   456,   521,     0,     0
6114, BEAM  ,    2,   108,   466,   469,    90,     0
6117, BEAM  ,    2,   108,   469,   186,    90,     0
6151, BEAM  ,    4,     8,   497,   500,     0,     0
6152, BEAM  ,    4,     9,   498,   501,     0,     0
6153, BEAM  ,    4,    10,   499,   502,     0,     0
6154, BEAM  ,    4,     8,   500,   112,     0,     0
6155, BEAM  ,    4,     9,   501,   113,     0,     0
6156, BEAM  ,    4,    10,   502,   114,     0,     0
6157, BEAM  ,    4,   710,   500,   505,     0,     0
6158, BEAM  ,    4,   710,   501,   503,     0,     0
```

```
6159, BEAM  ,    3,   710,   503,   506,     0,     0
6160, BEAM  ,    4,   710,   504,   501,     0,     0
6161, BEAM  ,    3,   710,   505,   504,     0,     0
6162, BEAM  ,    4,   710,   506,   502,     0,     0
6163, BEAM  ,    4,     7,   507,   509,     0,     0
6164, BEAM  ,    4,   700,   508,   510,     0,     0
6165, BEAM  ,    4,     7,   509,   111,     0,     0
6166, BEAM  ,    4,   700,   510,   449,     0,     0
6167, BEAM  ,    4,   710,   510,   512,     0,     0
6168, BEAM  ,    4,   710,   511,   509,     0,     0
6169, BEAM  ,    3,   710,   512,   511,     0,     0
6170, BEAM  ,    2,     1,   513,   523,     0,     0
6172, BEAM  ,    2,     4,   515,   525,     0,     0
6173, BEAM  ,    2,     5,   516,   526,     0,     0
6174, BEAM  ,    1,   104,   517,   527,    90,     0
6175, BEAM  ,    2,   105,   518,   528,    90,     0
6176, BEAM  ,    2,   106,   519,   529,    90,     0
6177, BEAM  ,    2,     6,   520,   530,     0,     0
6178, BEAM  ,    2,     3,   521,   531,     0,     0
6179, BEAM  ,    2,   110,   522,   532,    90,     0
6180, BEAM  ,    2,     1,   523,   103,     0,     0
6182, BEAM  ,    2,     4,   525,   108,     0,     0
6183, BEAM  ,    2,     5,   526,   109,     0,     0
6184, BEAM  ,    1,   104,   527,   181,    90,     0
6185, BEAM  ,    2,   105,   528,   183,    90,     0
6186, BEAM  ,    2,   106,   529,   184,    90,     0
6187, BEAM  ,    2,     6,   530,   251,     0,     0
6188, BEAM  ,    2,     3,   531,   457,     0,     0
6189, BEAM  ,    2,   110,   532,   188,    90,     0
6190, BEAM  ,    2,   712,   527,   539,     0,     0
6191, BEAM  ,    2,   712,   529,   541,     0,     0
6192, BEAM  ,    2,   712,   531,   538,     0,     0
6193, BEAM  ,    2,   712,   523,   535,     0,     0
6194, BEAM  ,    2,   712,   526,   533,     0,     0
6195, BEAM  ,    1,   712,   533,   534,     0,     0
6196, BEAM  ,    2,   712,   534,   530,     0,     0
6197, BEAM  ,    1,   712,   535,   536,     0,     0
6198, BEAM  ,    4,   712,   536,   556,     0,     0
6199, BEAM  ,    2,   712,   537,   525,     0,     0
6200, BEAM  ,    1,   712,   538,   537,     0,     0
6201, BEAM  ,    1,   712,   539,   540,     0,     0
6202, BEAM  ,    2,   712,   540,   528,     0,     0
6203, BEAM  ,    1,   712,   541,   542,     0,     0
6204, BEAM  ,    2,   712,   542,   532,     0,     0
6205, BEAM  ,    2,   103,   543,   546,    90,     0
6206, BEAM  ,    2,   107,   544,   547,    90,     0
6207, BEAM  ,    2,   109,   545,   548,    90,     0
6208, BEAM  ,    2,   103,   546,   180,    90,     0
6209, BEAM  ,    2,   107,   547,   185,    90,     0
6210, BEAM  ,    2,   109,   548,   187,    90,     0
6211, BEAM  ,    2,   710,   546,   549,     0,     0
6212, BEAM  ,    2,   710,   547,   551,     0,     0
6213, BEAM  ,    1,   710,   549,   550,     0,     0
6214, BEAM  ,    2,   710,   550,   547,     0,     0
6215, BEAM  ,    1,   710,   551,   552,     0,     0
6216, BEAM  ,    2,   710,   552,   548,     0,     0
6218, BEAM  ,    3,    11,   554,   555,     0,     0
6219, BEAM  ,    4,    11,   555,   556,     0,     0
6220, BEAM  ,    4,    11,   556,   553,     0,     0
6221, BEAM  ,    8,    13,   557,   559,     0,     0
6222, BEAM  ,    8,    13,   558,   560,     0,     0
```

```
*GROUP    ; Group
; NAME, NODE_LIST, ELEM_LIST, PLANE_TYPE
   Midas     , , , 0
   SPUTTANATI, , , 0
   P2-P3 CA  , , , 0
   Linee sezione (D), , , 0

*BNDR-GROUP    ; Boundary Group
; NAME, AUTOTYPE
 fasce, 0
 pilastrini, 0

*MATERIAL    ; Material
; iMAT, TYPE, MNAME, SPHEAT, HEATCO, PLAST, TUNIT, bMASS, DAMPRATIO, [DATA1]
 ; STEEL, CONC, ALUMINUM, USER
; iMAT, TYPE, MNAME, SPHEAT, HEATCO, PLAST, TUNIT, bMASS, DAMPRATIO, [DATA2], [DATA2]
 ; SRC
; [DATA1] : 1, STANDARD, CODE/PRODUCT, DB, USEELAST, ELAST
; [DATA1] : 2, ELAST, POISN, THERMAL, DEN, MASS
; [DATA1] : 3, Ex, Ey, Ez, Tx, Ty, Tz, Sxy, Sxz, Syz, Pxy, Pxz, Pyz, DEN, MASS
 ; Orthotropic
; [DATA2] : 1, STANDARD, CODE/PRODUCT, DB, USEELAST, ELAST or 2, ELAST, POISN, THERMAL
, DEN, MASS
    1, USER , MA                , 0, 0, , C, NO, 0.05, 2, 1.5000e+006,  0.45, 0.0000e+
000,    18,     0
    2, USER , MA rigid          , 0, 0, , C, NO, 0.05, 2, 1.5000e+008,  0.45, 0.0000e+
000,     9,     0
    3, USER , MB                , 0, 0, , C, NO, 0.05, 2, 4.5000e+006,  0.45, 0.0000e+
000,    12,     0
    4, USER , MB rigid          , 0, 0, , C, NO, 0.05, 2, 4.5000e+008,  0.45, 0.0000e+
000,     6,     0
    5, USER , C16/20rigid       , 0, 0, , C, NO, 0, 2, 2.8607e+009,   0.2, 0.0000e+000
,    25,     0
    6, CONC , C16/20            , 0, 0, , C, NO, 0.05, 1, EN04(RC)   ,            , C1
6/20        , NO, 2.8607e+007
    7, USER , MA int            , 0, 0, , C, NO, 0.05, 2, 2.2500e+006,  0.45, 0.0000e+
000, 19.96,     0
    8, CONC , C25/30            , 0, 0, , C, NO, 0.05, 1, EN04(RC)   ,            , C2
5/30        , NO, 3.1475e+007

*MATL-COLOR
; iMAT, W_R, W_G, W_B, HF_R, HF_G, HF_B, HE_R, HE_G, HE_B, bBLEND, FACT
    1,   0,   0,   0,  255, 128,   0,    0,   0,   0,  NO, 0.5
    2,   0,   0,   0,  255, 128, 128,    0,   0,   0,  NO, 0.5
    3,   0,   0,   0,    0, 128,   0,    0,   0,   0,  NO, 0.5
    4,   0,   0,   0,    0, 206, 103,    0,   0,   0,  NO, 0.5
    5, 128,   0, 128,  255,   0,   0,    0, 255,   0,  NO, 0.5
    6,   0,   0,   0,  192, 192, 192,    0,   0,   0,  NO, 0.5
    7, 128,   0, 128,  255,   0,   0,    0, 255,   0,  NO, 0.5
    8,   0,   0,   0,  128, 128, 128,    0,   0,   0,  NO, 0.5


*SECTION    ; Section
; iSEC, TYPE, SNAME, [OFFSET], bSD, bWE, SHAPE, [DATA1], [DATA2]                    ;
1st line - DB/USER
; iSEC, TYPE, SNAME, [OFFSET], bSD, bWE, SHAPE, BLT, D1, ..., D8, iCEL              ;
1st line - VALUE
;       AREA, ASy, ASz, Ixx, Iyy, Izz                                               ;
2nd line
;       CyP, CyM, CzP, CzM, QyB, QzB, PERI_OUT, PERI_IN, Cy, Cz                     ;
3rd line
;       Y1, Y2, Y3, Y4, Z1, Z2, Z3, Z4, Zyy, Zzz                                    ;
```

```
4th line
; iSEC, TYPE, SNAME, [OFFSET], bSD, bWE, SHAPE, ELAST, DEN, POIS, POIC, SF, THERMAL ;
1st line - SRC
;       D1, D2, [SRC]                                                               ;
2nd line
; iSEC, TYPE, SNAME, [OFFSET], bSD, bWE, SHAPE, 1, DB, NAME1, NAME2, D1, D2         ;
1st line - COMBINED
; iSEC, TYPE, SNAME, [OFFSET], bSD, bWE, SHAPE, 2, D11, D12, D13, D14, D15, D21, D22,
D23, D24
; iSEC, TYPE, SNAME, [OFFSET2], bSD, bWE, SHAPE, iyVAR, izVAR, STYPE                ;
1st line - TAPERED
;       DB, NAME1, NAME2                                                            ;
2nd line(STYPE=DB)
;       [DIM1], [DIM2]                                                              ;
2nd line(STYPE=USER)
;       D11, D12, D13, D14, D15, D16, D17, D18                                      ;
2nd line(STYPE=VALUE)
;       AREA1, ASy1, ASz1, Ixx1, Iyy1, Izz1                                         ;
3rd line(STYPE=VALUE)
;       CyP1, CyM1, CzP1, CzM1, QyB1, QzB1, PERI_OUT1, PERI_IN1, Cy1, Cz1           ;
4th line(STYPE=VALUE)
;       Y11, Y12, Y13, Y14, Z11, Z12, Z13, Z14, Zyy1, Zyy2                          ;
5th line(STYPE=VALUE)
;       D21, D22, D23, D24, D25, D26, D27, D28                                      ;
6th line(STYPE=VALUE)
;       AREA2, ASy2, ASz2, Ixx2, Iyy2, Izz2                                         ;
7th line(STYPE=VALUE)
;       CyP2, CyM2, CzP2, CzM2, QyB2, QzB2, PERI_OUT2, PERI_IN2, Cy2, Cz2           ;
8th line(STYPE=VALUE)
;       Y21, Y22, Y23, Y24, Z21, Z22, Z23, Z24, Zyy2, Zzz2                          ;
9th line(STYPE=VALUE)
; iSEC, TYPE, SNAME, [OFFSET], bSD, bWE, SHAPE                                      ;
1st line - COMPOSITE-B
;       Hw, tw, B1, Bf1, tf1, B2, Bf2, tf2                                          ;
2nd line
;       [SHAPE-NUM], [STIFF-SHAPE], [STIFF-POS] (1~4)                               ;
3rd line
;       SW, GN, CTC, Bc, Tc, Hh, EsEc, DsDc, Ps, Pc, TsTc, bMulti, Elong, Esh       ;
4th line
; iSEC, TYPE, SNAME, [OFFSET], bSD, bWE, SHAPE                                      ;
1st line - COMPOSITE-I
;       Hw, tw, B1, tf1, B2, tf2                                                    ;
2nd line
;       [SHAPE-NUM], [STIFF-SHAPE], [STIFF-POS] (1~2)                               ;
3rd line
;       SW, GN, CTC, Bc, Tc, Hh, EsEc, DsDc, Ps, Pc, TsTc, bMulti, Elong, Esh       ;
4th line
; iSEC, TYPE, SNAME, [OFFSET], bSD, bWE, SHAPE                                      ;
1st line - COMPOSITE-TUB
;       Hw, tw, B1, Bf1, tf1, B2, Bf2, tf2, Bf3, tfp                                ;
2nd line
;       [SHAPE-NUM], [STIFF-SHAPE], [STIFF-POS] (1~3)                               ;
3rd line
;       SW, GN, CTC, Bc, Tc, Hh, EsEc, DsDc, Ps, Pc, TsTc, bMulti, Elong, Esh       ;
4th line
; [DATA1] : 1, DB, NAME or 2, D1, D2, D3, D4, D5, D6, D7, D8, D9, D10
; [DATA2] : CCSHAPE or iCEL or iN1, iN2
; [SRC]  : 1, DB, NAME1, NAME2 or 2, D1, D2, D3, D4, D5, D6, D7, D8, D9, D10, iN1, iN2
; [DIM1], [DIM2] : D1, D2, D3, D4, D5, D6, D7, D8
; [OFFSET] : OFFSET, iCENT, iREF, iHORZ, HUSER, iVERT, VUSER
; [OFFSET2]: OFFSET, iCENT, iREF, iHORZ, HUSERI, HUSERJ, iVERT, VUSERI, VUSERJ
; [SHAPE-NUM]: SHAPE-NUM, POS, STIFF-NUM1, STIFF-NUM2, STIFF-NUM3, STIFF-NUM4
```

```
; [STIFF-SHAPE]: SHAPE-NUM, for(SHAPE-NUM) { NAME, SIZE1~8 }
; [STIFF-POS]: STIFF-NUM, for(STIFF-NUM) { SPACING, iSHAPE, bCALC }
    1, DBUSER    , L0_X1            , CC, 0, 0, 0, 0, 0, 0, YES, NO, SB , 2, 1.93, 0.
36, 0, 0, 0, 0, 0, 0, 0, 0
    2, DBUSER    , L0_X2            , CC, 0, 0, 0, 0, 0, 0, YES, NO, SB , 2, 0.65, 0.
36, 0, 0, 0, 0, 0, 0, 0, 0
    3, DBUSER    , L0_X2bis         , CC, 0, 0, 0, 0, 0, 0, YES, NO, SB , 2, 1.225, 0
.36, 0, 0, 0, 0, 0, 0, 0, 0
    4, DBUSER    , L0_X3            , CC, 0, 0, 0, 0, 0, 0, YES, NO, SB , 2, 1.83, 0.
36, 0, 0, 0, 0, 0, 0, 0, 0
    5, DBUSER    , L0_X4            , CC, 0, 0, 0, 0, 0, 0, YES, NO, SB , 2, 1.25, 0.
36, 0, 0, 0, 0, 0, 0, 0, 0
    6, DBUSER    , L0_X5            , CC, 0, 0, 0, 0, 0, 0, YES, NO, SB , 2, 0.47, 0.
36, 0, 0, 0, 0, 0, 0, 0, 0
    7, DBUSER    , L0_X6            , CC, 0, 0, 0, 0, 0, 0, YES, NO, SB , 2, 4.68, 0.
25, 0, 0, 0, 0, 0, 0, 0, 0
    8, DBUSER    , L0_X7            , CC, 0, 0, 0, 0, 0, 0, YES, NO, SB , 2, 1.53, 0.
25, 0, 0, 0, 0, 0, 0, 0, 0
    9, DBUSER    , L0_X8            , CC, 0, 0, 0, 0, 0, 0, YES, NO, SB , 2, 1.75, 0.
25, 0, 0, 0, 0, 0, 0, 0, 0
   10, DBUSER    , L0_X9            , CC, 0, 0, 0, 0, 0, 0, YES, NO, SB , 2, 1.33, 0.
25, 0, 0, 0, 0, 0, 0, 0, 0
   11, DBUSER    , L0_X10           , CC, 0, 0, 0, 0, 0, 0, YES, NO, SB , 2, 1.88, 0.
36, 0, 0, 0, 0, 0, 0, 0, 0
   12, DBUSER    , L0_X11           , CC, 0, 0, 0, 0, 0, 0, YES, NO, SB , 2, 2.95, 0.
36, 0, 0, 0, 0, 0, 0, 0, 0
   13, DBUSER    , Setti            , CC, 0, 0, 0, 0, 0, 0, YES, NO, SB , 2, 1.4, 0.2
5, 0, 0, 0, 0, 0, 0, 0, 0
   14, DBUSER    , L0_X13           , CC, 0, 0, 0, 0, 0, 0, YES, NO, SB , 2, 0.75, 0.
25, 0, 0, 0, 0, 0, 0, 0, 0
   15, DBUSER    , L0_X14           , CC, 0, 0, 0, 0, 0, 0, YES, NO, SB , 2, 4.47, 0.
25, 0, 0, 0, 0, 0, 0, 0, 0
   16, DBUSER    , L0_X15           , CC, 0, 0, 0, 0, 0, 0, YES, NO, SB , 2, 4.83, 0.
25, 0, 0, 0, 0, 0, 0, 0, 0
   17, DBUSER    , L0_X16           , CC, 0, 0, 0, 0, 0, 0, YES, NO, SB , 2, 0.3, 0.3
6, 0, 0, 0, 0, 0, 0, 0, 0
   18, DBUSER    , L0_X17           , CC, 0, 0, 0, 0, 0, 0, YES, NO, SB , 2, 0.5, 0.3
6, 0, 0, 0, 0, 0, 0, 0, 0
   19, DBUSER    , L0_X18           , CC, 0, 0, 0, 0, 0, 0, YES, NO, SB , 2, 0.65, 0.
36, 0, 0, 0, 0, 0, 0, 0, 0
   22, DBUSER    , L0_X21           , CC, 0, 0, 0, 0, 0, 0, YES, NO, SB , 2, 3.68, 0.
25, 0, 0, 0, 0, 0, 0, 0, 0
   23, DBUSER    , L0_X22           , CC, 0, 0, 0, 0, 0, 0, YES, NO, SB , 2, 1.6, 0.2
5, 0, 0, 0, 0, 0, 0, 0, 0
   24, DBUSER    , L0_X23           , CC, 0, 0, 0, 0, 0, 0, YES, NO, SB , 2, 3.77, 0.
25, 0, 0, 0, 0, 0, 0, 0, 0
   25, DBUSER    , L0_X24           , CC, 0, 0, 0, 0, 0, 0, YES, NO, SB , 2, 0.95, 0.
25, 0, 0, 0, 0, 0, 0, 0, 0
   26, DBUSER    , L0_X25           , CC, 0, 0, 0, 0, 0, 0, YES, NO, SB , 2, 6.45, 0.
25, 0, 0, 0, 0, 0, 0, 0, 0
   27, DBUSER    , L0_X26           , CC, 0, 0, 0, 0, 0, 0, YES, NO, SB , 2, 4.83, 0.
25, 0, 0, 0, 0, 0, 0, 0, 0
   28, DBUSER    , L0_X27           , CC, 0, 0, 0, 0, 0, 0, YES, NO, SB , 2, 0.97, 0.
36, 0, 0, 0, 0, 0, 0, 0, 0
   29, DBUSER    , L0_X28           , CC, 0, 0, 0, 0, 0, 0, YES, NO, SB , 2, 1.19, 0.
36, 0, 0, 0, 0, 0, 0, 0, 0
   30, DBUSER    , L0_X29           , CC, 0, 0, 0, 0, 0, 0, YES, NO, SB , 2, 1, 0.36,
 0, 0, 0, 0, 0, 0, 0, 0
   31, DBUSER    , L0_X30           , CC, 0, 0, 0, 0, 0, 0, YES, NO, SB , 2, 0.29, 0.
36, 0, 0, 0, 0, 0, 0, 0, 0
   32, DBUSER    , L0_X31           , CC, 0, 0, 0, 0, 0, 0, YES, NO, SB , 2, 0.19, 0.
36, 0, 0, 0, 0, 0, 0, 0, 0
```

```
   33, DBUSER    , L0_X32            , CC, 0, 0, 0, 0, 0, 0, YES, NO, SB , 2, 0.29, 0.
36, 0, 0, 0, 0, 0, 0, 0, 0
   34, DBUSER    , L0_X33            , CC, 0, 0, 0, 0, 0, 0, YES, NO, SB , 2, 1.29, 0.
36, 0, 0, 0, 0, 0, 0, 0, 0
   35, DBUSER    , L0_X33bis         , CC, 0, 0, 0, 0, 0, 0, YES, NO, SB , 2, 0.95, 0.
36, 0, 0, 0, 0, 0, 0, 0, 0
   36, DBUSER    , L0_X34            , CC, 0, 0, 0, 0, 0, 0, YES, NO, SB , 2, 1.55, 0.
36, 0, 0, 0, 0, 0, 0, 0, 0
   37, DBUSER    , L0_X35            , CC, 0, 0, 0, 0, 0, 0, YES, NO, SB , 2, 6.35, 0.
36, 0, 0, 0, 0, 0, 0, 0, 0
   38, DBUSER    , L0_X22bis         , CC, 0, 0, 0, 0, 0, 0, YES, NO, SB , 2, 1.28, 0.
25, 0, 0, 0, 0, 0, 0, 0, 0
  100, DBUSER    , L0_Y01            , CC, 0, 0, 0, 0, 0, 0, YES, NO, SB , 2, 7.4, 0.5
, 0, 0, 0, 0, 0, 0, 0, 0
  101, DBUSER    , L0_Y02            , CC, 0, 0, 0, 0, 0, 0, YES, NO, SB , 2, 1.62, 0.
25, 0, 0, 0, 0, 0, 0, 0, 0
  102, DBUSER    , L0_Y02bis         , CC, 0, 0, 0, 0, 0, 0, YES, NO, SB , 2, 2.18, 0.
25, 0, 0, 0, 0, 0, 0, 0, 0
  103, DBUSER    , L0_Y02tris        , CC, 0, 0, 0, 0, 0, 0, YES, NO, SB , 2, 3.55, 0.
25, 0, 0, 0, 0, 0, 0, 0, 0
  104, DBUSER    , L0_Y03            , CC, 0, 0, 0, 0, 0, 0, YES, NO, SB , 2, 1.54, 0.
36, 0, 0, 0, 0, 0, 0, 0, 0
  105, DBUSER    , L0_Y04            , CC, 0, 0, 0, 0, 0, 0, YES, NO, SB , 2, 1.2, 0.3
6, 0, 0, 0, 0, 0, 0, 0, 0
  106, DBUSER    , L0_Y04bis         , CC, 0, 0, 0, 0, 0, 0, YES, NO, SB , 2, 0.59, 0.
36, 0, 0, 0, 0, 0, 0, 0, 0
  107, DBUSER    , L0_Y05            , CC, 0, 0, 0, 0, 0, 0, YES, NO, SB , 2, 1.25, 0.
25, 0, 0, 0, 0, 0, 0, 0, 0
  108, DBUSER    , L0_Y06            , CC, 0, 0, 0, 0, 0, 0, YES, NO, SB , 2, 1.15, 0.
36, 0, 0, 0, 0, 0, 0, 0, 0
  109, DBUSER    , L0_Y07            , CC, 0, 0, 0, 0, 0, 0, YES, NO, SB , 2, 1.18, 0.
25, 0, 0, 0, 0, 0, 0, 0, 0
  110, DBUSER    , L0_Y08            , CC, 0, 0, 0, 0, 0, 0, YES, NO, SB , 2, 2.75, 0.
36, 0, 0, 0, 0, 0, 0, 0, 0
  111, DBUSER    , L0 Y09            , CC, 0, 0, 0, 0, 0, 0, YES, NO, SB , 2, 6.43, 0.
25, 0, 0, 0, 0, 0, 0, 0, 0
  112, DBUSER    , L0_Y10            , CC, 0, 0, 0, 0, 0, 0, YES, NO, SB , 2, 6.43, 0.
25, 0, 0, 0, 0, 0, 0, 0, 0
  113, DBUSER    , L0_Y11            , CC, 0, 0, 0, 0, 0, 0, YES, NO, SB , 2, 6.43, 0.
36, 0, 0, 0, 0, 0, 0, 0, 0
  114, DBUSER    , L0 Y12            , CC, 0, 0, 0, 0, 0, 0, YES, NO, SB , 2, 0.84, 0.
36, 0, 0, 0, 0, 0, 0, 0, 0
  115, DBUSER    , L0_Y13            , CC, 0, 0, 0, 0, 0, 0, YES, NO, SB , 2, 0.83, 0.
25, 0, 0, 0, 0, 0, 0, 0, 0
  116, DBUSER    , L0_Y14            , CC, 0, 0, 0, 0, 0, 0, YES, NO, SB , 2, 2.55, 0.
36, 0, 0, 0, 0, 0, 0, 0, 0
  117, DBUSER    , L0_Y14bis         , CC, 0, 0, 0, 0, 0, 0, YES, NO, SB , 2, 4.11, 0.
25, 0, 0, 0, 0, 0, 0, 0, 0
  118, DBUSER    , L0_Y15            , CC, 0, 0, 0, 0, 0, 0, YES, NO, SB , 2, 1.37, 0.
36, 0, 0, 0, 0, 0, 0, 0, 0
  119, DBUSER    , L0_Y16            , CC, 0, 0, 0, 0, 0, 0, YES, NO, SB , 2, 5.61, 0.
36, 0, 0, 0, 0, 0, 0, 0, 0
  120, DBUSER    , L0_Y17            , CC, 0, 0, 0, 0, 0, 0, YES, NO, SB , 2, 4.69, 0.
25, 0, 0, 0, 0, 0, 0, 0, 0
  121, DBUSER    , L0_Y17bis         , CC, 0, 0, 0, 0, 0, 0, YES, NO, SB , 2, 1.35, 0.
25, 0, 0, 0, 0, 0, 0, 0, 0
  122, DBUSER    , L0_Y18            , CC, 0, 0, 0, 0, 0, 0, YES, NO, SB , 2, 1.79, 0.
36, 0, 0, 0, 0, 0, 0, 0, 0
  700, DBUSER    , Pilastro fitt     , CC, 0, 0, 0, 0, 0, 0, YES, NO, SB , 2, 0.248, 0
.248, 0, 0, 0, 0, 0, 0, 0, 0
  701, DBUSER    , cordolo 40x21     , CC, 0, 0, 0, 0, 0, 0, YES, NO, SB , 2, 0.21, 0.
4, 0, 0, 0, 0, 0, 0, 0, 0
```

```
  702, DBUSER    , cordolo 30x21     , CC, 0, 0, 0, 0, 0, 0, YES, NO, SB , 2, 0.21, 0.
3, 0, 0, 0, 0, 0, 0, 0, 0
  703, DBUSER    , cordolo RIGID     , CC, 0, 0, 0, 0, 0, 0, YES, NO, SB , 2, 0.2, 0.4
, 0, 0, 0, 0, 0, 0, 0, 0
  704, DBUSER    , cordolo fitt      , CC, 0, 0, 0, 0, 0, 0, YES, NO, SB , 2, 0.21, 0.
3, 0, 0, 0, 0, 0, 0, 0, 0
  707, DBUSER    , Pilastro 50x25    , CC, 0, 0, 0, 0, 0, 0, YES, NO, SB , 2, 0.5, 0.2
5, 0, 0, 0, 0, 0, 0, 0, 0
  708, DBUSER    , Trave             , CC, 0, 0, 0, 0, 0, 0, YES, NO, SB , 2, 0.25, 0.
55, 0, 0, 0, 0, 0, 0, 0, 0
  709, DBUSER    , Fascia 0.60x0.36  , CC, 0, 0, 0, 0, 0, 0, YES, NO, SB , 2, 0.6, 0.3
6, 0, 0, 0, 0, 0, 0, 0, 0
  710, DBUSER    , Fascia 1.45x0.25  , CC, 0, 0, 0, 0, 0, 0, YES, NO, SB , 2, 1.45, 0.
25, 0, 0, 0, 0, 0, 0, 0, 0
  711, DBUSER    , Fascia 0.95x0.25  , CC, 0, 0, 0, 0, 0, 0, YES, NO, SB , 2, 0.95, 0.
25, 0, 0, 0, 0, 0, 0, 0, 0
  712, DBUSER    , Fascia 0.45x0.36  , CC, 0, 0, 0, 0, 0, 0, YES, NO, SB , 2, 0.45, 0.
36, 0, 0, 0, 0, 0, 0, 0, 0
 1000, DBUSER    , LINE              , CC, 0, 0, 0, 0, 0, 0, YES, NO, SB , 2, 0.01, 0.
01, 0, 0, 0, 0, 0, 0, 0, 0

*SECT-COLOR
; iSEC, W_R, W_G, W_B, HF_R, HF_G, HF_B, HE_R, HE_G, HE_B, bBLEND, FACT
    1, 128,   0, 128,  255,   0,   0,    0, 255,   0,  NO, 0.5
    2, 128,   0, 128,  255,   0,   0,    0, 255,   0,  NO, 0.5
    3, 128,   0, 128,  255,   0,   0,    0, 255,   0,  NO, 0.5
    4, 128,   0, 128,  255,   0,   0,    0, 255,   0,  NO, 0.5
    5, 128,   0, 128,  255,   0,   0,    0, 255,   0,  NO, 0.5
    6, 128,   0, 128,  255,   0,   0,    0, 255,   0,  NO, 0.5
    7, 128,   0, 128,  255,   0,   0,    0, 255,   0,  NO, 0.5
    8, 128,   0, 128,  255,   0,   0,    0, 255,   0,  NO, 0.5
    9, 128,   0, 128,  255,   0,   0,    0, 255,   0,  NO, 0.5
   10, 128,   0, 128,  255,   0,   0,    0, 255,   0,  NO, 0.5
   11, 128,   0, 128,  255,   0,   0,    0, 255,   0,  NO, 0.5
   12, 128,   0, 128,  255,   0,   0,    0, 255,   0,  NO, 0.5
   13, 128,   0, 128,  255,   0,   0,    0, 255,   0,  NO, 0.5
   14, 128,   0, 128,  255,   0,   0,    0, 255,   0,  NO, 0.5
   15, 128,   0, 128,  255,   0,   0,    0, 255,   0,  NO, 0.5
   16, 128,   0, 128,  255,   0,   0,    0, 255,   0,  NO, 0.5
   17, 128,   0, 128,  255,   0,   0,    0, 255,   0,  NO, 0.5
   18, 128,   0, 128,  255,   0,   0,    0, 255,   0,  NO, 0.5
   19, 128,   0, 128,  255,   0,   0,    0, 255,   0,  NO, 0.5
   22, 128,   0, 128,  255,   0,   0,    0, 255,   0,  NO, 0.5
   23, 128,   0, 128,  255,   0,   0,    0, 255,   0,  NO, 0.5
   24, 128,   0, 128,  255,   0,   0,    0, 255,   0,  NO, 0.5
   25, 128,   0, 128,  255,   0,   0,    0, 255,   0,  NO, 0.5
   26, 128,   0, 128,  255,   0,   0,    0, 255,   0,  NO, 0.5
   27, 128,   0, 128,  255,   0,   0,    0, 255,   0,  NO, 0.5
   28, 128,   0, 128,  255,   0,   0,    0, 255,   0,  NO, 0.5
   29, 128,   0, 128,  255,   0,   0,    0, 255,   0,  NO, 0.5
   30, 128,   0, 128,  255,   0,   0,    0, 255,   0,  NO, 0.5
   31, 128,   0, 128,  255,   0,   0,    0, 255,   0,  NO, 0.5
   32, 128,   0, 128,  255,   0,   0,    0, 255,   0,  NO, 0.5
   33, 128,   0, 128,  255,   0,   0,    0, 255,   0,  NO, 0.5
   34, 128,   0, 128,  255,   0,   0,    0, 255,   0,  NO, 0.5
   35, 128,   0, 128,  255,   0,   0,    0, 255,   0,  NO, 0.5
   36, 128,   0, 128,  255,   0,   0,    0, 255,   0,  NO, 0.5
   37, 128,   0, 128,  255,   0,   0,    0, 255,   0,  NO, 0.5
   38, 128,   0, 128,  255,   0,   0,    0, 255,   0,  NO, 0.5
  100, 128,   0, 128,  255,   0,   0,    0, 255,   0,  NO, 0.5
  101, 128,   0, 128,  255,   0,   0,    0, 255,   0,  NO, 0.5
  102, 128,   0, 128,  255,   0,   0,    0, 255,   0,  NO, 0.5
```

```
  103, 128,   0, 128,  255,   0,   0,    0, 255,   0,  NO, 0.5
  104, 128,   0, 128,  255,   0,   0,    0, 255,   0,  NO, 0.5
  105, 128,   0, 128,  255,   0,   0,    0, 255,   0,  NO, 0.5
  106, 128,   0, 128,  255,   0,   0,    0, 255,   0,  NO, 0.5
  107, 128,   0, 128,  255,   0,   0,    0, 255,   0,  NO, 0.5
  108, 128,   0, 128,  255,   0,   0,    0, 255,   0,  NO, 0.5
  109, 128,   0, 128,  255,   0,   0,    0, 255,   0,  NO, 0.5
  110, 128,   0, 128,  255,   0,   0,    0, 255,   0,  NO, 0.5
  111, 128,   0, 128,  255,   0,   0,    0, 255,   0,  NO, 0.5
  112, 128,   0, 128,  255,   0,   0,    0, 255,   0,  NO, 0.5
  113, 128,   0, 128,  255,   0,   0,    0, 255,   0,  NO, 0.5
  114, 128,   0, 128,  255,   0,   0,    0, 255,   0,  NO, 0.5
  115, 128,   0, 128,  255,   0,   0,    0, 255,   0,  NO, 0.5
  116, 128,   0, 128,  255,   0,   0,    0, 255,   0,  NO, 0.5
  117, 128,   0, 128,  255,   0,   0,    0, 255,   0,  NO, 0.5
  118, 128,   0, 128,  255,   0,   0,    0, 255,   0,  NO, 0.5
  119, 128,   0, 128,  255,   0,   0,    0, 255,   0,  NO, 0.5
  120, 128,   0, 128,  255,   0,   0,    0, 255,   0,  NO, 0.5
  121, 128,   0, 128,  255,   0,   0,    0, 255,   0,  NO, 0.5
  122, 128,   0, 128,  255,   0,   0,    0, 255,   0,  NO, 0.5
  700, 128,   0, 128,  255,   0,   0,    0, 255,   0,  NO, 0.5
  701, 128,   0, 128,  255,   0,   0,    0, 255,   0,  NO, 0.5
  702, 128,   0, 128,  255,   0,   0,    0, 255,   0,  NO, 0.5
  703, 128,   0, 128,  255,   0,   0,    0, 255,   0,  NO, 0.5
  704, 128,   0, 128,  255,   0,   0,    0, 255,   0,  NO, 0.5
  707, 128,   0, 128,  255,   0,   0,    0, 255,   0,  NO, 0.5
  708, 128,   0, 128,  255,   0,   0,    0, 255,   0,  NO, 0.5
  709, 128,   0, 128,  255,   0,   0,    0, 255,   0,  NO, 0.5
  710, 128,   0, 128,  255,   0,   0,    0, 255,   0,  NO, 0.5
  711, 128,   0, 128,  255,   0,   0,    0, 255,   0,  NO, 0.5
  712, 128,   0, 128,  255,   0,   0,    0, 255,   0,  NO, 0.5
 1000, 128,   0, 128,  255,   0,   0,    0, 255,   0,  NO, 0.5

*SECT-SCALE    ; Section Stiffness Scale Factor
; iSEC, AREA SF, ASY SF, ASZ SF, IXX_SF, IYY_SF, IZZ_SF, WGT_SF, GROUP, iPart ; line 1
  700, 1, 1, 1, 1, 1, 1, 0.001, , 1
  703, 1, 100, 100, 1, 100, 100, 1, , 1
  704, 1, 1, 1, 1, 1, 1, 0.001, , 1

*DGN-SECT
; iSEC, TYPE, SNAME, [OFFSET], bSD, bWE, SHAPE, [DATA1], [DATA2]                    ;
1st line - DB/USER
; iSEC, TYPE, SNAME, [OFFSET], bSD, bWE, SHAPE, BLT, D1, ..., D8, iCEL               ;
1st line - VALUE
;       AREA, ASy, ASz, Ixx, Iyy, Izz                                                ;
2nd line
;       CyP, CyM, CzP, CzM, QyB, QzB, PERI_OUT, PERI_IN, Cy, Cz                      ;
3rd line
;       Y1, Y2, Y3, Y4, Z1, Z2, Z3, Z4, Zyy, Zzz                                     ;
4th line
; iSEC, TYPE, SNAME, [OFFSET], bSD, bWE, SHAPE, ELAST, DEN, POIS, POIC, SF, THERMAL ;
1st line - SRC
;       D1, D2, [SRC]                                                                ;
2nd line
; iSEC, TYPE, SNAME, [OFFSET], bSD, bWE, SHAPE, 1, DB, NAME1, NAME2, D1, D2          ;
1st line - COMBINED
; iSEC, TYPE, SNAME, [OFFSET], bSD, bWE, SHAPE, 2, D11, D12, D13, D14, D15, D21, D22,
D23, D24
; iSEC, TYPE, SNAME, [OFFSET2], bSD, bWE, SHAPE, iyVAR, izVAR, STYPE                 ;
1st line - TAPERED
;       DB, NAME1, NAME2                                                             ;
2nd line(STYPE=DB)
```

```
;       [DIM1], [DIM2]                                                          ;
2nd line(STYPE=USER)
;       D11, D12, D13, D14, D15, D16, D17, D18                                  ;
2nd line(STYPE=VALUE)
;       AREA1, ASy1, ASz1, Ixx1, Iyy1, Izz1                                     ;
3rd line(STYPE=VALUE)
;       CyP1, CyM1, CzP1, CzM1, QyB1, QzB1, PERI_OUT1, PERI_IN1, Cy1, Cz1       ;
4th line(STYPE=VALUE)
;       Y11, Y12, Y13, Y14, Z11, Z12, Z13, Z14, Zyy1, Zyy2                      ;
5th line(STYPE=VALUE)
;       D21, D22, D23, D24, D25, D26, D27, D28                                  ;
6th line(STYPE=VALUE)
;       AREA2, ASy2, ASz2, Ixx2, Iyy2, Izz2                                     ;
7th line(STYPE=VALUE)
;       CyP2, CyM2, CzP2, CzM2, QyB2, QzB2, PERI_OUT2, PERI_IN2, Cy2, Cz2       ;
8th line(STYPE=VALUE)
;       Y21, Y22, Y23, Y24, Z21, Z22, Z23, Z24, Zyy2, Zzz2                      ;
9th line(STYPE=VALUE)
; iSEC, TYPE, SNAME, [OFFSET], bSD, bWE, SHAPE                                  ;
1st line - COMPOSITE-B
;       Hw, tw, B1, Bf1, tf1, B2, Bf2, tf2                                      ;
2nd line
;       [SHAPE-NUM], [STIFF-SHAPE], [STIFF-POS] (1~4)                           ;
3rd line
;       SW, GN, CTC, Bc, Tc, Hh, EsEc, DsDc, Ps, Pc, TsTc, bMulti, Elong, Esh   ;
4th line
; iSEC, TYPE, SNAME, [OFFSET], bSD, bWE, SHAPE                                  ;
1st line - COMPOSITE-I
;       Hw, tw, B1, tf1, B2, tf2                                                ;
2nd line
;       [SHAPE-NUM], [STIFF-SHAPE], [STIFF-POS] (1~2)                           ;
3rd line
;       SW, GN, CTC, Bc, Tc, Hh, EsEc, DsDc, Ps, Pc, TsTc, bMulti, Elong, Esh   ;
4th line
; iSEC, TYPE, SNAME, [OFFSET], bSD, bWE, SHAPE                                  ;
1st line - COMPOSITE-TUB
;       Hw, tw, B1, Bf1, tf1, B2, Bf2, tf2, Bf3, tfp                            ;
2nd line
;       [SHAPE-NUM], [STIFF-SHAPE], [STIFF-POS] (1~3)                           ;
3rd line
;       SW, GN, CTC, Bc, Tc, Hh, EsEc, DsDc, Ps, Pc, TsTc, bMulti, Elong, Esh   ;
4th line
; [DATA1] : 1, DB, NAME or 2, D1, D2, D3, D4, D5, D6, D7, D8, D9, D10
; [DATA2] : CCSHAPE or iCEL or iN1, iN2
; [SRC]  : 1, DB, NAME1, NAME2 or 2, D1, D2, D3, D4, D5, D6, D7, D8, D9, D10, iN1, iN2
; [DIM1], [DIM2] : D1, D2, D3, D4, D5, D6, D7, D8
; [OFFSET] : OFFSET, iCENT, iREF, iHORZ, HUSER, iVERT, VUSER
; [OFFSET2]: OFFSET, iCENT, iREF, iHORZ, HUSERI, HUSERJ, iVERT, VUSERI, VUSERJ
; [SHAPE-NUM]: SHAPE-NUM, POS, STIFF-NUM1, STIFF-NUM2, STIFF-NUM3, STIFF-NUM4
; [STIFF-SHAPE]: SHAPE-NUM, for(SHAPE-NUM) { NAME, SIZE1~8 }
; [STIFF-POS]: STIFF-NUM, for(STIFF-NUM) { SPACING, iSHAPE, bCALC }
    1, DBUSER    , L0_X1             , CC, 0, 0, 0, 0, 0, 0, YES, NO, SB , 2, 1.93, 0.
36, 0, 0, 0, 0, 0, 0, 0, 0
    2, DBUSER    , L0_X2             , CC, 0, 0, 0, 0, 0, 0, YES, NO, SB , 2, 0.65, 0.
36, 0, 0, 0, 0, 0, 0, 0, 0
    3, DBUSER    , L0_X2bis          , CC, 0, 0, 0, 0, 0, 0, YES, NO, SB , 2, 1.225, 0
.36, 0, 0, 0, 0, 0, 0, 0, 0
    4, DBUSER    , L0_X3             , CC, 0, 0, 0, 0, 0, 0, YES, NO, SB , 2, 1.83, 0.
36, 0, 0, 0, 0, 0, 0, 0, 0
    5, DBUSER    , L0_X4             , CC, 0, 0, 0, 0, 0, 0, YES, NO, SB , 2, 1.25, 0.
36, 0, 0, 0, 0, 0, 0, 0, 0
    6, DBUSER    , L0_X5             , CC, 0, 0, 0, 0, 0, 0, YES, NO, SB , 2, 0.47, 0.
```

```
36, 0, 0, 0, 0, 0, 0, 0, 0
    7, DBUSER    , L0_X6            , CC, 0, 0, 0, 0, 0, 0, YES, NO, SB , 2, 4.68, 0.
25, 0, 0, 0, 0, 0, 0, 0, 0
    8, DBUSER    , L0_X7            , CC, 0, 0, 0, 0, 0, 0, YES, NO, SB , 2, 1.53, 0.
25, 0, 0, 0, 0, 0, 0, 0, 0
    9, DBUSER    , L0_X8            , CC, 0, 0, 0, 0, 0, 0, YES, NO, SB , 2, 1.75, 0.
25, 0, 0, 0, 0, 0, 0, 0, 0
   10, DBUSER    , L0_X9            , CC, 0, 0, 0, 0, 0, 0, YES, NO, SB , 2, 1.33, 0.
25, 0, 0, 0, 0, 0, 0, 0, 0
   11, DBUSER    , L0_X10           , CC, 0, 0, 0, 0, 0, 0, YES, NO, SB , 2, 1.88, 0.
36, 0, 0, 0, 0, 0, 0, 0, 0
   12, DBUSER    , L0_X11           , CC, 0, 0, 0, 0, 0, 0, YES, NO, SB , 2, 2.95, 0.
36, 0, 0, 0, 0, 0, 0, 0, 0
   13, DBUSER    , Setti            , CC, 0, 0, 0, 0, 0, 0, YES, NO, SB , 2, 1.4, 0.2
5, 0, 0, 0, 0, 0, 0, 0, 0
   14, DBUSER    , L0_X13           , CC, 0, 0, 0, 0, 0, 0, YES, NO, SB , 2, 0.75, 0.
25, 0, 0, 0, 0, 0, 0, 0, 0
   15, DBUSER    , L0_X14           , CC, 0, 0, 0, 0, 0, 0, YES, NO, SB , 2, 4.47, 0.
25, 0, 0, 0, 0, 0, 0, 0, 0
   16, DBUSER    , L0_X15           , CC, 0, 0, 0, 0, 0, 0, YES, NO, SB , 2, 4.83, 0.
25, 0, 0, 0, 0, 0, 0, 0, 0
   17, DBUSER    , L0_X16           , CC, 0, 0, 0, 0, 0, 0, YES, NO, SB , 2, 0.3, 0.3
6, 0, 0, 0, 0, 0, 0, 0, 0
   18, DBUSER    , L0_X17           , CC, 0, 0, 0, 0, 0, 0, YES, NO, SB , 2, 0.5, 0.3
6, 0, 0, 0, 0, 0, 0, 0, 0
   19, DBUSER    , L0_X18           , CC, 0, 0, 0, 0, 0, 0, YES, NO, SB , 2, 0.65, 0.
36, 0, 0, 0, 0, 0, 0, 0, 0
   22, DBUSER    , L0_X21           , CC, 0, 0, 0, 0, 0, 0, YES, NO, SB , 2, 3.68, 0.
25, 0, 0, 0, 0, 0, 0, 0, 0
   23, DBUSER    , L0_X22           , CC, 0, 0, 0, 0, 0, 0, YES, NO, SB , 2, 1.6, 0.2
5, 0, 0, 0, 0, 0, 0, 0, 0
   24, DBUSER    , L0_X23           , CC, 0, 0, 0, 0, 0, 0, YES, NO, SB , 2, 3.77, 0.
25, 0, 0, 0, 0, 0, 0, 0, 0
   25, DBUSER    , L0_X24           , CC, 0, 0, 0, 0, 0, 0, YES, NO, SB , 2, 0.95, 0.
25, 0, 0, 0, 0, 0, 0, 0, 0
   26, DBUSER    , L0_X25           , CC, 0, 0, 0, 0, 0, 0, YES, NO, SB , 2, 6.45, 0.
25, 0, 0, 0, 0, 0, 0, 0, 0
   27, DBUSER    , L0_X26           , CC, 0, 0, 0, 0, 0, 0, YES, NO, SB , 2, 4.83, 0.
25, 0, 0, 0, 0, 0, 0, 0, 0
   28, DBUSER    , L0_X27           , CC, 0, 0, 0, 0, 0, 0, YES, NO, SB , 2, 0.97, 0.
36, 0, 0, 0, 0, 0, 0, 0, 0
   29, DBUSER    , L0_X28           , CC, 0, 0, 0, 0, 0, 0, YES, NO, SB , 2, 1.19, 0.
36, 0, 0, 0, 0, 0, 0, 0, 0
   30, DBUSER    , L0_X29           , CC, 0, 0, 0, 0, 0, 0, YES, NO, SB , 2, 1, 0.36,
 0, 0, 0, 0, 0, 0, 0, 0
   31, DBUSER    , L0_X30           , CC, 0, 0, 0, 0, 0, 0, YES, NO, SB , 2, 0.29, 0.
36, 0, 0, 0, 0, 0, 0, 0, 0
   32, DBUSER    , L0_X31           , CC, 0, 0, 0, 0, 0, 0, YES, NO, SB , 2, 0.19, 0.
36, 0, 0, 0, 0, 0, 0, 0, 0
   33, DBUSER    , L0_X32           , CC, 0, 0, 0, 0, 0, 0, YES, NO, SB , 2, 0.29, 0.
36, 0, 0, 0, 0, 0, 0, 0, 0
   34, DBUSER    , L0_X33           , CC, 0, 0, 0, 0, 0, 0, YES, NO, SB , 2, 1.29, 0.
36, 0, 0, 0, 0, 0, 0, 0, 0
   35, DBUSER    , L0_X33bis        , CC, 0, 0, 0, 0, 0, 0, YES, NO, SB , 2, 0.95, 0.
36, 0, 0, 0, 0, 0, 0, 0, 0
   36, DBUSER    , L0_X34           , CC, 0, 0, 0, 0, 0, 0, YES, NO, SB , 2, 1.55, 0.
36, 0, 0, 0, 0, 0, 0, 0, 0
   37, DBUSER    , L0_X35           , CC, 0, 0, 0, 0, 0, 0, YES, NO, SB , 2, 6.35, 0.
36, 0, 0, 0, 0, 0, 0, 0, 0
   38, DBUSER    , L0_X22bis        , CC, 0, 0, 0, 0, 0, 0, YES, NO, SB , 2, 1.28, 0.
25, 0, 0, 0, 0, 0, 0, 0, 0
  100, DBUSER    , L0_Y01           , CC, 0, 0, 0, 0, 0, 0, YES, NO, SB , 2, 7.4, 0.5
```

```
, 0, 0, 0, 0, 0, 0, 0, 0
  101, DBUSER    , L0_Y02           , CC, 0, 0, 0, 0, 0, 0, YES, NO, SB , 2, 1.62, 0.
25, 0, 0, 0, 0, 0, 0, 0, 0
  102, DBUSER    , L0_Y02bis        , CC, 0, 0, 0, 0, 0, 0, YES, NO, SB , 2, 2.18, 0.
25, 0, 0, 0, 0, 0, 0, 0, 0
  103, DBUSER    , L0_Y02tris       , CC, 0, 0, 0, 0, 0, 0, YES, NO, SB , 2, 3.55, 0.
25, 0, 0, 0, 0, 0, 0, 0, 0
  104, DBUSER    , L0_Y03           , CC, 0, 0, 0, 0, 0, 0, YES, NO, SB , 2, 1.54, 0.
36, 0, 0, 0, 0, 0, 0, 0, 0
  105, DBUSER    , L0_Y04           , CC, 0, 0, 0, 0, 0, 0, YES, NO, SB , 2, 1.2, 0.3
6, 0, 0, 0, 0, 0, 0, 0, 0
  106, DBUSER    , L0_Y04bis        , CC, 0, 0, 0, 0, 0, 0, YES, NO, SB , 2, 0.59, 0.
36, 0, 0, 0, 0, 0, 0, 0, 0
  107, DBUSER    , L0_Y05           , CC, 0, 0, 0, 0, 0, 0, YES, NO, SB , 2, 1.25, 0.
25, 0, 0, 0, 0, 0, 0, 0, 0
  108, DBUSER    , L0_Y06           , CC, 0, 0, 0, 0, 0, 0, YES, NO, SB , 2, 1.15, 0.
36, 0, 0, 0, 0, 0, 0, 0, 0
  109, DBUSER    , L0_Y07           , CC, 0, 0, 0, 0, 0, 0, YES, NO, SB , 2, 1.18, 0.
25, 0, 0, 0, 0, 0, 0, 0, 0
  110, DBUSER    , L0_Y08           , CC, 0, 0, 0, 0, 0, 0, YES, NO, SB , 2, 2.75, 0.
36, 0, 0, 0, 0, 0, 0, 0, 0
  111, DBUSER    , L0_Y09           , CC, 0, 0, 0, 0, 0, 0, YES, NO, SB , 2, 6.43, 0.
25, 0, 0, 0, 0, 0, 0, 0, 0
  112, DBUSER    , L0_Y10           , CC, 0, 0, 0, 0, 0, 0, YES, NO, SB , 2, 6.43, 0.
25, 0, 0, 0, 0, 0, 0, 0, 0
  113, DBUSER    , L0_Y11           , CC, 0, 0, 0, 0, 0, 0, YES, NO, SB , 2, 6.43, 0.
36, 0, 0, 0, 0, 0, 0, 0, 0
  114, DBUSER    , L0_Y12           , CC, 0, 0, 0, 0, 0, 0, YES, NO, SB , 2, 0.84, 0.
36, 0, 0, 0, 0, 0, 0, 0, 0
  115, DBUSER    , L0_Y13           , CC, 0, 0, 0, 0, 0, 0, YES, NO, SB , 2, 0.83, 0.
25, 0, 0, 0, 0, 0, 0, 0, 0
  116, DBUSER    , L0_Y14           , CC, 0, 0, 0, 0, 0, 0, YES, NO, SB , 2, 2.55, 0.
36, 0, 0, 0, 0, 0, 0, 0, 0
  117, DBUSER    , L0_Y14bis        , CC, 0, 0, 0, 0, 0, 0, YES, NO, SB , 2, 4.11, 0.
25, 0, 0, 0, 0, 0, 0, 0, 0
  118, DBUSER    , L0_Y15           , CC, 0, 0, 0, 0, 0, 0, YES, NO, SB , 2, 1.37, 0.
36, 0, 0, 0, 0, 0, 0, 0, 0
  119, DBUSER    , L0_Y16           , CC, 0, 0, 0, 0, 0, 0, YES, NO, SB , 2, 5.61, 0.
36, 0, 0, 0, 0, 0, 0, 0, 0
  120, DBUSER    , L0_Y17           , CC, 0, 0, 0, 0, 0, 0, YES, NO, SB , 2, 4.69, 0.
25, 0, 0, 0, 0, 0, 0, 0, 0
  121, DBUSER    , L0_Y17bis        , CC, 0, 0, 0, 0, 0, 0, YES, NO, SB , 2, 1.35, 0.
25, 0, 0, 0, 0, 0, 0, 0, 0
  122, DBUSER    , L0_Y18           , CC, 0, 0, 0, 0, 0, 0, YES, NO, SB , 2, 1.79, 0.
36, 0, 0, 0, 0, 0, 0, 0, 0
  700, DBUSER    , Pilastro fitt    , CC, 0, 0, 0, 0, 0, 0, YES, NO, SB , 2, 0.248, 0
.248, 0, 0, 0, 0, 0, 0, 0, 0
  701, DBUSER    , cordolo 40x21    , CC, 0, 0, 0, 0, 0, 0, YES, NO, SB , 2, 0.21, 0.
4, 0, 0, 0, 0, 0, 0, 0, 0
  702, DBUSER    , cordolo 30x21    , CC, 0, 0, 0, 0, 0, 0, YES, NO, SB , 2, 0.21, 0.
3, 0, 0, 0, 0, 0, 0, 0, 0
  703, DBUSER    , cordolo RIGID    , CC, 0, 0, 0, 0, 0, 0, YES, NO, SB , 2, 0.2, 0.4
, 0, 0, 0, 0, 0, 0, 0, 0
  704, DBUSER    , cordolo fitt     , CC, 0, 0, 0, 0, 0, 0, YES, NO, SB , 2, 0.21, 0.
3, 0, 0, 0, 0, 0, 0, 0, 0
  707, DBUSER    , Pilastro 50x25   , CC, 0, 0, 0, 0, 0, 0, YES, NO, SB , 2, 0.5, 0.2
5, 0, 0, 0, 0, 0, 0, 0, 0
  708, DBUSER    , Trave            , CC, 0, 0, 0, 0, 0, 0, YES, NO, SB , 2, 0.25, 0.
55, 0, 0, 0, 0, 0, 0, 0, 0
  709, DBUSER    , Fascia 0.60x0.36 , CC, 0, 0, 0, 0, 0, 0, YES, NO, SB , 2, 0.6, 0.3
6, 0, 0, 0, 0, 0, 0, 0, 0
  710, DBUSER    , Fascia 1.45x0.25 , CC, 0, 0, 0, 0, 0, 0, YES, NO, SB , 2, 1.45, 0.
```

```
25, 0, 0, 0, 0, 0, 0, 0, 0
  711, DBUSER    , Fascia 0.95x0.25  , CC, 0, 0, 0, 0, 0, 0, YES, NO, SB , 2, 0.95, 0.
25, 0, 0, 0, 0, 0, 0, 0, 0
  712, DBUSER    , Fascia 0.45x0.36  , CC, 0, 0, 0, 0, 0, 0, YES, NO, SB , 2, 0.45, 0.
36, 0, 0, 0, 0, 0, 0, 0, 0
 1000, DBUSER    , LINE              , CC, 0, 0, 0, 0, 0, 0, YES, NO, SB , 2, 0.01, 0.
01, 0, 0, 0, 0, 0, 0, 0, 0

*STLDCASE    ; Static Load Cases
; LCNAME, LCTYPE, DESC
   PP   , D ,
   G1+G2 copertura A, D ,
   G1+G2 copertura B, D ,
   Q sottotetto, L ,
   sporto gronda, D ,
   Q neve, L ,
   SISMA X, E ,
   SISMA Y, E ,
   travi, D ,
   parapetto, D ,
   muro , D ,


*STORY    ; Story
;  NAME=NAME, LEVEL, bFLDIAP, WINDWX, WINDWY, WINDCX, WINDCY, ECCX, ECCY, IECCX, IECCY
, TAFX, TAFY, WTAFX, WTAFY, AreaPosNum ; line 1
;       AreaPosX1, AreaPosY1, AreaPosZ1, ...
                                        ; from line 2
   NAME=1F, -1, NO , 2.4875, 0, 8.475, 6.55603, 0.8475, 0.655603, 0, 0, 1, 1, 2.5425,
1.96681, 0
   NAME=2F, -0.81, NO , 2.4875, 0, 9.05625, 12.951, 0.124375, 0, 0, 0, 1, 1, 0.373125,
 0, 0
   NAME=Roof, 3.35, YES, 16.95, 13.1121, 8.475, 6.55603, 0.8475, 0.655603, 0, 0, 1, 1,
 2.5425, 1.96681, 0

*STORY-CHANGED-INFO    ; Story Changed Information
; iCHANGEDINFO
 0

*STORY-ECCEN    ; Story Eccentricity
; bIncludeEccSeis, bIncludeEccWind, EccSeis, EccWind
 YES, YES, 5, 15

*DGN-CONC    ; Concrete Design Code
; CODE=CODE, RHOC, RHOR, RHOW, MRF, SHR-RATIO { , METHOD, A1, A2, A2_COLM, bSCWB }
 ; line 1
; [ACI318-89]     : bSPECIAL, PHI-B, PHI-T, PHIC1, PHI-C2, PHI-V
 ; line 2
; [ACI318-95]     : bSPECIAL, PHI-B, PHI-T, PHIC1, PHI-C2, PHI-V
 ; line 2
; [ACI318-99]     : bSPECIAL, PHI-B, PHI-T, PHIC1, PHI-C2, PHI-V
 ; line 2
; [ACI318-02]     : bSPECIAL, PHI-B, PHI-T, PHIC1, PHI-C2, PHI-V, TLF, SLF, TSLCB
 ; line 2
; [ACI318-05]     : bSPECIAL, PHI-B, PHI-T, PHIC1, PHI-C2, PHI-V, TLF, SLF, TSLCB
 ; line 2
; [ACI318-08]     : bSPECIAL, PHI-B, PHI-T, PHIC1, PHI-C2, PHI-V, TLF, SLF, TSLCB, SPW
ALL, BNDR-MTHD, CD, IE, FRMTYPE, 2NDGRUP, RHOS, bTOR, TRFT; line 2
; [ACI318-11]     : bCHEKCBEAM, bSPECIAL, PHI-B, PHI-T, PHIC1, PHI-C2, PHI-V, TLF, SLF
, TSLCB, SPWALL, BNDR-MTHD, CD, IE, FRMTYPE, 2NDGRUP, RHOS, bTOR, TRFT; line 2
; [ACI318-14]     : bCHEKCBEAM, bSPECIAL, PHI-B, PHI-T, PHIC1, PHI-C2, PHI-V, TLF, SLF
, TSLCB, SPWALL, BNDR-MTHD, CD, IE, FRMTYPE, 2NDGRUP, RHOS, bTOR, TRFT, bBC-JOINT; lin
```

```
e 2
; [ACI318M-14]     : bCHEKCBEAM, bSPECIAL, PHI-B, PHI-T, PHIC1, PHI-C2, PHI-V, TLF, SLF
, TSLCB, SPWALL, BNDR-MTHD, CD, IE, FRMTYPE, 2NDGRUP, RHOS, bTOR, TRFT, bBC-JOINT; lin
e 2
; [NSR-10]        : bCHEKCBEAM, bSPECIAL, PHI-B, PHI-T, PHIC1, PHI-C2, PHI-V, TLF, SLF
, TSLCB, SPWALL, BNDR-MTHD, CD, IE, FRMTYPE, 2NDGRUP, RHOS, bBC-JOINT; line 2
; [AIK-USD94]      : bSPECIAL, PHI-B, PHI-T, PHIC1, PHI-C2, PHI-V
 ; line 2
; [TWN-USD92]      : bSPECIAL, PHI-B, PHI-T, PHIC1, PHI-C2, PHI-V, bTOR, TRFT, SCWB
 ; line 2
; [TWN-USD100]     : bSPECIAL, PHI-B, PHI-T, PHIC1, PHI-C2, PHI-V, bTOR, TRFT, SCWB
 ; line 2
; [KCI-USD99]      : bSPECIAL, PHI-B, PHI-T, PHIC1, PHI-C2, PHI-V, TLF, SLF, TSLCB
 ; line 2
; [KCI-USD03]      : bSPECIAL, PHI-B, PHI-T, PHIC1, PHI-C2, PHI-V, TLF, SLF, TSLCB
 ; line 2
; [KCI-USD07]      : bSPECIAL, PHI-B, PHI-T, PHIC1, PHI-C2, PHI-V, TLF, SLF, TSLCB, SPW
ALL, BNDR-MTHD, CD, IE, FRMTYPE, 2NDGRUP, bTOR, TRFT; line 2
; [KCI-USD12]      : bSPECIAL, PHI-B, PHI-T, PHIC1, PHI-C2, PHI-V, TLF, SLF, TSLCB, SPW
ALL, BNDR-MTHD, CD, IE, EXPOSURE, FRMTYPE, 2NDGRUP, bTOR, TRFT; line 2
; [BS8110-97]      : GAMMA-MC, GAMMA-MS, GAMMA-MV
 ; line 2
; [EUROCODE2]      : GAMMA-CF, GAMMA-CA, GAMMA-SF, GAMMA-SA, iSCODE
 ; line 2
; [EUROCODE2:04]   : GAMMA-CF, GAMMA-CA, GAMMA-SF, GAMMA-SA, ALPHACC, iSCODE,
 ; line 2
;                    bRULE, WEAK-FACT, iDUC, GAMMA-RD-B, GAMMA-RD-C, S-GRUP
 ; line 2
;                    FRAMETYPE, AUA1, SPLCK, SOILFACTOR, TB, TC, TD, AGR, I, DAMPINGRAT
, BCJOINT, NTC2008, UF, GAMMA-RD-W, GAMMA-RD-J ; line 2
;                    STRUT-ANG, bBEHAVIOR-FACT, BEHAVIOR-FACT-VALUE, iNTC, bVCWALL, bVC
COLM, dPHIEF, bAUTOA, bAUTOC, A, B, C, bTOR    ; line 2
;                    bSHELL, dSHELLHORIZ, DSHELLVERT    ; line 2
; [EUROCODE2-2:05]: GAMMA-CF, GAMMA-CA, GAMMA-SF, GAMMA-SA, GAMMA_CL, GAMMA_SL, ALPHAC
C, iSCODE, STRUT-ANG,; line 2
;                    bSHELL, dSHELLHORIZ, DSHELLVERT    ; line 2
; [IS456:2000]     : bSPECIAL, GAMMA-C, GAMMA-S, FOS, SubRex
 ; line 2
; [GB50010-02]     : bSPECIAL, GAMMA-C, GAMMA-S, KIND, iSlabType
 ; line 2
; [GB50010-10]     : bSPECIAL, GAMMA-C, GAMMA-S, KIND, iSlabType, bTOR, TRFT
 ; line 2
; [CSA-A23.3-94]   : bSPECIAL, PHI-C, PHI-S, PHI-M
 ; line 2
; [AIK-WSD2K]      : bSPECIAL
 ; line 2
; [AIJ-WSD99]      : bSPECIAL, KIND
 ; line 2
; [AASHTO-LRFD12] : bSPECIAL, PHI-B, PHI-T, PHI-C1, PHI-C2, PHI-V, KIND
 ; line 2
; [AASHTO-LRFD02] : bSPECIAL, PHI-B, PHI-T, PHI-C1, PHI-C2, PHI-V, KIND
 ; line 2
; [AASHTO-LFD96]  : bSPECIAL, PHI-B, PHI-T, PHI-C1, PHI-C2, PHI-V
 ; line 2
; [KSCE-USD05]     : bSPECIAL, PHI-B, PHI-T, PHI-C1, PHI-C2, PHI-V
 ; line 2
; [KSCE-USD96]     : bSPECIAL, PHI-B, PHI-T, PHI-C1, PHI-C2, PHI-V
 ; line 2
; [KSCE-RAIL-USE04] : bSPECIAL, PHI-B, PHI-T, PHI-C1, PHI-C2, PHI-V
 ; line 2
; [TWN-BRG-LSD90] : bSPECIAL, PHI-B, PHI-T, PHI-C1, PHI-C2, PHI-V
 ; line 2
```

```
; [JTJ023-85]     : GAMMA-C, GAMMA-S, KIND
 ; line 2
; [CSA-S6-00]     : bSPECIAL, PHI-C, PHI-S, KIND
 ; line 2
; [CSA-S6-14]     : bSPECIAL, PHI-C, PHI-S, KIND
 ; line 2
; [IRC:21-2000]   : GAMMA-C, GAMMA-S
 ; line 2
; [SNiP 2.05.03-84*]  : nBRIDGE, bmb7mb8, mb7mb8Type, mb7, mb8, bmb9, mb9Type, mb9
 ; line 2
; [SP 35.13330.2011]  : nBRIDGE, bmb7mb8, mb7mb8Type, mb7, mb8, bmb9, mb9Type, mb9
 ; line 2
; Member Check    : bBEAM, bCOLM, bBRCE, bWALL, bSLAB, bMAT, bRBEAM, bRCOLM, bRBRCE, b
RWALL, bRSLAB, bRMAT, bSBEAM, bCANTIL, bUNDER-BM/COLM
   CODE=Eurocode2:04, 0, 0, 0, 1, 0, , , , ,
   1.5, 1.2, 1.15, 1, 0.85, 0, NO, 1.3, 0, 1.2, 1.3, , 0, 1.1, 0, 1.2, 0.15, 0.5, 2, 0
.08, 1, 5, NO, 0, YES, 0.6, 1.2, 1.2, 45, NO, 1.5, 2, NO, NO, 2.14, NO, YES, 0.7, 1.1,
 1, NO, NO, 0, 0
   YES, YES, YES, YES, YES, YES, YES, YES, YES, YES, YES, YES, YES, YES, YES, 0

*CONSTRAINT    ; Supports
; NODE_LIST, CONST(Dx,Dy,Dz,Rx,Ry,Rz), GROUP
   38 39 43 49 55 59 62 86 90 92to101 166to168 173 182 231 248 450 , 111111,
   451 453 456 554 557 558, 111111,

*REBAR-COLUMN    ; Modify Column Rebar Data
; iSEC, iSUBSEC, HOOP, RBNAME, bUseCornerRB, CornerRBNAME, iNQRB, iNROW, DO, SRBNAME,
SPACE, iSRBN1, iSRBN2, iBHJRN, SRBNAME_C, SPACE_C, iSRBN1_C, iSRBN2_C, bSameRebar
   13,    0, TIED, P14, YES, P18, 18, 9, 0.04, P12, 0.2, 2, 2, 0, P12, 0.2, 2, 2, YES
  707,    0, TIED, P14, NO, P14, 6, 3, 0.03, P8, 0.25, 2, 2, 0, P8, 0.25, 2, 2, YES

*FRAME-RLS    ; Beam End Release
; ELEM_LIST, bVALUE, FLAG-i, Fxi, Fyi, Fzi, Mxi, Myi, Mzi        ; 1st line
;                    FLAG-j, Fxj, Fyj, Fzj, Mxj, Myj, Mzj, GROUP ; 2nd line
     3,  NO, 000001, 0, 0, 0, 0, 0, 0
             000000, 0, 0, 0, 0, 0, 0,
     6,  NO, 000001, 0, 0, 0, 0, 0, 0
             000000, 0, 0, 0, 0, 0, 0,
     7,  NO, 000001, 0, 0, 0, 0, 0, 0
             000000, 0, 0, 0, 0, 0, 0,
    13,  NO, 000001, 0, 0, 0, 0, 0, 0
             000000, 0, 0, 0, 0, 0, 0,
    14,  NO, 000001, 0, 0, 0, 0, 0, 0
             000000, 0, 0, 0, 0, 0, 0,
    20,  NO, 000001, 0, 0, 0, 0, 0, 0
             000000, 0, 0, 0, 0, 0, 0,
    21,  NO, 000001, 0, 0, 0, 0, 0, 0
             000000, 0, 0, 0, 0, 0, 0,
    22,  NO, 000001, 0, 0, 0, 0, 0, 0
             000000, 0, 0, 0, 0, 0, 0,
    23,  NO, 000001, 0, 0, 0, 0, 0, 0
             000000, 0, 0, 0, 0, 0, 0,
    25,  NO, 000001, 0, 0, 0, 0, 0, 0
             000000, 0, 0, 0, 0, 0, 0,
    28,  NO, 000001, 0, 0, 0, 0, 0, 0
             000000, 0, 0, 0, 0, 0, 0,
    29,  NO, 000001, 0, 0, 0, 0, 0, 0
             000000, 0, 0, 0, 0, 0, 0,
    31,  NO, 000001, 0, 0, 0, 0, 0, 0
             000000, 0, 0, 0, 0, 0, 0,
    32,  NO, 000001, 0, 0, 0, 0, 0, 0
             000000, 0, 0, 0, 0, 0, 0,
```

```
   35,  NO, 000001, 0, 0, 0, 0, 0, 0
            000000, 0, 0, 0, 0, 0, 0,
   36,  NO, 000001, 0, 0, 0, 0, 0, 0
            000000, 0, 0, 0, 0, 0, 0,
   37,  NO, 000001, 0, 0, 0, 0, 0, 0
            000000, 0, 0, 0, 0, 0, 0,
   38,  NO, 000001, 0, 0, 0, 0, 0, 0
            000000, 0, 0, 0, 0, 0, 0,
   41,  NO, 000011, 0, 0, 0, 0, 0, 0
            000011, 0, 0, 0, 0, 0, 0,
 2000,  NO, 000011, 0, 0, 0, 0, 0, 0
            000000, 0, 0, 0, 0, 0, 0,
 2004,  NO, 000011, 0, 0, 0, 0, 0, 0
            000011, 0, 0, 0, 0, 0, 0,
 2005,  NO, 000011, 0, 0, 0, 0, 0, 0
            000011, 0, 0, 0, 0, 0, 0,
 2008,  NO, 000011, 0, 0, 0, 0, 0, 0
            000011, 0, 0, 0, 0, 0, 0,
 2009,  NO, 000011, 0, 0, 0, 0, 0, 0
            000011, 0, 0, 0, 0, 0, 0,
 2011,  NO, 000011, 0, 0, 0, 0, 0, 0
            000011, 0, 0, 0, 0, 0, 0,
 2012,  NO, 000011, 0, 0, 0, 0, 0, 0
            000011, 0, 0, 0, 0, 0, 0,
 6000,  NO, 000011, 0, 0, 0, 0, 0, 0
            000010, 0, 0, 0, 0, 0, 0,
 6001,  NO, 000010, 0, 0, 0, 0, 0, 0
            000010, 0, 0, 0, 0, 0, 0,
 6003,  NO, 000010, 0, 0, 0, 0, 0, 0
            000000, 0, 0, 0, 0, 0, 0,
 6004,  NO, 000010, 0, 0, 0, 0, 0, 0
            000011, 0, 0, 0, 0, 0, 0,
 6005,  NO, 000011, 0, 0, 0, 0, 0, 0
            000010, 0, 0, 0, 0, 0, 0,
 6006,  NO, 000010, 0, 0, 0, 0, 0, 0
            000010, 0, 0, 0, 0, 0, 0,
 6007,  NO, 000011, 0, 0, 0, 0, 0, 0
            000010, 0, 0, 0, 0, 0, 0,
 6009,  NO, 000010, 0, 0, 0, 0, 0, 0
            000010, 0, 0, 0, 0, 0, 0,
 6010,  NO, 000010, 0, 0, 0, 0, 0, 0
            000010, 0, 0, 0, 0, 0, 0,
 6012,  NO, 000010, 0, 0, 0, 0, 0, 0
            000011, 0, 0, 0, 0, 0, 0,
 6013,  NO, 000010, 0, 0, 0, 0, 0, 0
            000000, 0, 0, 0, 0, 0, 0,
 6015,  NO, 000010, 0, 0, 0, 0, 0, 0
            000010, 0, 0, 0, 0, 0, 0,
 6016,  NO, 000011, 0, 0, 0, 0, 0, 0
            000000, 0, 0, 0, 0, 0, 0,
 6017,  NO, 000000, 0, 0, 0, 0, 0, 0
            000010, 0, 0, 0, 0, 0, 0,
 6018,  NO, 000010, 0, 0, 0, 0, 0, 0
            000011, 0, 0, 0, 0, 0, 0,
 6020,  NO, 000011, 0, 0, 0, 0, 0, 0
            000010, 0, 0, 0, 0, 0, 0,
 6021,  NO, 000010, 0, 0, 0, 0, 0, 0
            000010, 0, 0, 0, 0, 0, 0,
 6022,  NO, 000000, 0, 0, 0, 0, 0, 0
            000010, 0, 0, 0, 0, 0, 0,
 6023,  NO, 000010, 0, 0, 0, 0, 0, 0
            000000, 0, 0, 0, 0, 0, 0,
```

```
  6024,  NO, 000010, 0, 0, 0, 0, 0, 0
             000010, 0, 0, 0, 0, 0, 0,
  6029,  NO, 000010, 0, 0, 0, 0, 0, 0
             000010, 0, 0, 0, 0, 0, 0,
  6030,  NO, 000010, 0, 0, 0, 0, 0, 0
             000010, 0, 0, 0, 0, 0, 0,
  6031,  NO, 000000, 0, 0, 0, 0, 0, 0
             000010, 0, 0, 0, 0, 0, 0,
  6035,  NO, 000010, 0, 0, 0, 0, 0, 0
             000011, 0, 0, 0, 0, 0, 0,
  6037,  NO, 000010, 0, 0, 0, 0, 0, 0
             000011, 0, 0, 0, 0, 0, 0,
  6038,  NO, 000010, 0, 0, 0, 0, 0, 0
             000000, 0, 0, 0, 0, 0, 0,
  6039,  NO, 000010, 0, 0, 0, 0, 0, 0
             000010, 0, 0, 0, 0, 0, 0,
  6040,  NO, 000010, 0, 0, 0, 0, 0, 0
             000010, 0, 0, 0, 0, 0, 0,
  6041,  NO, 000010, 0, 0, 0, 0, 0, 0
             000010, 0, 0, 0, 0, 0, 0,
  6042,  NO, 000010, 0, 0, 0, 0, 0, 0
             000010, 0, 0, 0, 0, 0, 0,
  6043,  NO, 000010, 0, 0, 0, 0, 0, 0
             000010, 0, 0, 0, 0, 0, 0,
  6044,  NO, 000010, 0, 0, 0, 0, 0, 0
             000010, 0, 0, 0, 0, 0, 0,
  6101,  NO, 000000, 0, 0, 0, 0, 0, 0
             000011, 0, 0, 0, 0, 0, 0,
  6103,  NO, 000011, 0, 0, 0, 0, 0, 0
             000000, 0, 0, 0, 0, 0, 0,
  6104,  NO, 000011, 0, 0, 0, 0, 0, 0
             000011, 0, 0, 0, 0, 0, 0,
  6105,  NO, 000000, 0, 0, 0, 0, 0, 0
             000010, 0, 0, 0, 0, 0, 0,
  6106,  NO, 000010, 0, 0, 0, 0, 0, 0
             000010, 0, 0, 0, 0, 0, 0,
  6107,  NO, 000001, 0, 0, 0, 0, 0, 0
             000000, 0, 0, 0, 0, 0, 0,
  6166,  NO, 000000, 0, 0, 0, 0, 0, 0
             000011, 0, 0, 0, 0, 0, 0,
  6167,  NO, 000011, 0, 0, 0, 0, 0, 0
             000000, 0, 0, 0, 0, 0, 0,
  6168,  NO, 000000, 0, 0, 0, 0, 0, 0
             000011, 0, 0, 0, 0, 0, 0,
  6218,  NO, 000001, 0, 0, 0, 0, 0, 0
             000000, 0, 0, 0, 0, 0, 0,
  6221,  NO, 000001, 0, 0, 0, 0, 0, 0
             000000, 0, 0, 0, 0, 0, 0,
  6222,  NO, 000001, 0, 0, 0, 0, 0, 0
             000000, 0, 0, 0, 0, 0, 0,

*NODALMASS    ; Nodal Masses
; NODE_LIST, mX, mY, mZ, rmX, rmY, rmZ
   112to114 204 239, 1.958, 0, 0, 0, 0, 0

*LOADTOMASS    ; Load to Mass
; DIR, bNODAL, bBEAM, bFLOOR, bPRES, GRAV
; LCNAME1, FACTOR1, LCNAME2, FACTOR2, ...   ; from line 1
   XY, YES, YES, YES, YES, 9.806
   PP, 1, G1+G2 copertura A, 3.7, Q sottotetto, 0.3, sporto gronda, 2, travi, 3
   parapetto, 1.5, muro, 4.6
```

```
*USE-STLD, PP

*SELFWEIGHT    ; Self Weight
; X, Y, Z, GROUP
0, 0, -1,

; End of data for load case [PP] -------------------------

*USE-STLD, G1+G2 copertura A

*BEAMLOAD    ; Element Beam Loads
; ELEM_LIST, CMD, TYPE, DIR, bPROJ, [ECCEN], [VALUE], GROUP
; ELEM_LIST, CMD, TYPE, TYPE, DIR, VX, VY, VZ, bPROJ, [ECCEN], [VALUE], GROUP
; [VALUE]        : D1, P1, D2, P2, D3, P3, D4, P4
; [ECCEN]        : bECCEN, ECCDIR, I-END, J-END, bJ-END
; [ADDITIONAL]   : bADDITIONAL, ADDITIONAL_I-END, ADDITIONAL_J-END, bADDITIONAL_J-END
  6005, BEAM   , UNILOAD, GZ, NO , NO, aDir[1], , , , 0, -1.79, 1, -1.79, 0, 0, 0, 0,
, NO, 0, 0, NO,
  6005, BEAM   , UNILOAD, GZ, NO , NO, aDir[1], , , , 0, -3.15, 1, -3.15, 0, 0, 0, 0,
, NO, 0, 0, NO,
  6006, BEAM   , UNILOAD, GZ, NO , NO, aDir[1], , , , 0, -3.525, 1, -3.525, 0, 0, 0, 0
, , NO, 0, 0, NO,
  6006, BEAM   , UNILOAD, GZ, NO , NO, aDir[1], , , , 0, -3.15, 1, -3.15, 0, 0, 0, 0,
, NO, 0, 0, NO,
  6007, BEAM   , UNILOAD, GZ, NO , NO, aDir[1], , , , 0, -3.525, 0.368421, -3.525, 0,
0, 0, 0, , NO, 0, 0, NO,
  6007, BEAM   , UNILOAD, GZ, NO , NO, aDir[1], , , , 0.684211, -3.525, 1, -3.525, 0,
0, 0, 0, , NO, 0, 0, NO,
  6007, BEAM   , UNILOAD, GZ, NO , NO, aDir[1], , , , 0.368421, -3.525, 0.684211, -3.5
25, 0, 0, 0, 0, , NO, 0, 0, NO,
  6009, BEAM   , UNILOAD, GZ, NO , NO, aDir[1], , , , 0, -3.15, 1, -3.15, 0, 0, 0, 0,
, NO, 0, 0, NO,
  6009, BEAM   , UNILOAD, GZ, NO , NO, aDir[1], , , , 0, -3.525, 1, -3.525, 0, 0, 0, 0
, , NO, 0, 0, NO,
  6010, BEAM   , UNILOAD, GZ, NO , NO, aDir[1], , , , 0, -1.79, 1, -1.79, 0, 0, 0, 0,
, NO, 0, 0, NO,
  6010, BEAM   , UNILOAD, GZ, NO , NO, aDir[1], , , , 0, -3.15, 1, -3.15, 0, 0, 0, 0,
, NO, 0, 0, NO,
  6012, BEAM   , UNILOAD, GZ, NO , NO, aDir[1], , , , 0.326141, -3.525, 0.652282, -3.5
25, 0, 0, 0, 0, , NO, 0, 0, NO,
  6012, BEAM   , UNILOAD, GZ, NO , NO, aDir[1], , , , 0.652282, -3.525, 1, -3.525, 0,
0, 0, 0, , NO, 0, 0, NO,
  6012, BEAM   , UNILOAD, GZ, NO , NO, aDir[1], , , , 0, -3.525, 0.326141, -3.525, 0,
0, 0, 0, , NO, 0, 0, NO,
  6013, BEAM   , UNILOAD, GZ, NO , NO, aDir[1], , , , 0, -3.15, 1, -3.15, 0, 0, 0, 0,
, NO, 0, 0, NO,
  6013, BEAM   , UNILOAD, GZ, NO , NO, aDir[1], , , , 0, -3.525, 1, -3.525, 0, 0, 0, 0
, , NO, 0, 0, NO,
  6015, BEAM   , UNILOAD, GZ, NO , NO, aDir[1], , , , 0, -3.15, 1, -3.15, 0, 0, 0, 0,
, NO, 0, 0, NO,
  6015, BEAM   , UNILOAD, GZ, NO , NO, aDir[1], , , , 0, -1.79, 1, -1.79, 0, 0, 0, 0,
, NO, 0, 0, NO,
  6022, BEAM   , UNILOAD, GZ, NO , NO, aDir[1], , , , 0, -3.15, 1, -3.15, 0, 0, 0, 0,
, NO, 0, 0, NO,
  6022, BEAM   , UNILOAD, GZ, NO , NO, aDir[1], , , , 0, -1.675, 1, -1.675, 0, 0, 0, 0
, , NO, 0, 0, NO,
  6023, BEAM   , UNILOAD, GZ, NO , NO, aDir[1], , , , 0, -3.15, 1, -3.15, 0, 0, 0, 0,
, NO, 0, 0, NO,
  6023, BEAM   , UNILOAD, GZ, NO , NO, aDir[1], , , , 0, -1.79, 1, -1.79, 0, 0, 0, 0,
, NO, 0, 0, NO,
  6029, BEAM   , UNILOAD, GZ, NO , NO, aDir[1], , , , 0, -1.675, 1, -1.675, 0, 0, 0, 0
, , NO, 0, 0, NO,
```

```
  6030, BEAM   , UNILOAD, GZ, NO , NO, aDir[1], , , , 0, -1.675, 1, -1.675, 0, 0, 0, 0
, , NO, 0, 0, NO,
  6030, BEAM   , UNILOAD, GZ, NO , NO, aDir[1], , , , 0, -3.15, 1, -3.15, 0, 0, 0, 0,
, NO, 0, 0, NO,
  6031, BEAM   , UNILOAD, GZ, NO , NO, aDir[1], , , , 0, -3.1, 1, -3.1, 0, 0, 0, 0, ,
NO, 0, 0, NO,
  6031, BEAM   , UNILOAD, GZ, NO , NO, aDir[1], , , , 0, -1.8, 1, -1.8, 0, 0, 0, 0, ,
NO, 0, 0, NO,
  6032, BEAM   , UNILOAD, GZ, NO , NO, aDir[1], , , , 0, -1.8, 1, -1.8, 0, 0, 0, 0, ,
NO, 0, 0, NO,
  6035, BEAM   , UNILOAD, GZ, NO , NO, aDir[1], , , , 0, -3.1, 1, -3.1, 0, 0, 0, 0, ,
NO, 0, 0, NO,
  6035, BEAM   , UNILOAD, GZ, NO , NO, aDir[1], , , , 0, -1.8, 1, -1.8, 0, 0, 0, 0, ,
NO, 0, 0, NO,
  6036, BEAM   , UNILOAD, GZ, NO , NO, aDir[1], , , , 0, -1.8, 1, -1.8, 0, 0, 0, 0, ,
NO, 0, 0, NO,
  6037, BEAM   , UNILOAD, GZ, NO , NO, aDir[1], , , , 0, -1.675, 1, -1.675, 0, 0, 0, 0
, , NO, 0, 0, NO,
  6037, BEAM   , UNILOAD, GZ, NO , NO, aDir[1], , , , 0, -3.15, 1, -3.15, 0, 0, 0, 0,
, NO, 0, 0, NO,
  6038, BEAM   , UNILOAD, GZ, NO , NO, aDir[1], , , , 0, -1.675, 1, -1.675, 0, 0, 0, 0
, , NO, 0, 0, NO,
  6100, BEAM   , UNILOAD, GZ, NO , NO, aDir[1], , , , 0, -1.79, 1, -1.79, 0, 0, 0, 0,
, NO, 0, 0, NO,
  6101, BEAM   , UNILOAD, GZ, NO , NO, aDir[1], , , , 0, -1.79, 1, -1.79, 0, 0, 0, 0,
, NO, 0, 0, NO,
  6102, BEAM   , UNILOAD, GZ, NO , NO, aDir[1], , , , 0, -1.79, 1, -1.79, 0, 0, 0, 0,
, NO, 0, 0, NO,

; End of data for load case [G1+G2 copertura A] -------------------------

*USE-STLD, G1+G2 copertura B

*BEAMLOAD    ; Element Beam Loads
; ELEM_LIST, CMD, TYPE, DIR, bPROJ, [ECCEN], [VALUE], GROUP
; ELEM_LIST, CMD, TYPE, TYPE, DIR, VX, VY, VZ, bPROJ, [ECCEN], [VALUE], GROUP
; [VALUE]       : D1, P1, D2, P2, D3, P3, D4, P4
; [ECCEN]       : bECCEN, ECCDIR, I-END, J-END, bJ-END
; [ADDITIONAL]  : bADDITIONAL, ADDITIONAL_I-END, ADDITIONAL_J-END, bADDITIONAL_J-END
  6039, BEAM   , UNILOAD, GZ, NO , NO, aDir[1], , , , 0, -5.125, 1, -5.125, 0, 0, 0, 0
, , NO, 0, 0, NO,
  6040, BEAM   , UNILOAD, GZ, NO , NO, aDir[1], , , , 0, -5.125, 1, -5.125, 0, 0, 0, 0
, , NO, 0, 0, NO,
  6041, BEAM   , UNILOAD, GZ, NO , NO, aDir[1], , , , 0, -5.125, 1, -5.125, 0, 0, 0, 0
, , NO, 0, 0, NO,
  6042, BEAM   , UNILOAD, GZ, NO , NO, aDir[1], , , , 0, -5.125, 1, -5.125, 0, 0, 0, 0
, , NO, 0, 0, NO,
  6043, BEAM   , UNILOAD, GZ, NO , NO, aDir[1], , , , 0, -5.125, 1, -5.125, 0, 0, 0, 0
, , NO, 0, 0, NO,
  6044, BEAM   , UNILOAD, GZ, NO , NO, aDir[1], , , , 0, -5.125, 1, -5.125, 0, 0, 0, 0
, , NO, 0, 0, NO,

; End of data for load case [G1+G2 copertura B] -------------------------

*USE-STLD, sporto gronda

*BEAMLOAD    ; Element Beam Loads
; ELEM_LIST, CMD, TYPE, DIR, bPROJ, [ECCEN], [VALUE], GROUP
; ELEM_LIST, CMD, TYPE, TYPE, DIR, VX, VY, VZ, bPROJ, [ECCEN], [VALUE], GROUP
; [VALUE]       : D1, P1, D2, P2, D3, P3, D4, P4
; [ECCEN]       : bECCEN, ECCDIR, I-END, J-END, bJ-END
; [ADDITIONAL]  : bADDITIONAL, ADDITIONAL_I-END, ADDITIONAL_J-END, bADDITIONAL_J-END
```

```
  6000, BEAM   , UNILOAD, GZ, NO , NO, aDir[1], , , , 0, -1, 1, -1, 0, 0, 0, 0, , NO,
0, 0, NO,
  6001, BEAM   , UNILOAD, GZ, NO , NO, aDir[1], , , , 0.88064, -1, 1, -1, 0, 0, 0, 0,
, NO, 0, 0, NO,
  6001, BEAM   , UNILOAD, GZ, NO , NO, aDir[1], , , , 0, -1, 0.88064, -1, 0, 0, 0, 0,
, NO, 0, 0, NO,
  6003, BEAM   , UNILOAD, GZ, NO , NO, aDir[1], , , , 0, -1, 1, -1, 0, 0, 0, 0, , NO,
0, 0, NO,
  6004, BEAM   , UNILOAD, GZ, NO , NO, aDir[1], , , , 0, -1, 1, -1, 0, 0, 0, 0, , NO,
0, 0, NO,
  6029, BEAM   , UNILOAD, GZ, NO , NO, aDir[1], , , , 0, -1, 1, -1, 0, 0, 0, 0, , NO,
0, 0, NO,
  6038, BEAM   , UNILOAD, GZ, NO , NO, aDir[1], , , , 0, -1, 1, -1, 0, 0, 0, 0, , NO,
0, 0, NO,
  6105, BEAM   , UNILOAD, GZ, NO , NO, aDir[1], , , , 0, -1, 1, -1, 0, 0, 0, 0, , NO,
0, 0, NO,
  6106, BEAM   , UNILOAD, GZ, NO , NO, aDir[1], , , , 0.34492, -1, 1, -1, 0, 0, 0, 0,
, NO, 0, 0, NO,
  6106, BEAM   , UNILOAD, GZ, NO , NO, aDir[1], , , , 0, -1, 0.34492, -1, 0, 0, 0, 0,
, NO, 0, 0, NO,

; End of data for load case [sporto gronda] -------------------------

*USE-STLD, Q neve

*BEAMLOAD    ; Element Beam Loads
; ELEM_LIST, CMD, TYPE, DIR, bPROJ, [ECCEN], [VALUE], GROUP
; ELEM_LIST, CMD, TYPE, TYPE, DIR, VX, VY, VZ, bPROJ, [ECCEN], [VALUE], GROUP
; [VALUE]       : D1, P1, D2, P2, D3, P3, D4, P4
; [ECCEN]       : bECCEN, ECCDIR, I-END, J-END, bJ-END
; [ADDITIONAL]  : bADDITIONAL, ADDITIONAL_I-END, ADDITIONAL_J-END, bADDITIONAL_J-END
  6005, BEAM   , UNILOAD, GZ, NO , NO, aDir[1], , , , 0, -1.79, 1, -1.79, 0, 0, 0, 0,
, NO, 0, 0, NO,
  6005, BEAM   , UNILOAD, GZ, NO , NO, aDir[1], , , , 0, -3.15, 1, -3.15, 0, 0, 0, 0,
, NO, 0, 0, NO,
  6006, BEAM   , UNILOAD, GZ, NO , NO, aDir[1], , , , 0, -3.15, 1, -3.15, 0, 0, 0, 0,
, NO, 0, 0, NO,
  6006, BEAM   , UNILOAD, GZ, NO , NO, aDir[1], , , , 0, -3.525, 1, -3.525, 0, 0, 0, 0
, , NO, 0, 0, NO,
  6007, BEAM   , UNILOAD, GZ, NO , NO, aDir[1], , , , 0, -3.525, 0.368421, -3.525, 0,
0, 0, 0, , NO, 0, 0, NO,
  6007, BEAM   , UNILOAD, GZ, NO , NO, aDir[1], , , , 0.368421, -3.525, 0.684211, -3.5
25, 0, 0, 0, 0, , NO, 0, 0, NO,
  6007, BEAM   , UNILOAD, GZ, NO , NO, aDir[1], , , , 0.684211, -3.525, 1, -3.525, 0,
0, 0, 0, , NO, 0, 0, NO,
  6009, BEAM   , UNILOAD, GZ, NO , NO, aDir[1], , , , 0, -3.15, 1, -3.15, 0, 0, 0, 0,
, NO, 0, 0, NO,
  6009, BEAM   , UNILOAD, GZ, NO , NO, aDir[1], , , , 0, -3.525, 1, -3.525, 0, 0, 0, 0
, , NO, 0, 0, NO,
  6010, BEAM   , UNILOAD, GZ, NO , NO, aDir[1], , , , 0, -1.79, 1, -1.79, 0, 0, 0, 0,
, NO, 0, 0, NO,
  6010, BEAM   , UNILOAD, GZ, NO , NO, aDir[1], , , , 0, -3.15, 1, -3.15, 0, 0, 0, 0,
, NO, 0, 0, NO,
  6012, BEAM   , UNILOAD, GZ, NO , NO, aDir[1], , , , 0.652282, -3.525, 1, -3.525, 0,
0, 0, 0, , NO, 0, 0, NO,
  6012, BEAM   , UNILOAD, GZ, NO , NO, aDir[1], , , , 0.326141, -3.525, 0.652282, -3.5
25, 0, 0, 0, 0, , NO, 0, 0, NO,
  6012, BEAM   , UNILOAD, GZ, NO , NO, aDir[1], , , , 0, -3.525, 0.326141, -3.525, 0,
0, 0, 0, , NO, 0, 0, NO,
  6013, BEAM   , UNILOAD, GZ, NO , NO, aDir[1], , , , 0, -3.525, 1, -3.525, 0, 0, 0, 0
, , NO, 0, 0, NO,
  6013, BEAM   , UNILOAD, GZ, NO , NO, aDir[1], , , , 0, -3.15, 1, -3.15, 0, 0, 0, 0,
```

```
, NO, 0, 0, NO,
  6015, BEAM   , UNILOAD, GZ, NO , NO, aDir[1], , , , 0, -1.79, 1, -1.79, 0, 0, 0, 0,
, NO, 0, 0, NO,
  6015, BEAM   , UNILOAD, GZ, NO , NO, aDir[1], , , , 0, -3.15, 1, -3.15, 0, 0, 0, 0,
, NO, 0, 0, NO,
  6022, BEAM   , UNILOAD, GZ, NO , NO, aDir[1], , , , 0, -1.675, 1, -1.675, 0, 0, 0, 0
, , NO, 0, 0, NO,
  6022, BEAM   , UNILOAD, GZ, NO , NO, aDir[1], , , , 0, -3.15, 1, -3.15, 0, 0, 0, 0,
, NO, 0, 0, NO,
  6023, BEAM   , UNILOAD, GZ, NO , NO, aDir[1], , , , 0, -3.15, 1, -3.15, 0, 0, 0, 0,
, NO, 0, 0, NO,
  6023, BEAM   , UNILOAD, GZ, NO , NO, aDir[1], , , , 0, -1.79, 1, -1.79, 0, 0, 0, 0,
, NO, 0, 0, NO,
  6029, BEAM   , UNILOAD, GZ, NO , NO, aDir[1], , , , 0, -1.675, 1, -1.675, 0, 0, 0, 0
, , NO, 0, 0, NO,
  6030, BEAM   , UNILOAD, GZ, NO , NO, aDir[1], , , , 0, -1.675, 1, -1.675, 0, 0, 0, 0
, , NO, 0, 0, NO,
  6030, BEAM   , UNILOAD, GZ, NO , NO, aDir[1], , , , 0, -3.15, 1, -3.15, 0, 0, 0, 0,
, NO, 0, 0, NO,
  6031, BEAM   , UNILOAD, GZ, NO , NO, aDir[1], , , , 0, -1.8, 1, -1.8, 0, 0, 0, 0, ,
NO, 0, 0, NO,
  6031, BEAM   , UNILOAD, GZ, NO , NO, aDir[1], , , , 0, -3.15, 1, -3.15, 0, 0, 0, 0,
, NO, 0, 0, NO,
  6032, BEAM   , UNILOAD, GZ, NO , NO, aDir[1], , , , 0, -1.8, 1, -1.8, 0, 0, 0, 0, ,
NO, 0, 0, NO,
  6035, BEAM   , UNILOAD, GZ, NO , NO, aDir[1], , , , 0, -1.8, 1, -1.8, 0, 0, 0, 0, ,
NO, 0, 0, NO,
  6035, BEAM   , UNILOAD, GZ, NO , NO, aDir[1], , , , 0, -3.15, 1, -3.15, 0, 0, 0, 0,
, NO, 0, 0, NO,
  6036, BEAM   , UNILOAD, GZ, NO , NO, aDir[1], , , , 0, -1.8, 1, -1.8, 0, 0, 0, 0, ,
NO, 0, 0, NO,
  6037, BEAM   , UNILOAD, GZ, NO , NO, aDir[1], , , , 0, -3.15, 1, -3.15, 0, 0, 0, 0,
, NO, 0, 0, NO,
  6037, BEAM   , UNILOAD, GZ, NO , NO, aDir[1], , , , 0, -1.675, 1, -1.675, 0, 0, 0, 0
, , NO, 0, 0, NO,
  6038, BEAM   , UNILOAD, GZ, NO , NO, aDir[1], , , , 0, -1.675, 1, -1.675, 0, 0, 0, 0
, , NO, 0, 0, NO,
  6039, BEAM   , UNILOAD, GZ, NO , NO, aDir[1], , , , 0, -5.125, 1, -5.125, 0, 0, 0, 0
, , NO, 0, 0, NO,
  6040, BEAM   , UNILOAD, GZ, NO , NO, aDir[1], , , , 0, -5.125, 1, -5.125, 0, 0, 0, 0
, , NO, 0, 0, NO,
  6041, BEAM   , UNILOAD, GZ, NO , NO, aDir[1], , , , 0, -5.125, 1, -5.125, 0, 0, 0, 0
, , NO, 0, 0, NO,
  6042, BEAM   , UNILOAD, GZ, NO , NO, aDir[1], , , , 0, -5.125, 1, -5.125, 0, 0, 0, 0
, , NO, 0, 0, NO,
  6043, BEAM   , UNILOAD, GZ, NO , NO, aDir[1], , , , 0, -5.125, 1, -5.125, 0, 0, 0, 0
, , NO, 0, 0, NO,
  6044, BEAM   , UNILOAD, GZ, NO , NO, aDir[1], , , , 0, -5.125, 1, -5.125, 0, 0, 0, 0
, , NO, 0, 0, NO,
  6100, BEAM   , UNILOAD, GZ, NO , NO, aDir[1], , , , 0, -1.79, 1, -1.79, 0, 0, 0, 0,
, NO, 0, 0, NO,
  6101, BEAM   , UNILOAD, GZ, NO , NO, aDir[1], , , , 0, -1.79, 1, -1.79, 0, 0, 0, 0,
, NO, 0, 0, NO,
  6102, BEAM   , UNILOAD, GZ, NO , NO, aDir[1], , , , 0, -1.79, 1, -1.79, 0, 0, 0, 0,
, NO, 0, 0, NO,

; End of data for load case [Q neve] -------------------------

*USE-STLD, SISMA X

*SEIS    ; Static Seismic Loads
; CODE=CODE, SFX, SFY, ECCX, ECCY, bACC, bINH, DESC, SFZR
```

```
   ; line 1
; [KS1992]   : SPT, EA, IF, PAX, PAY, PCX, PCY, RMFX, RMFY
   ; line 2
; [UBC1991]  : SPT, ZF, IF, PAX, PAY, PCX, PCY, NCX, NCY
   ; line 2
; [UBC1997]  : SPT, ZF, SST, CD, IF, PX, PY, NCX, NCY, PAX, PAY
   ; line 2
; [ATC306]   : SPC, EPV, PAX, PAY, PCX, PCY, RMFX, RMFY
   ; line 2
; [KS2000]   : SPT, EA, IF, PAX, PAY, PCX, PCY, RMFX, RMFY
   ; line 2
; [JIS]      : SPT, EA, SF, PAX, PAY, PCX, PCY, RMFX, RMFY, [JIS-AI]
   ; line 2
; [IBC2000]  : SDC, SC, MS, M1, IF, PX, PY, PCX, PCY, RMFX, RMFY
   ; line 2
; [EURO1996] : S, QO, KD, KR, KW, ALPHA, FPX, FPY
   ; line 2
; [CH2002]   : NSC, SFI, SC, ST, DR, EQ, bMM, FPX, FPY
   ; line 2
; [CHSH2003] : SFI, SC, ST, DR, EQ, bMM, FPX, FPY
   ; line 2
; [NBC1995]  : ZVR, AZ, VZ, IF, FF, PAX, PAY, PCX, PCY, FMFX, FMFY
   ; line 2
; [IS2002]   : SZ, ST, IF, DAMP, FPX, FPY, RFX, RFY
   ; line 2
; [TAIWAN99] : SZ, ST, IF, SMF, PM, PAX, PAY, PApX, PApY, PFX, PFY, RMFX, RMFY
   ; line 2
; [KBC2005]  : RA, SZ(Sds), SC(Sd1), SUG, bCPR, IF, iP, PAX, PAY, PApX, PApY, RMFX, RM
FY ; line 2
; [TAIWAN06] : SZ, Sds, Sd1, Sms, Sm1,Nda, Ndv,Nma, Nmv, ST, Fda, Fdv, Fma, Fmv, SubZ,

;  Sds_t, Sms_t, Td0_t, Tm0_t, IF, ALPHA, PM, PAX, PAY, PApX, PApY, PFX, PFY, RMFX, RM
FY ; line 2
; [EURO2004] : iGR, iSPE, S, TB, TC, TD, AG, Q, LBF, IF, FPX, FPY,
   ; line 2
; [JIS-AI]   : bUSER, STORY1, XDIR1, YDIR1, STORY2, XDIR2, YDIR2, ...
; [KBC2009]  : SZ, ZF, SC, CU, FA, Fv, SDS, SD1, SUG, IF, ip, PAX, PAY, PApX, PApY, RM
FX, RMFY
; [TAIWAN11] : SZ, Sds, Sd1, Sms, Sm1,Nda, Ndv,Nma, Nmv, ST, Fda, Fdv, Fma, Fmv, SubZ,

;  Sds_t, Sms_t, Td0_t, Tm0_t, IF, ALPHA, PM, PAX, PAY, PApX, PApY, PFX, PFY, RMFX, RM
FY ; line 2
; [NTC2008]  : iGR, iSPE, S, TB, TC, TD, AG, Q, AMPF, Tc*, FPX, FPY,
   ; line 2
; [CH2010]   : NSC, SFI, SC, ST, DR, EQ, bMM, FPX, FPY
   ; line 2
; [IBC2009]  : SC, Ss, S1, Fa, Fv, Sds, Sd1, Cu, TL, OC, IF, iP, PAX, PAY, PApX, PApY,
 RMFX, RMFY ; line 2
; [IBC2012]  : SC, Ss, S1, Fa, Fv, Sds, Sd1, Cu, TL, RC, IF, iP, PAX, PAY, PApX, PApY,
 RMFX, RMFY ; line 2
; [NTC2012]  : iGR, iSPE, S, TB, TC, TD, AG, Q, AMPF, Tc*, FPX, FPY,
   ; line 2
; [P100_2013]: iSPE, TB, TC, TD, AG, Q, IF, FPX, FPY
   ; line 2
; [IS1893_2016]: Zone, Soil, IF, Damp, Peri.X, Peri.Y, RsRdFact_X, RsRdFact_Y
   ; line 2
; [NTC2018]  : iGR, iSPE, S, TB, TC, TD, AG, Q, AMPF, Tc*, FPX, FPY,
   ; line 2
; SSTORY1, ESTORY1, ADDX1, ADDY1, ...
   ; from line 3
   CODE=NTC2018, 1, 0, POS, POS, NO, NO, , 0
        2, 4, 1.427, 0.147, 0.44, 2.336, 0.184, 1, 2.47, 0.273, 0, 0
```

```
; End of data for load case [SISMA X] -------------------------

*USE-STLD, SISMA Y

*SEIS    ; Static Seismic Loads
; CODE=CODE, SFX, SFY, ECCX, ECCY, bACC, bINH, DESC, SFZR
   ; line 1
; [KS1992]   : SPT, EA, IF, PAX, PAY, PCX, PCY, RMFX, RMFY
   ; line 2
; [UBC1991]  : SPT, ZF, IF, PAX, PAY, PCX, PCY, NCX, NCY
   ; line 2
; [UBC1997]  : SPT, ZF, SST, CD, IF, PX, PY, NCX, NCY, PAX, PAY
   ; line 2
; [ATC306]   : SPC, EPV, PAX, PAY, PCX, PCY, RMFX, RMFY
   ; line 2
; [KS2000]   : SPT, EA, IF, PAX, PAY, PCX, PCY, RMFX, RMFY
   ; line 2
; [JIS]      : SPT, EA, SF, PAX, PAY, PCX, PCY, RMFX, RMFY, [JIS-AI]
   ; line 2
; [IBC2000]  : SDC, SC, MS, M1, IF, PX, PY, PCX, PCY, RMFX, RMFY
   ; line 2
; [EURO1996] : S, QO, KD, KR, KW, ALPHA, FPX, FPY
   ; line 2
; [CH2002]   : NSC, SFI, SC, ST, DR, EQ, bMM, FPX, FPY
   ; line 2
; [CHSH2003] : SFI, SC, ST, DR, EQ, bMM, FPX, FPY
   ; line 2
; [NBC1995]  : ZVR, AZ, VZ, IF, FF, PAX, PAY, PCX, PCY, FMFX, FMFY
   ; line 2
; [IS2002]   : SZ, ST, IF, DAMP, FPX, FPY, RFX, RFY
   ; line 2
; [TAIWAN99] : SZ, ST, IF, SMF, PM, PAX, PAY, PApX, PApY, PFX, PFY, RMFX, RMFY
   ; line 2
; [KBC2005]  : RA, SZ(Sds), SC(Sd1), SUG, bCPR, IF, iP, PAX, PAY, PApX, PApY, RMFX, RM
FY ; line 2
; [TAIWAN06] : SZ, Sds, Sd1, Sms, Sm1,Nda, Ndv,Nma, Nmv, ST, Fda, Fdv, Fma, Fmv, SubZ,

;  Sds_t, Sms_t, Td0_t, Tm0_t, IF, ALPHA, PM, PAX, PAY, PApX, PApY, PFX, PFY, RMFX, RM
FY ; line 2
; [EURO2004] : iGR, iSPE, S, TB, TC, TD, AG, Q, LBF, IF, FPX, FPY,
   ; line 2
; [JIS-AI]   : bUSER, STORY1, XDIR1, YDIR1, STORY2, XDIR2, YDIR2, ...
; [KBC2009]  : SZ, ZF, SC, CU, FA, Fv, SDS, SD1, SUG, IF, ip, PAX, PAY, PApX, PApY, RM
FX, RMFY
; [TAIWAN11] : SZ, Sds, Sd1, Sms, Sm1,Nda, Ndv,Nma, Nmv, ST, Fda, Fdv, Fma, Fmv, SubZ,

;  Sds_t, Sms_t, Td0_t, Tm0_t, IF, ALPHA, PM, PAX, PAY, PApX, PApY, PFX, PFY, RMFX, RM
FY ; line 2
; [NTC2008]  : iGR, iSPE, S, TB, TC, TD, AG, Q, AMPF, Tc*, FPX, FPY,
   ; line 2
; [CH2010]   : NSC, SFI, SC, ST, DR, EQ, bMM, FPX, FPY
   ; line 2
; [IBC2009]  : SC, Ss, S1, Fa, Fv, Sds, Sd1, Cu, TL, OC, IF, iP, PAX, PAY, PApX, PApY,
 RMFX, RMFY ; line 2
; [IBC2012]  : SC, Ss, S1, Fa, Fv, Sds, Sd1, Cu, TL, RC, IF, iP, PAX, PAY, PApX, PApY,
 RMFX, RMFY ; line 2
; [NTC2012]  : iGR, iSPE, S, TB, TC, TD, AG, Q, AMPF, Tc*, FPX, FPY,
   ; line 2
; [P100_2013]: iSPE, TB, TC, TD, AG, Q, IF, FPX, FPY
   ; line 2
; [IS1893_2016]: Zone, Soil, IF, Damp, Peri.X, Peri.Y, RsRdFact_X, RsRdFact_Y
```

```
   ; line 2
; [NTC2018]  : iGR, iSPE, S, TB, TC, TD, AG, Q, AMPF, Tc*, FPX, FPY,
   ; line 2
; SSTORY1, ESTORY1, ADDX1, ADDY1, ...
   ; from line 3
   CODE=NTC2018, 0, 1, POS, POS, NO, NO, , 0
        2, 4, 1.427, 0.147, 0.44, 2.336, 0.184, 1, 2.47, 0.273, 0, 0

; End of data for load case [SISMA Y] -------------------------

*USE-STLD, travi

*BEAMLOAD    ; Element Beam Loads
; ELEM_LIST, CMD, TYPE, DIR, bPROJ, [ECCEN], [VALUE], GROUP
; ELEM_LIST, CMD, TYPE, TYPE, DIR, VX, VY, VZ, bPROJ, [ECCEN], [VALUE], GROUP
; [VALUE]       : D1, P1, D2, P2, D3, P3, D4, P4
; [ECCEN]       : bECCEN, ECCDIR, I-END, J-END, bJ-END
; [ADDITIONAL]  : bADDITIONAL, ADDITIONAL_I-END, ADDITIONAL_J-END, bADDITIONAL_J-END
  6039, BEAM   , UNILOAD, GZ, NO , NO, aDir[1], , , , 0, -1, 1, -1, 0, 0, 0, 0, , NO,
0, 0, NO,
  6040, BEAM   , UNILOAD, GZ, NO , NO, aDir[1], , , , 0, -1, 1, -1, 0, 0, 0, 0, , NO,
0, 0, NO,
  6041, BEAM   , UNILOAD, GZ, NO , NO, aDir[1], , , , 0, -1, 1, -1, 0, 0, 0, 0, , NO,
0, 0, NO,
  6042, BEAM   , UNILOAD, GZ, NO , NO, aDir[1], , , , 0, -1, 1, -1, 0, 0, 0, 0, , NO,
0, 0, NO,
  6043, BEAM   , UNILOAD, GZ, NO , NO, aDir[1], , , , 0, -1, 1, -1, 0, 0, 0, 0, , NO,
0, 0, NO,
  6044, BEAM   , UNILOAD, GZ, NO , NO, aDir[1], , , , 0, -1, 1, -1, 0, 0, 0, 0, , NO,
0, 0, NO,
  6045, BEAM   , UNILOAD, GZ, NO , NO, aDir[1], , , , 0, -1, 1, -1, 0, 0, 0, 0, , NO,
0, 0, NO,

; End of data for load case [travi] -------------------------

*USE-STLD, parapetto

*BEAMLOAD    ; Element Beam Loads
; ELEM_LIST, CMD, TYPE, DIR, bPROJ, [ECCEN], [VALUE], GROUP
; ELEM_LIST, CMD, TYPE, TYPE, DIR, VX, VY, VZ, bPROJ, [ECCEN], [VALUE], GROUP
; [VALUE]       : D1, P1, D2, P2, D3, P3, D4, P4
; [ECCEN]       : bECCEN, ECCDIR, I-END, J-END, bJ-END
; [ADDITIONAL]  : bADDITIONAL, ADDITIONAL_I-END, ADDITIONAL_J-END, bADDITIONAL_J-END
  6000, BEAM   , UNILOAD, GZ, NO , NO, aDir[1], , , , 0, -1, 1, -1, 0, 0, 0, 0, , NO,
0, 0, NO,
  6001, BEAM   , UNILOAD, GZ, NO , NO, aDir[1], , , , 0.88064, -1, 1, -1, 0, 0, 0, 0,
, NO, 0, 0, NO,
  6001, BEAM   , UNILOAD, GZ, NO , NO, aDir[1], , , , 0, -1, 0.88064, -1, 0, 0, 0, 0,
, NO, 0, 0, NO,
  6003, BEAM   , UNILOAD, GZ, NO , NO, aDir[1], , , , 0, -1, 1, -1, 0, 0, 0, 0, , NO,
0, 0, NO,
  6004, BEAM   , UNILOAD, GZ, NO , NO, aDir[1], , , , 0, -1, 1, -1, 0, 0, 0, 0, , NO,
0, 0, NO,
  6005, BEAM   , UNILOAD, GZ, NO , NO, aDir[1], , , , 0, -1, 1, -1, 0, 0, 0, 0, , NO,
0, 0, NO,
  6007, BEAM   , UNILOAD, GZ, NO , NO, aDir[1], , , , 0.368421, -1, 0.684211, -1, 0, 0
, 0, 0, , NO, 0, 0, NO,
  6007, BEAM   , UNILOAD, GZ, NO , NO, aDir[1], , , , 0.684211, -1, 1, -1, 0, 0, 0, 0,
 , NO, 0, 0, NO,
  6007, BEAM   , UNILOAD, GZ, NO , NO, aDir[1], , , , 0, -1, 0.368421, -1, 0, 0, 0, 0,
 , NO, 0, 0, NO,
  6010, BEAM   , UNILOAD, GZ, NO , NO, aDir[1], , , , 0, -1, 1, -1, 0, 0, 0, 0, , NO,
```

```
0, 0, NO,
  6012, BEAM   , UNILOAD, GZ, NO , NO, aDir[1], , , , 0.326141, -1, 0.652282, -1, 0, 0
, 0, 0, , NO, 0, 0, NO,
  6012, BEAM   , UNILOAD, GZ, NO , NO, aDir[1], , , , 0, -1, 0.326141, -1, 0, 0, 0, 0,
 , NO, 0, 0, NO,
  6012, BEAM   , UNILOAD, GZ, NO , NO, aDir[1], , , , 0.652282, -1, 1, -1, 0, 0, 0, 0,
 , NO, 0, 0, NO,
  6015, BEAM   , UNILOAD, GZ, NO , NO, aDir[1], , , , 0, -1, 1, -1, 0, 0, 0, 0, , NO,
0, 0, NO,
  6020, BEAM   , UNILOAD, GZ, NO , NO, aDir[1], , , , 0, -1, 1, -1, 0, 0, 0, 0, , NO,
0, 0, NO,
  6021, BEAM   , UNILOAD, GZ, NO , NO, aDir[1], , , , 0, -1, 1, -1, 0, 0, 0, 0, , NO,
0, 0, NO,
  6023, BEAM   , UNILOAD, GZ, NO , NO, aDir[1], , , , 0, -1, 1, -1, 0, 0, 0, 0, , NO,
0, 0, NO,
  6031, BEAM   , UNILOAD, GZ, NO , NO, aDir[1], , , , 0, -1, 1, -1, 0, 0, 0, 0, , NO,
0, 0, NO,
  6032, BEAM   , UNILOAD, GZ, NO , NO, aDir[1], , , , 0, -1, 1, -1, 0, 0, 0, 0, , NO,
0, 0, NO,
  6035, BEAM   , UNILOAD, GZ, NO , NO, aDir[1], , , , 0, -1, 1, -1, 0, 0, 0, 0, , NO,
0, 0, NO,
  6036, BEAM   , UNILOAD, GZ, NO , NO, aDir[1], , , , 0, -1, 1, -1, 0, 0, 0, 0, , NO,
0, 0, NO,
  6044, BEAM   , UNILOAD, GZ, NO , NO, aDir[1], , , , 0, -1, 1, -1, 0, 0, 0, 0, , NO,
0, 0, NO,
  6045, BEAM   , UNILOAD, GZ, NO , NO, aDir[1], , , , 0, -1, 1, -1, 0, 0, 0, 0, , NO,
0, 0, NO,
  6105, BEAM   , UNILOAD, GZ, NO , NO, aDir[1], , , , 0, -1, 1, -1, 0, 0, 0, 0, , NO,
0, 0, NO,
  6106, BEAM   , UNILOAD, GZ, NO , NO, aDir[1], , , , 0.34492, -1, 1, -1, 0, 0, 0, 0,
, NO, 0, 0, NO,
  6106, BEAM   , UNILOAD, GZ, NO , NO, aDir[1], , , , 0, -1, 0.34492, -1, 0, 0, 0, 0,
, NO, 0, 0, NO,

; End of data for load case [parapetto] -------------------------

*USE-STLD, muro

*BEAMLOAD    ; Element Beam Loads
; ELEM_LIST, CMD, TYPE, DIR, bPROJ, [ECCEN], [VALUE], GROUP
; ELEM_LIST, CMD, TYPE, TYPE, DIR, VX, VY, VZ, bPROJ, [ECCEN], [VALUE], GROUP
; [VALUE]       : D1, P1, D2, P2, D3, P3, D4, P4
; [ECCEN]       : bECCEN, ECCDIR, I-END, J-END, bJ-END
; [ADDITIONAL]  : bADDITIONAL, ADDITIONAL_I-END, ADDITIONAL_J-END, bADDITIONAL_J-END
  6039, BEAM   , UNILOAD, GZ, NO , NO, aDir[1], , , , 0, -1, 1, -1, 0, 0, 0, 0, , NO,
0, 0, NO,
  6040, BEAM   , UNILOAD, GZ, NO , NO, aDir[1], , , , 0, -1, 1, -1, 0, 0, 0, 0, , NO,
0, 0, NO,
  6041, BEAM   , UNILOAD, GZ, NO , NO, aDir[1], , , , 0, -1, 1, -1, 0, 0, 0, 0, , NO,
0, 0, NO,
  6042, BEAM   , UNILOAD, GZ, NO , NO, aDir[1], , , , 0, -1, 1, -1, 0, 0, 0, 0, , NO,
0, 0, NO,
  6043, BEAM   , UNILOAD, GZ, NO , NO, aDir[1], , , , 0, -1, 1, -1, 0, 0, 0, 0, , NO,
0, 0, NO,
  6044, BEAM   , UNILOAD, GZ, NO , NO, aDir[1], , , , 0, -1, 1, -1, 0, 0, 0, 0, , NO,
0, 0, NO,

; End of data for load case [muro] -------------------------

*SFUNCTION    ; Spectrum Function
; FUNC=NAME, iTYPE, iMETHOD, SCALE/MAX, GRAV, DRATIO, DESC, RMF      ; line 1
;   SPEC_CODE, [CODE_DATA]                                           ; line 2
```

```
;       PERIOD1, VALUE1, PERIOD2, VALUE2, ...                          ; from line 3
;[CODE_DATA] : NSC, SFI, SC, EQ, TG, DP, MaxEQ
        ; CH2001
;[CODE_DATA] : NSC, SFI, SC, EQ, TG, DP, MaxEQ, nLForce                ; CH2010
;[CODE_DATA] : SFI, SC, EQ, TG, DP, MaxEQ                              ; CHSH2003
;[CODE_DATA] : DIV, SC, SFI, EQ, TG, G                                 ; GB50111_2006
;[CODE_DATA] : BT, ZM, ST, SI, SC, TG, CI, CS, CD, EPA, SMAX, PERIOD ; JTG/T B02-01-20
08
;[CODE_DATA] : iSPE, SParam, TB, TC, TD, AG, Q, IF, FPX, FPY          ; P100-1(2013)
   FUNC=Muscoline_T1_C_q=1__CU III, 1, 0, 1, 9.806, 0.05, , 1.000000
   USER
          0.000000,         0.263,   0.007000,         0.282
          0.015000,         0.301,   0.022000,          0.32
          0.029000,          0.34,   0.037000,         0.359
          0.044000,         0.378,   0.051000,         0.398
          0.059000,         0.417,   0.066000,         0.436
          0.073000,         0.456,   0.081000,         0.475
          0.088000,         0.494,   0.095000,         0.513
          0.103000,         0.533,   0.110000,         0.552
          0.117000,         0.571,   0.125000,         0.591
          0.132000,          0.61,   0.139000,         0.629
          0.147000,         0.648,   0.161000,         0.648
          0.176000,         0.648,   0.191000,         0.648
          0.206000,         0.648,   0.220000,         0.648
          0.235000,         0.648,   0.250000,         0.648
          0.264000,         0.648,   0.279000,         0.648
          0.294000,         0.648,   0.308000,         0.648
          0.323000,         0.648,   0.338000,         0.648
          0.352000,         0.648,   0.367000,         0.648
          0.382000,         0.648,   0.396000,         0.648
          0.411000,         0.648,   0.426000,         0.648
          0.440000,         0.648,   0.535000,         0.534
          0.630000,         0.453,   0.725000,         0.394
          0.820000,         0.349,   0.914000,         0.312
          1.009000,         0.283,   1.104000,         0.259
          1.199000,         0.238,   1.293000,         0.221
          1.388000,         0.206,   1.483000,         0.193
          1.578000,         0.181,   1.672000,         0.171
          1.767000,         0.162,   1.862000,         0.153
          1.957000,         0.146,   2.051000,         0.139
          2.146000,         0.133,   2.241000,         0.127
          2.336000,         0.122,   2.419000,         0.114
          2.502000,         0.107,   2.585000,           0.1
          2.669000,         0.094,   2.752000,         0.088
          2.835000,         0.083,   2.918000,         0.078
          3.001000,         0.074,   3.085000,          0.07
          3.168000,         0.066,   3.251000,         0.063
          3.334000,          0.06,   3.418000,         0.057
          3.501000,         0.054,   3.584000,         0.052
          3.667000,          0.05,   3.750000,         0.047
          3.834000,         0.045,   3.917000,         0.043
          4.000000,         0.042

*SPLDCASE    ; Spectrum Load Cases
; NAME=NAME, DIR, ANGLE, SCALE, PMFT, bDAMP, bECC, INTERP, DESC,       ; line 1
;       COMTYPE, bADDSIGN, iSIGNTYPE, bMODE, bASA, iMAJ               ; line 2
;       FUNC1, FUNC2, FUNC3, ...                                      ; line 3
;       bUSE1, dFACTOR1, bUSE2, dFACTOR2, ..., bUSEn, dFACTORn        ; line 4      (
bMODE=YES)
;       bCDR, [DR-DC]                                                 ; line 5      (
bDAMP=YES)
;       SMETHOD, bAUTO, ECC, bCONSGL, bTORMOMENT                      ; line 6      (
```

```
bECC=YES)
;      STORY1, ECC1, STORY2, ECC2, ..., STORYn, ECCn                    ; from line 7 (
bECC=YES)
; [DR-DC] : iMDTYPE, DALL, iMODE1, DAMPING1, iMODE2, DAMPING2, ...      ; iMDTYPE=1
;         : iMDTYPE, iCOEF, bMASSP, MASSC, bSTIFFP, STIFFC              ; iMDTYPE=2, iC
OEF=1
;         : iMDTYPE, iCOEF, iCALC, bMASSP, FP1, DR1, bSTIFFP, FP2, DR2 ; iMDTYPE=2, iC
OEF=2
;         : iMDTYPE                                                     ; iMDTYPE=3
   NAME=sisma_x, XY, 0, 1, 1, NO, YES, LOG,
        CQC, YES, 0, YES, NO, 0
        Muscoline_T1_C_q=1__CU III
        YES, 1,YES, 1,YES, 1,YES, 1,YES, 1,YES, 1,YES, 1,YES, 1,YES, 1,YES, 1,YES, 1
        0, YES, 5, YES, NO
        Roof, 0.655603, 2F, 0, 1F, 0.655603

   NAME=sisma_y, XY, 90, 1, 1, NO, YES, LOG,
        CQC, YES, 0, YES, NO, 0
        Muscoline_T1_C_q=1__CU III
        YES, 1,YES, 1,YES, 1,YES, 1,YES, 1,YES, 1,YES, 1,YES, 1,YES, 1,YES, 1,YES, 1
        0, YES, 5, YES, NO
        Roof, 0.8475, 2F, 0.124375, 1F, 0.8475



*PUSHOVER-CTRL    ; Pushover Global Control
; GEOM, bPERMIT, STEP, iMAX, bDISP, bFORCE, bENERGY, DNORM, FNORM, ENORM, bSTOP, bBEAM
, bWALL, METHOD, bAXIS, bAXISBEAM, bAXISWALL, bAXISTRUSS, SUPPORT, ELASTIC, bSUPPORT,
bSUPPORTUPLIFT, bSUPPORTCOLLAPSE, ; 1st line : Analysis Option
; NODECONNECTIVITY, nBEAMy, nBEAMz, bWALL, nWALLy, nWALLz, dR, WSize, bMEMB, nRCCODE,
bUseRef, bGraph, bCurve ; 1st line(2) : Analysis Option
; bSYMMETRIC, a1(+), a1(-), a2(+), a2(-)                               ; 2nd line : De
fault Stiffness Ratio(Trilinear)
; bSYMMETRIC, a1(+), a1(-)                                             ; 3rd line : De
fault Stiffness Ratio(Bilinear)
; BM_POS, bBUCKLING, bCR_AIJ, bIgnoreElem                              ; 4th line
; BM_POS, bBUCKLING, bCR_AIJ, 1, CF, WAL, bBTL, BTL, bERTH, ERTH, bSBR, SBR, GRP ; 4th
 line (Eurocode)
; BM_POS, bBUCKLING, bCR_AIJ, 2, bAXIAL_AIJ                            ; 4th line (AIJ
)
; LCNAME1, FACT1, LCNAME2, FACT2, ...                                  ; from line 5th
 line  : Initial Load
; LCTYPE1, LCTYPE2, ...                                                ; Last line
       : Initial Load
   0, YES, 10, 10, YES, NO, NO, 0.001, 0.001, 0.001, NO, YES, NO, 0, NO, YES, NO, NO,
0, 1, NO, NO, NO, 1, 15, 15, NO, EQUAL, 20, 10, 0.4, NO, 0, NO, YES, YES
   YES, 0.1, 0.1, 0.05, 0.05
   YES, 0.05, 0.05
   I, NO, YES, YES, 1, 1, 1.6, NO, 1.6, NO, 0.85, NO, 0.575,
   PP, 1, G1+G2 copertura A, 3.7, G1+G2 copertura B, 1.5, Q sottotetto, 0.3
   sporto gronda, 2, travi, 3, parapetto, 1.5, muro, 4.6
   1, 1, 1, 1, 1, 1, 1, 1
*HINGE-TYPE    ; Pushover Hinge Type/Properties
; NAME=NAME, DESC                                                      ;
1st line
; ELEM_TYP, WALL_TYP, MAT_TYP, DEFINITION, INTERACTION, bHINGELENGTH, INTEGRATION   ;
2nd line (ELEM_TYP=WALL)
; ELEM_TYP, MAT_TYP, DEFINITION, INTERACTION , bHINGELENGTH, INTEGRATION            ;
2nd line
; HINGE_TYPE, PROP, FIBER, FIBER_AUTO, AUTO_R, R, AUTO_OUTPL, OUTPL                 ;
3rd line
; bFx, HLOC[NSECT], [DISTR], [RAT_I], [RAT_J], SKCV, [M_PROP]   ; 4rd line
```

```
; bFy, HLOC[NSECT], [DISTR], [RAT_I], [RAT_J], SKCV, [M_PROP]   ; 5th line
; bFz, HLOC[NSECT], [DISTR], [RAT_I], [RAT_J], SKCV, [M_PROP]   ; 6th line
; bMx, HLOC[NSECT], [DISTR], [RAT_I], [RAT_J], SKCV, [M_PROP]   ; 7th line
; bMy, HLOC[NSECT], [DISTR], [RAT_I], [RAT_J], SKCV, [M_PROP]   ; 8th line
; bMz, HLOC[NSECT], [DISTR], [RAT_I], [RAT_J], SKCV, [M_PROP]   ; 9th line
; CALC, bSYM-IJ, [YSDATA]-I, [YSDATA]-J                  ; 10th line (MAT_TYPE=RC,STEE
L, INTERACTION=PMM)
; BLDG_TYPE, COMP, SHEAR, COEFF                          ; 10th line (MAT_TYPE=MASONRY
,  DEFINITION=PIER)
; COMP, SHEAR, FORC                                      ; 10th line (MAT_TYPE=MASONRY
,  DEFINITION=SPAN)
; [M_PROP] : CALC, TYPE, [PROP]
    ; (SKCV=BI,TRI,SLBI,SLTR)
; [M_PROP] : CALC, TYPE, bSYM_IJ, [PROP]-I, [PROP]-J
    ; (SKCV=BI,TRI,SLBI,SLTR, HLOC=IJ)
; [M_PROP] : CALC, [FEMA]
    ; (SKCV=FEMA)
; [M_PROP] : CALC, [EC8]
    ; (SKCV=EC8)
; [M_PROP] : CALC, bSYM_IJ, [FEMA]-I  [FEMA]-J
    ; (SKCV=FEMA, HLOC=IJ)
; [PROP] : bSYM, RATIO_OPT, [DATA]-TENS, [DATA]-COMP, STIF_METHOD, STIFF
    ; (SKCV=BI,TRI)
; [PROP] : bSYM, RATIO_OPT, [DATA]-TENS, [DATA]-COMP, STIF_METHOD, STIFF, bAutoSpan, S
PAN ; (SKCV=TRI, RATIO_OPT=AIJ)
; [PROP] : SLIP_TYPE, RATIO_OPT, [DATA]-TENS, [DATA]-COMP, STIF_METHOD, STIFF, IGT, IG
C    ; (SKCV=SLBI,SLTR)
; [DATA] : YS-P1, YS-P2, YS-P3, SRR1, SRR2, SRRy,
    ; (TYPE=RATIO)
; [DATA] : YS-P1, YS-P2, YS-P3, YD-D1, YD-D2, YD-D3
    ; (TYPE=DEFORM)
; [FEMA] : DEFORM, bSYM, bMULT, SUBCOUNT, YS-P1P, YS-P1N, bUSER-D, YD-D1P, YD-D1N,
;        : STIF_METHOD, STIFF, IO-P, LS-P, CP-P, IO-N, LS-N, CP-N, bUSER-RATIO
;        : bSHAPE, SHAPE, bSTRLOSS, STRLOSS, INFILLTYPE, bTOTALSTRLOSS, TOTALSTRLOSS,
UNLOADTYPE, dEXP, dPRFACT, INFILLSTIFF, KMI, KMS, HM, TM
;        : EN-FR, DN-FR, CN-FR, BN-FR, A-FR, BP-FR, CP-FR, DP-FR, EP-FR  ; F/FY or M/M
Y
;        : EN-DR, DN-DR, CN-DR, BN-DR, A-DR, BP-DR, CP-DR, DP-DR, EP-DR  ; D/DY
;        : AXIAL, IO-P, LS-P, CP-P, IO-N, LS-N, CP-N                     ; (bMULT=YES)
, Loop  SUBCOUNT
;        : EN-FR, DN-FR, CN-FR, BN-FR, A-FR, BP-FR, CP-FR, DP-FR, EP-FR  ; (bMULT=YES)
 F/FY or M/MY
;        : EN-DR, DN-DR, CN-DR, BN-DR, A-DR, BP-DR, CP-DR, DP-DR, EP-DR  ; (bMULT=YES)
 D/DY
; [EC8]  : bSYM, bMULT, SUBCOUNT, YS-P1P, YS-P1N, bUSER-D, YD-D1P, YD-D1N,
;        : STIF_METHOD, STIFF-P, STIFF-M, IO-P, LS-P, CP-P, IO-N, LS-N, CP-N, bUSER-RA
TIO
;        : EN-FR, DN-FR, CN-FR, BN-FR, A-FR, BP-FR, CP-FR, DP-FR, EP-FR  ; F/FY or M/M
Y
;        : EN-DR, DN-DR, CN-DR, BN-DR, A-DR, BP-DR, CP-DR, DP-DR, EP-DR  ; D/DY
; [YSDATA] : bSYM-YZ, bSYM-PN, PC0, PMAX,
;          : MY1-P, MY1-N, MY2-P, MY2-N, MZ1-P, MZ1-N, MZ2-P, MZ2-N,
;          : INTPOLATION, ALPHA, bSYM-Y, bSYM-Z, [YSPROP]-1ST,  [YSPROP]-2ND
; [YSPROP] : PY1P, PY2P, PY3P,..., PY10P, PY11P, MY1P, MY2P,..., MY10P, MY11P
;          : PY1N, PY2N, PY3N,..., PY10N, PY11N, MY1N, MY2N,..., MY10N, MY11N
;          : PZ1P, PZ2P, PZ3P,..., PZ10P, PZ11P, MZ1P, MZ2P,..., MZ10P, MZ11P
;          : PZ1N, PZ2N, PZ3N,..., PZ10N, PZ11N, MZ1N, MZ2N,..., MZ10N, MZ11N
  NAME=Maschi MA, Maschi
    BEAM, , MASONRY, PIER, NONE, NO, 0, 0.5, 0.5, 0.5, 0.5, YES
    0, 0, 0, 1, 0, 0.4, 0, NO, NONE
    YES, C, FEMA, USER, \
      D/DY, NO, NO, 1, 1, 1, NO, 0, 0, , ELASTIC, 0, 2, 4, 6, 2, 4, 6, YES, \
```

```
      NO, GENERAL, NO, YES, FULL, NO, NO, NO, ORIGIN_ORIENTED, 0.4, 0.5, ELASTIC, 2000
, 500, 1, 1, \
      -1.75, -1.75, -1.75, -1, 0, 5, 5, 5, 5, \
      -0.2, -0.2, -1, -1, 0, 0, 0, 0, 0
    NO
    YES, C, FEMA, USER, \
      D/DY, YES, NO, 1, 1, 1, NO, 0, 0, , ELASTIC, 0, 2, 4, 6, 2, 4, 6, YES, \
      NO, GENERAL, NO, YES, FULL, NO, NO, NO, ORIGIN_ORIENTED, 0.4, 0.5, ELASTIC, 2000
, 500, 1, 1, \
      -0.006, -0.004, -0.004, -0.001, 0, 0.001, 0.004, 0.004, 0.006, \
      -0.3, -0.3, -1.001, -1, 0, 1, 1.001, 0.3, 0.3
    NO
    YES, IJ, FEMA, USER, YES, \
      D/DY, YES, NO, 1, 1, 1, NO, 0, 0, , 6EI, 0, 2, 4, 6, 2, 4, 6, YES, \
      NO, GENERAL, NO, YES, FULL, NO, NO, NO, ORIGIN_ORIENTED, 0.4, 0.5, ELASTIC, 2000
, 500, 1, 1, \
      -0.009, -0.006, -0.006, -0.001, 0, 0.001, 0.006, 0.006, 0.009, \
      -0.3, -0.3, -1.001, -1, 0, 1, 1.001, 0.3, 0.3, \
      D/DY, YES, NO, 1, 1, 1, NO, 0, 0, , 6EI, 0, 2, 4, 6, 2, 4, 6, YES, \
      NO, GENERAL, NO, YES, FULL, NO, NO, NO, ORIGIN_ORIENTED, 0.4, 0.5, ELASTIC, 2000
, 500, 1, 1, \
      -0.009, -0.006, -0.006, -0.001, 0, 0.001, 0.006, 0.006, 0.009, \
      -0.3, -0.3, -1.001, -1, 0, 1, 1.001, 0.3, 0.3
    NO
    EXIST, 2560, 67, 0.85
  NAME=Pilastri c.a.,
    BEAM, , RC, MTHETA, PMM, NO, 0, 0.5, 0.5, 0.5, 0.5, YES
    0, 0, 0, 1, 0, 0.4, 0, NO, NONE
    YES, IJ, EC8, AUTO, YES, \
      D/DY, NO, NO, 1, 1, 1, NO, 1, 1, 1, ELASTIC, 0, 0, 1.25, 4, 6, 1, 1, 1, NO, \
      NO, GENERAL, NO, YES, FULL, NO, NO, NO, ORIGIN_ORIENTED, 0.4, 0.5, ELASTIC, 2000
, 500, 1, 1, \
      -8, -1.01, -1.01, -1, 0, 1, 6, 6, 8, \
      -0.2, -0.2, -1, -1, 0, 1, 1.001, 0.2, 0.2, \
      D/DY, NO, NO, 1, 1, 1, NO, 1, 1, 1, ELASTIC, 0, 0, 1.25, 4, 6, 1, 1, 1, NO, \
      NO, GENERAL, NO, YES, FULL, NO, NO, NO, ORIGIN_ORIENTED, 0.4, 0.5, ELASTIC, 2000
, 500, 1, 1, \
      -8, -1.01, -1.01, -1, 0, 1, 6, 6, 8, \
      -0.2, -0.2, -1, -1, 0, 1, 1.001, 0.2, 0.2
    YES, IJ, EC8, AUTO, YES, \
      D/DY, NO, NO, 1, 1, 1, NO, 1, 1, , ELASTIC, 0, 0, 1, 1, 1, 1, 1, 1, NO, \
      NO, GENERAL, NO, YES, FULL, NO, NO, NO, ORIGIN_ORIENTED, 0.4, 0.5, ELASTIC, 2000
, 500, 1, 1, \
      -8, -1.01, -1.01, -1, 0, 1, 1.01, 1.01, 8, \
      -0.2, -0.2, -1, -1, 0, 1, 1, 0.2, 0.2, \
      D/DY, NO, NO, 1, 1, 1, NO, 1, 1, , ELASTIC, 0, 0, 1, 1, 1, 1, 1, 1, NO, \
      NO, GENERAL, NO, YES, FULL, NO, NO, NO, ORIGIN_ORIENTED, 0.4, 0.5, ELASTIC, 2000
, 500, 1, 1, \
      -8, -1.01, -1.01, -1, 0, 1, 1.01, 1.01, 8, \
      -0.2, -0.2, -1, -1, 0, 1, 1, 0.2, 0.2
    YES, IJ, EC8, AUTO, YES, \
      D/DY, NO, NO, 1, 1, 1, NO, 1, 1, , ELASTIC, 0, 0, 1, 1, 1, 1, 1, 1, NO, \
      NO, GENERAL, NO, YES, FULL, NO, NO, NO, ORIGIN_ORIENTED, 0.4, 0.5, ELASTIC, 2000
, 500, 1, 1, \
      -8, -1.01, -1.01, -1, 0, 1, 1.01, 1.01, 8, \
      -0.2, -0.2, -1, -1, 0, 1, 1, 0.2, 0.2, \
      D/DY, NO, NO, 1, 1, 1, NO, 1, 1, , ELASTIC, 0, 0, 1, 1, 1, 1, 1, 1, NO, \
      NO, GENERAL, NO, YES, FULL, NO, NO, NO, ORIGIN_ORIENTED, 0.4, 0.5, ELASTIC, 2000
, 500, 1, 1, \
      -8, -1.01, -1.01, -1, 0, 1, 1.01, 1.01, 8, \
      -0.2, -0.2, -1, -1, 0, 1, 1, 0.2, 0.2
    NO
```

```
    YES, IJ, EC8, AUTO, YES, \
      D/DY, NO, NO, 1, 1, 1, NO, 1, 1, 1, 6EI, 1, 1, 1, 0.75, 1, 1, 0.75, 1, NO, \
      NO, GENERAL, NO, YES, FULL, NO, NO, NO, ORIGIN_ORIENTED, 0.4, 0.5, ELASTIC, 2000
, 500, 1, 1, \
      -12, -9, -9, -1, 0, 1, 9, 9, 12, \
      -0.2, -0.2, -1.001, -1, 0, 1, 1.001, 0.2, 0.2, \
      D/DY, NO, NO, 1, 1, 1, NO, 1, 1, 1, 6EI, 1, 1, 1, 0.75, 1, 1, 0.75, 1, NO, \
      NO, GENERAL, NO, YES, FULL, NO, NO, NO, ORIGIN_ORIENTED, 0.4, 0.5, ELASTIC, 2000
, 500, 1, 1, \
      -12, -9, -9, -1, 0, 1, 9, 9, 12, \
      -0.2, -0.2, -1.001, -1, 0, 1, 1.001, 0.2, 0.2
    YES, IJ, EC8, AUTO, YES, \
      D/DY, NO, NO, 1, 1, 1, NO, 1, 1, 1, 6EI, 1, 1, 1, 0.75, 1, 1, 0.75, 1, NO, \
      NO, GENERAL, NO, YES, FULL, NO, NO, NO, ORIGIN_ORIENTED, 0.4, 0.5, ELASTIC, 2000
, 500, 1, 1, \
      -12, -9, -9, -1, 0, 1, 9, 9, 12, \
      -0.2, -0.2, -1.001, -1, 0, 1, 1.001, 0.2, 0.2, \
      D/DY, NO, NO, 1, 1, 1, NO, 1, 1, 1, 6EI, 1, 1, 1, 0.75, 1, 1, 0.75, 1, NO, \
      NO, GENERAL, NO, YES, FULL, NO, NO, NO, ORIGIN_ORIENTED, 0.4, 0.5, ELASTIC, 2000
, 500, 1, 1, \
      -12, -9, -9, -1, 0, 1, 9, 9, 12, \
      -0.2, -0.2, -1.001, -1, 0, 1, 1.001, 0.2, 0.2
    AUTO, YES, NO, YES, 0.5, 1, 0.5, 0.5, 1, 1, 0.5, 0.5, 1, 1, ELLIPSE, 2, YES, YES,
\
      1, 0.8, 0.6, 0.4, 0.2, 0, -0.2, -0.4, -0.6, -0.8, -1, 0, 0.3, 0.6, 0.8, 0.9, 1,
0.9, 0.8, 0.6, 0.3, 0, \
      1, 0.8, 0.6, 0.4, 0.2, 0, -0.2, -0.4, -0.6, -0.8, -1, -0, -0.3, -0.6, -0.8, -0.9
, -1, -0.9, -0.8, -0.6, -0.3, -0, \
      1, 0.8, 0.6, 0.4, 0.2, 0, -0.2, -0.4, -0.6, -0.8, -1, 0, 0.3, 0.6, 0.8, 0.9, 1,
0.9, 0.8, 0.6, 0.3, 0, \
      1, 0.8, 0.6, 0.4, 0.2, 0, -0.2, -0.4, -0.6, -0.8, -1, -0, -0.3, -0.6, -0.8, -0.9
, -1, -0.9, -0.8, -0.6, -0.3, -0, \
      1, 0.8, 0.6, 0.4, 0.2, 0, -0.2, -0.4, -0.6, -0.8, -1, 0, 0.3, 0.6, 0.8, 0.9, 1,
0.9, 0.8, 0.6, 0.3, 0, \
      1, 0.8, 0.6, 0.4, 0.2, 0, -0.2, -0.4, -0.6, -0.8, -1, -0, -0.3, -0.6, -0.8, -0.9
, -1, -0.9, -0.8, -0.6, -0.3, -0, \
      1, 0.8, 0.6, 0.4, 0.2, 0, -0.2, -0.4, -0.6, -0.8, -1, 0, 0.3, 0.6, 0.8, 0.9, 1,
0.9, 0.8, 0.6, 0.3, 0, \
      1, 0.8, 0.6, 0.4, 0.2, 0, -0.2, -0.4, -0.6, -0.8, -1, -0, -0.3, -0.6, -0.8, -0.9
, -1, -0.9, -0.8, -0.6, -0.3, -0 , \
      NO, YES, 0.5, 1, 0.5, 0.5, 1, 1, 0.5, 0.5, 1, 1, ELLIPSE, 2, YES, YES, \
      1, 0.8, 0.6, 0.4, 0.2, 0, -0.2, -0.4, -0.6, -0.8, -1, 0, 0.3, 0.6, 0.8, 0.9, 1,
0.9, 0.8, 0.6, 0.3, 0, \
      1, 0.8, 0.6, 0.4, 0.2, 0, -0.2, -0.4, -0.6, -0.8, -1, -0, -0.3, -0.6, -0.8, -0.9
, -1, -0.9, -0.8, -0.6, -0.3, -0, \
      1, 0.8, 0.6, 0.4, 0.2, 0, -0.2, -0.4, -0.6, -0.8, -1, 0, 0.3, 0.6, 0.8, 0.9, 1,
0.9, 0.8, 0.6, 0.3, 0, \
      1, 0.8, 0.6, 0.4, 0.2, 0, -0.2, -0.4, -0.6, -0.8, -1, -0, -0.3, -0.6, -0.8, -0.9
, -1, -0.9, -0.8, -0.6, -0.3, -0, \
      1, 0.8, 0.6, 0.4, 0.2, 0, -0.2, -0.4, -0.6, -0.8, -1, 0, 0.3, 0.6, 0.8, 0.9, 1,
0.9, 0.8, 0.6, 0.3, 0, \
      1, 0.8, 0.6, 0.4, 0.2, 0, -0.2, -0.4, -0.6, -0.8, -1, -0, -0.3, -0.6, -0.8, -0.9
, -1, -0.9, -0.8, -0.6, -0.3, -0, \
      1, 0.8, 0.6, 0.4, 0.2, 0, -0.2, -0.4, -0.6, -0.8, -1, 0, 0.3, 0.6, 0.8, 0.9, 1,
0.9, 0.8, 0.6, 0.3, 0, \
      1, 0.8, 0.6, 0.4, 0.2, 0, -0.2, -0.4, -0.6, -0.8, -1, -0, -0.3, -0.6, -0.8, -0.9
, -1, -0.9, -0.8, -0.6, -0.3, -0
  NAME=Pilastri fitt MA, Pilastri fitt
    BEAM, , MASONRY, PIER, NONE, NO, 0, 0.5, 0.5, 0.5, 0.5, YES
    0, 0, 0, 1, 0, 0.4, 0, NO, NONE
    YES, C, FEMA, USER, \
      D/DY, NO, NO, 1, 1, 1, NO, 0, 0, , ELASTIC, 0, 2, 4, 6, 2, 4, 6, YES, \
```

```
      NO, GENERAL, NO, YES, FULL, NO, NO, NO, ORIGIN_ORIENTED, 0.4, 0.5, ELASTIC, 2000
, 500, 1, 1, \
      -1.75, -1.75, -1.75, -1, 0, 5, 5, 5, 5, \
      -0.2, -0.2, -1, -1, 0, 0, 0, 0, 0
    NO
    NO
    NO
    NO
    NO
    EXIST, 2560, 67, 0.85
  NAME=Fasce MA, Fasce
    BEAM, , MASONRY, SPAN, NONE, NO, 0, 0.5, 0.5, 0.5, 0.5, YES
    0, 0, 0, 1, 0, 0.4, 0, NO, NONE
    YES, C, FEMA, USER, \
      D/DY, NO, NO, 1, 1, 1, NO, 0, 0, , ELASTIC, 0, 2, 4, 6, 2, 4, 6, YES, \
      NO, GENERAL, NO, YES, FULL, NO, NO, NO, ORIGIN_ORIENTED, 0.4, 0.5, ELASTIC, 2000
, 500, 1, 1, \
      -1.75, -1.75, -1.75, -1, 0, 5, 5, 5, 5, \
      -0.2, -0.2, -1, -1, 0, 0, 0, 0, 0
    NO
    YES, C, FEMA, USER, \
      D/DY, YES, NO, 1, 1, 1, NO, 0, 0, , ELASTIC, 0, 2, 4, 6, 2, 4, 6, YES, \
      NO, GENERAL, NO, YES, FULL, NO, NO, NO, ORIGIN_ORIENTED, 0.4, 0.5, ELASTIC, 2000
, 500, 1, 1, \
      -0.006, -0.004, -0.004, -0.001, 0, 0.001, 0.004, 0.004, 0.006, \
      -0.3, -0.3, -1.001, -1, 0, 1, 1.001, 0.3, 0.3
    NO
    YES, IJ, FEMA, USER, YES, \
      D/DY, YES, NO, 1, 1, 1, NO, 0, 0, , 6EI, 0, 2, 4, 6, 2, 4, 6, YES, \
      NO, GENERAL, NO, YES, FULL, NO, NO, NO, ORIGIN_ORIENTED, 0.4, 0.5, ELASTIC, 2000
, 500, 1, 1, \
      -0.012, -0.008, -0.008, -0.001, 0, 0.001, 0.008, 0.008, 0.012, \
      -0.3, -0.3, -1.001, -1, 0, 1, 1.001, 0.3, 0.3, \
      D/DY, YES, NO, 1, 1, 1, NO, 0, 0, , 6EI, 0, 2, 4, 6, 2, 4, 6, YES, \
      NO, GENERAL, NO, YES, FULL, NO, NO, NO, ORIGIN_ORIENTED, 0.4, 0.5, ELASTIC, 2000
, 500, 1, 1, \
      -0.012, -0.008, -0.008, -0.001, 0, 0.001, 0.008, 0.008, 0.012, \
      -0.3, -0.3, -1.001, -1, 0, 1, 1.001, 0.3, 0.3
    NO
    2560, 67, 80
  NAME=Maschi MB, Maschi
    BEAM, , MASONRY, PIER, NONE, NO, 0, 0.5, 0.5, 0.5, 0.5, YES
    0, 0, 0, 1, 0, 0.4, 0, NO, NONE
    YES, C, FEMA, USER, \
      D/DY, NO, NO, 1, 1, 1, NO, 0, 0, , ELASTIC, 0, 2, 4, 6, 2, 4, 6, YES, \
      NO, GENERAL, NO, YES, FULL, NO, NO, NO, ORIGIN_ORIENTED, 0.4, 0.5, ELASTIC, 2000
, 500, 1, 1, \
      -1.75, -1.75, -1.75, -1, 0, 5, 5, 5, 5, \
      -0.2, -0.2, -1, -1, 0, 0, 0, 0, 0
    NO
    YES, C, FEMA, USER, \
      D/DY, YES, NO, 1, 1, 1, NO, 0, 0, , ELASTIC, 0, 2, 4, 6, 2, 4, 6, YES, \
      NO, GENERAL, NO, YES, FULL, NO, NO, NO, ORIGIN_ORIENTED, 0.4, 0.5, ELASTIC, 2000
, 500, 1, 1, \
      -0.006, -0.004, -0.004, -0.001, 0, 0.001, 0.004, 0.004, 0.006, \
      -0.3, -0.3, -1.001, -1, 0, 1, 1.001, 0.3, 0.3
    NO
    YES, IJ, FEMA, USER, YES, \
      D/DY, YES, NO, 1, 1, 1, NO, 0, 0, , 6EI, 0, 2, 4, 6, 2, 4, 6, YES, \
      NO, GENERAL, NO, YES, FULL, NO, NO, NO, ORIGIN_ORIENTED, 0.4, 0.5, ELASTIC, 2000
, 500, 1, 1, \
      -0.009, -0.006, -0.006, -0.001, 0, 0.001, 0.006, 0.006, 0.009, \
```

```
      -0.3, -0.3, -1.001, -1, 0, 1, 1.001, 0.3, 0.3, \
      D/DY, YES, NO, 1, 1, 1, NO, 0, 0, , 6EI, 0, 2, 4, 6, 2, 4, 6, YES, \
      NO, GENERAL, NO, YES, FULL, NO, NO, NO, ORIGIN_ORIENTED, 0.4, 0.5, ELASTIC, 2000
, 500, 1, 1, \
      -0.009, -0.006, -0.006, -0.001, 0, 0.001, 0.006, 0.006, 0.009, \
      -0.3, -0.3, -1.001, -1, 0, 1, 1.001, 0.3, 0.3
    NO
    EXIST, 3700, 259, 0.85
  NAME=Pilastri fitt MB, Pilastri fitt
    BEAM, , MASONRY, PIER, NONE, NO, 0, 0.5, 0.5, 0.5, 0.5, YES
    0, 0, 0, 1, 0, 0.4, 0, NO, NONE
    YES, C, FEMA, USER, \
      D/DY, NO, NO, 1, 1, 1, NO, 0, 0, , ELASTIC, 0, 2, 4, 6, 2, 4, 6, YES, \
      NO, GENERAL, NO, YES, FULL, NO, NO, NO, ORIGIN_ORIENTED, 0.4, 0.5, ELASTIC, 2000
, 500, 1, 1, \
      -1.75, -1.75, -1.75, -1, 0, 5, 5, 5, 5, \
      -0.2, -0.2, -1, -1, 0, 0, 0, 0, 0
    NO
    NO
    NO
    NO
    NO
    EXIST, 3700, 259, 0.85
  NAME=Fasce MB, Fasce
    BEAM, , MASONRY, SPAN, NONE, NO, 0, 0.5, 0.5, 0.5, 0.5, YES
    0, 0, 0, 1, 0, 0.4, 0, NO, NONE
    YES, C, FEMA, USER, \
      D/DY, NO, NO, 1, 1, 1, NO, 0, 0, , ELASTIC, 0, 2, 4, 6, 2, 4, 6, YES, \
      NO, GENERAL, NO, YES, FULL, NO, NO, NO, ORIGIN_ORIENTED, 0.4, 0.5, ELASTIC, 2000
, 500, 1, 1, \
      -1.75, -1.75, -1.75, -1, 0, 5, 5, 5, 5, \
      -0.2, -0.2, -1, -1, 0, 0, 0, 0, 0
    NO
    YES, C, FEMA, USER, \
      D/DY, YES, NO, 1, 1, 1, NO, 0, 0, , ELASTIC, 0, 2, 4, 6, 2, 4, 6, YES, \
      NO, GENERAL, NO, YES, FULL, NO, NO, NO, ORIGIN_ORIENTED, 0.4, 0.5, ELASTIC, 2000
, 500, 1, 1, \
      -0.006, -0.004, -0.004, -0.001, 0, 0.001, 0.004, 0.004, 0.006, \
      -0.3, -0.3, -1.001, -1, 0, 1, 1.001, 0.3, 0.3
    NO
    YES, IJ, FEMA, USER, YES, \
      D/DY, YES, NO, 1, 1, 1, NO, 0, 0, , 6EI, 0, 2, 4, 6, 2, 4, 6, YES, \
      NO, GENERAL, NO, YES, FULL, NO, NO, NO, ORIGIN_ORIENTED, 0.4, 0.5, ELASTIC, 2000
, 500, 1, 1, \
      -0.012, -0.008, -0.008, -0.001, 0, 0.001, 0.008, 0.008, 0.012, \
      -0.3, -0.3, -1.001, -1, 0, 1, 1.001, 0.3, 0.3, \
      D/DY, YES, NO, 1, 1, 1, NO, 0, 0, , 6EI, 0, 2, 4, 6, 2, 4, 6, YES, \
      NO, GENERAL, NO, YES, FULL, NO, NO, NO, ORIGIN_ORIENTED, 0.4, 0.5, ELASTIC, 2000
, 500, 1, 1, \
      -0.012, -0.008, -0.008, -0.001, 0, 0.001, 0.008, 0.008, 0.012, \
      -0.3, -0.3, -1.001, -1, 0, 1, 1.001, 0.3, 0.3
    NO
    3700, 259, 80
  NAME=Maschi MA int, Maschi
    BEAM, , MASONRY, PIER, NONE, NO, 0, 0.5, 0.5, 0.5, 0.5, YES
    0, 0, 0, 1, 0, 0.4, 0, NO, NONE
    YES, C, FEMA, USER, \
      D/DY, NO, NO, 1, 1, 1, NO, 0, 0, , ELASTIC, 0, 2, 4, 6, 2, 4, 6, YES, \
      NO, GENERAL, NO, YES, FULL, NO, NO, NO, ORIGIN_ORIENTED, 0.4, 0.5, ELASTIC, 2000
, 500, 1, 1, \
      -1.75, -1.75, -1.75, -1, 0, 5, 5, 5, 5, \
      -0.2, -0.2, -1, -1, 0, 0, 0, 0, 0
```

```
    NO
    YES, C, FEMA, USER, \
      D/DY, YES, NO, 1, 1, 1, NO, 0, 0, , ELASTIC, 0, 2, 4, 6, 2, 4, 6, YES, \
      NO, GENERAL, NO, YES, FULL, NO, NO, NO, ORIGIN_ORIENTED, 0.4, 0.5, ELASTIC, 2000
, 500, 1, 1, \
      -0.006, -0.004, -0.004, -0.001, 0, 0.001, 0.004, 0.004, 0.006, \
      -0.3, -0.3, -1.001, -1, 0, 1, 1.001, 0.3, 0.3
    NO
    YES, IJ, FEMA, USER, YES, \
      D/DY, YES, NO, 1, 1, 1, NO, 0, 0, , 6EI, 0, 2, 4, 6, 2, 4, 6, YES, \
      NO, GENERAL, NO, YES, FULL, NO, NO, NO, ORIGIN_ORIENTED, 0.4, 0.5, ELASTIC, 2000
, 500, 1, 1, \
      -0.009, -0.006, -0.006, -0.001, 0, 0.001, 0.006, 0.006, 0.009, \
      -0.3, -0.3, -1.001, -1, 0, 1, 1.001, 0.3, 0.3, \
      D/DY, YES, NO, 1, 1, 1, NO, 0, 0, , 6EI, 0, 2, 4, 6, 2, 4, 6, YES, \
      NO, GENERAL, NO, YES, FULL, NO, NO, NO, ORIGIN_ORIENTED, 0.4, 0.5, ELASTIC, 2000
, 500, 1, 1, \
      -0.009, -0.006, -0.006, -0.001, 0, 0.001, 0.006, 0.006, 0.009, \
      -0.3, -0.3, -1.001, -1, 0, 1, 1.001, 0.3, 0.3
    NO
    EXIST, 3840, 100.5, 0.85

*HINGE-ASSIGN    ; Assign Pushover Hinge
; TYPE=TYPE_NAME, ELEM_NO(GLINK_NO), HINGE_TYP, FIBER_KEY  ; 1st line
  TYPE=BEAM, 3, Maschi MA int, 0
  TYPE=BEAM, 6, Maschi MA, 0
  TYPE=BEAM, 7, Maschi MA, 0
  TYPE=BEAM, 13, Maschi MA, 0
  TYPE=BEAM, 14, Maschi MA, 0
  TYPE=BEAM, 20, Maschi MA, 0
  TYPE=BEAM, 21, Maschi MA, 0
  TYPE=BEAM, 22, Maschi MA, 0
  TYPE=BEAM, 23, Maschi MA, 0
  TYPE=BEAM, 25, Maschi MB, 0
  TYPE=BEAM, 28, Maschi MB, 0
  TYPE=BEAM, 29, Maschi MB, 0
  TYPE=BEAM, 31, Maschi MA, 0
  TYPE=BEAM, 32, Maschi MB, 0
  TYPE=BEAM, 35, Maschi MA, 0
  TYPE=BEAM, 36, Maschi MA, 0
  TYPE=BEAM, 37, Maschi MA, 0
  TYPE=BEAM, 38, Maschi MA, 0
  TYPE=BEAM, 41, Pilastri fitt MA, 0
  TYPE=BEAM, 2000, Pilastri fitt MB, 0
  TYPE=BEAM, 2004, Pilastri fitt MA, 0
  TYPE=BEAM, 2005, Pilastri fitt MA, 0
  TYPE=BEAM, 2008, Pilastri fitt MA, 0
  TYPE=BEAM, 2009, Pilastri fitt MA, 0
  TYPE=BEAM, 2011, Pilastri fitt MA, 0
  TYPE=BEAM, 2012, Pilastri fitt MA, 0
  TYPE=BEAM, 6098, Pilastri c.a., 0
  TYPE=BEAM, 6099, Pilastri c.a., 0
  TYPE=BEAM, 6104, Pilastri fitt MA, 0
  TYPE=BEAM, 6107, Maschi MA, 0
  TYPE=BEAM, 6159, Fasce MB, 0
  TYPE=BEAM, 6161, Fasce MB, 0
  TYPE=BEAM, 6169, Fasce MB, 0
  TYPE=BEAM, 6174, Maschi MA, 0
  TYPE=BEAM, 6184, Maschi MA, 0
  TYPE=BEAM, 6195, Fasce MA, 0
  TYPE=BEAM, 6197, Fasce MA, 0
  TYPE=BEAM, 6200, Fasce MA, 0
```

```
  TYPE=BEAM, 6201, Fasce MA, 0
  TYPE=BEAM, 6203, Fasce MA, 0
  TYPE=BEAM, 6213, Fasce MA, 0
  TYPE=BEAM, 6215, Fasce MA, 0
  TYPE=BEAM, 6218, Maschi MB, 0
  TYPE=BEAM, 6221, Pilastri c.a., 0
  TYPE=BEAM, 6222, Pilastri c.a., 0

*PUSHOVER-LOAD   ; Pushover Load Cases
; NAME=NAME, DESC,                                      ; 1st line
; STEP, bUSEINILOAD, bPDELTA, METHOD, bREAC, bDISP  ; 2nd line
; CTRL_OPT, INC_FUNCTION, ANAL_RATIO                    ; 3rd line (METHOD=LOAD)
; CTRL_OPT, DISPL                                       ; 3rd line (METHOD=DISP, CTRL_OPT=
GLOBAL)
; CTRL_OPT, MNODE, DIR, DISPL                           ; 3rd line (METHOD=DISP, CTRL_OPT=
MNODE)
; bANAL_LIMIT, VALUE, LOAD_PATTERN                      ; 4th line
; DIR, SCALE                                            ; 5th line (LOAD_PATTERN=UNIFORM)
; MODE, SCALE                                           ; 5th line (LOAD_PATTERN=MODE)
; LCNAME1, SCALE1, LCNAME2, SCALE2, ...                 ; from 5th line (LOAD_PATTERN=STAT
IC)
   NAME=GU1 +X,
        200, YES, NO, DISP, YES, NO, NO, 20
        MNODE, 180, DX, 0.03
        NO, 10, STATIC, YES, NO, NO, 10, 10
        SISMA X, 1
   NAME=GU1 -X,
        200, YES, NO, DISP, YES, NO, NO, 20
        MNODE, 180, DX, -0.03
        NO, 10, STATIC, YES, NO, NO, 10, 10
        SISMA X, -1
   NAME=GU1 +Y,
        200, YES, NO, DISP, YES, NO, NO, 20
        MNODE, 180, DY, 0.03
        NO, 10, STATIC, YES, NO, NO, 10, 10
        SISMA Y, 1
   NAME=GU1 -Y,
        500, YES, NO, DISP, YES, NO, NO, 20
        MNODE, 183, DY, -0.03
        NO, 10, STATIC, YES, NO, NO, 10, 10
        SISMA Y, -1
   NAME=GU2 +X,
        200, YES, NO, DISP, YES, NO, NO, 20
        MNODE, 180, DX, 0.045
        NO, 10, UNIFORM, YES, NO, NO, 10, 10
        DX, 1
   NAME=GU2 -X,
        200, YES, NO, DISP, YES, NO, NO, 20
        MNODE, 180, DX, -0.045
        NO, 10, UNIFORM, YES, NO, NO, 10, 10
        DX, -1
   NAME=GU2 +Y,
        200, YES, NO, DISP, YES, NO, NO, 20
        MNODE, 180, DY, 0.03
        NO, 10, UNIFORM, YES, NO, NO, 10, 10
        DY, 1
   NAME=GU2 -Y,
        200, YES, NO, DISP, YES, NO, NO, 20
        MNODE, 183, DY, -0.03
        NO, 10, UNIFORM, YES, NO, NO, 10, 10
        DY, -1
```

```
*LOADCOMB    ; Combinations
; NAME=NAME, KIND, ACTIVE, bES, iTYPE, DESC, iSERV-TYPE, nLCOMTYPE   ; line 1
;      ANAL1, LCNAME1, FACT1, ...                                     ; from line 2
   NAME=SISMA V, CONC, STRENGTH, 0, 0, , 0, 0
        ST, PP, 1, ST, G1+G2 copertura A, 3.7, ST, G1+G2 copertura B, 1.5
        ST, Q sottotetto, 0.3, ST, sporto gronda, 2, ST, travi, 3
        ST, parapetto, 1.5, ST, muro, 4.6
   NAME=sisma_1, CONC, STRENGTH, 0, 0, , 0, 0
        RS, sisma_x, 1, RS, sisma_y, 0.3, ES, sisma_x, 1, ES, sisma_y, 0.3
        CBC, SISMA V, 1
   NAME=sisma_2, CONC, STRENGTH, 0, 0, , 0, 0
        RS, sisma_x, 1, RS, sisma_y, 0.3, ES, sisma_x, 1, ES, sisma_y, -0.3
        CBC, SISMA V, 1
   NAME=sisma_3, CONC, STRENGTH, 0, 0, , 0, 0
        RS, sisma_x, 1, RS, sisma_y, 0.3, ES, sisma_x, -1, ES, sisma_y, 0.3
        CBC, SISMA V, 1
   NAME=sisma_4, CONC, STRENGTH, 0, 0, , 0, 0
        RS, sisma_x, 1, RS, sisma_y, 0.3, ES, sisma_x, -1, ES, sisma_y, -0.3
        CBC, SISMA V, 1
   NAME=sisma_5, CONC, STRENGTH, 0, 0, , 0, 0
        RS, sisma_x, 1, RS, sisma_y, -0.3, ES, sisma_x, 1, ES, sisma_y, 0.3
        CBC, SISMA V, 1
   NAME=sisma_6, CONC, STRENGTH, 0, 0, , 0, 0
        RS, sisma_x, 1, RS, sisma_y, -0.3, ES, sisma_x, 1, ES, sisma_y, -0.3
        CBC, SISMA V, 1
   NAME=sisma_7, CONC, STRENGTH, 0, 0, , 0, 0
        RS, sisma_x, 1, RS, sisma_y, -0.3, ES, sisma_x, -1, ES, sisma_y, 0.3
        CBC, SISMA V, 1
   NAME=sisma_8, CONC, STRENGTH, 0, 0, , 0, 0
        RS, sisma_x, 1, RS, sisma_y, -0.3, ES, sisma_x, -1, ES, sisma_y, -0.3
        CBC, SISMA V, 1
   NAME=sisma_9, CONC, STRENGTH, 0, 0, , 0, 0
        RS, sisma_x, -1, RS, sisma_y, 0.3, ES, sisma_x, 1, ES, sisma_y, 0.3
        CBC, SISMA V, 1
   NAME=sisma 10, CONC, STRENGTH, 0, 0, , 0, 0
        RS, sisma_x, -1, RS, sisma_y, 0.3, ES, sisma_x, 1, ES, sisma_y, -0.3
        CBC, SISMA V, 1
   NAME=sisma_11, CONC, STRENGTH, 0, 0, , 0, 0
        RS, sisma_x, -1, RS, sisma_y, 0.3, ES, sisma_x, -1, ES, sisma_y, 0.3
        CBC, SISMA V, 1
   NAME=sisma 12, CONC, STRENGTH, 0, 0, , 0, 0
        RS, sisma_x, -1, RS, sisma_y, 0.3, ES, sisma_x, -1, ES, sisma_y, -0.3
        CBC, SISMA V, 1
   NAME=sisma_13, CONC, STRENGTH, 0, 0, , 0, 0
        RS, sisma_x, -1, RS, sisma_y, -0.3, ES, sisma_x, 1, ES, sisma_y, 0.3
        CBC, SISMA V, 1
   NAME=sisma_14, CONC, STRENGTH, 0, 0, , 0, 0
        RS, sisma_x, -1, RS, sisma_y, -0.3, ES, sisma_x, 1, ES, sisma_y, -0.3
        CBC, SISMA V, 1
   NAME=sisma_15, CONC, STRENGTH, 0, 0, , 0, 0
        RS, sisma_x, -1, RS, sisma_y, -0.3, ES, sisma_x, -1, ES, sisma_y, 0.3
        CBC, SISMA V, 1
   NAME=sisma_16, CONC, STRENGTH, 0, 0, , 0, 0
        RS, sisma_x, -1, RS, sisma_y, -0.3, ES, sisma_x, -1, ES, sisma_y, -0.3
        CBC, SISMA V, 1
   NAME=sisma_17, CONC, STRENGTH, 0, 0, , 0, 0
        RS, sisma_x, 0.3, RS, sisma_y, 1, ES, sisma_x, 0.3, ES, sisma_y, 1
        CBC, SISMA V, 1
   NAME=sisma_18, CONC, STRENGTH, 0, 0, , 0, 0
        RS, sisma_x, 0.3, RS, sisma_y, 1, ES, sisma_x, -0.3, ES, sisma_y, 1
        CBC, SISMA V, 1
   NAME=sisma_19, CONC, STRENGTH, 0, 0, , 0, 0
```

```
      RS, sisma_x, 0.3, RS, sisma_y, 1, ES, sisma_x, 0.3, ES, sisma_y, -1
      CBC, SISMA V, 1
NAME=sisma_20, CONC, STRENGTH, 0, 0, , 0, 0
      RS, sisma_x, 0.3, RS, sisma_y, 1, ES, sisma_x, -0.3, ES, sisma_y, -1
      CBC, SISMA V, 1
NAME=sisma_21, CONC, STRENGTH, 0, 0, , 0, 0
      RS, sisma_x, -0.3, RS, sisma_y, 1, ES, sisma_x, 0.3, ES, sisma_y, 1
      CBC, SISMA V, 1
NAME=sisma_22, CONC, STRENGTH, 0, 0, , 0, 0
      RS, sisma_x, -0.3, RS, sisma_y, 1, ES, sisma_x, -0.3, ES, sisma_y, 1
      CBC, SISMA V, 1
NAME=sisma_23, CONC, STRENGTH, 0, 0, , 0, 0
      RS, sisma_x, -0.3, RS, sisma_y, 1, ES, sisma_x, 0.3, ES, sisma_y, -1
      CBC, SISMA V, 1
NAME=sisma_24, CONC, STRENGTH, 0, 0, , 0, 0
      RS, sisma_x, -0.3, RS, sisma_y, 1, ES, sisma_x, -0.3, ES, sisma_y, -1
      CBC, SISMA V, 1
NAME=sisma_25, CONC, STRENGTH, 0, 0, , 0, 0
      RS, sisma_x, 0.3, RS, sisma_y, -1, ES, sisma_x, 0.3, ES, sisma_y, 1
      CBC, SISMA V, 1
NAME=sisma_26, CONC, STRENGTH, 0, 0, , 0, 0
      RS, sisma_x, 0.3, RS, sisma_y, -1, ES, sisma_x, -0.3, ES, sisma_y, 1
      CBC, SISMA V, 1
NAME=sisma_27, CONC, STRENGTH, 0, 0, , 0, 0
      RS, sisma_x, 0.3, RS, sisma_y, -1, ES, sisma_x, 0.3, ES, sisma_y, -1
      CBC, SISMA V, 1
NAME=sisma_28, CONC, STRENGTH, 0, 0, , 0, 0
      RS, sisma_x, 0.3, RS, sisma_y, -1, ES, sisma_x, -0.3, ES, sisma_y, -1
      CBC, SISMA V, 1
NAME=sisma_29, CONC, STRENGTH, 0, 0, , 0, 0
      RS, sisma_x, -0.3, RS, sisma_y, -1, ES, sisma_x, 0.3, ES, sisma_y, 1
      CBC, SISMA V, 1
NAME=sisma_30, CONC, STRENGTH, 0, 0, , 0, 0
      RS, sisma_x, -0.3, RS, sisma_y, -1, ES, sisma_x, -0.3, ES, sisma_y, 1
      CBC, SISMA V, 1
NAME=sisma_31, CONC, STRENGTH, 0, 0, , 0, 0
      RS, sisma_x, -0.3, RS, sisma_y, -1, ES, sisma_x, 0.3, ES, sisma_y, -1
      CBC, SISMA V, 1
NAME=sisma_32, CONC, STRENGTH, 0, 0, , 0, 0
      RS, sisma_x, -0.3, RS, sisma_y, -1, ES, sisma_x, -0.3, ES, sisma_y, -1
      CBC, SISMA V, 1
NAME=ENVELOPE, CONC, SPECIAL, 0, 1, , 0, 0
      CBC, sisma_1, 1, CBC, sisma_2, 1, CBC, sisma_3, 1, CBC, sisma_4, 1
      CBC, sisma_5, 1, CBC, sisma_6, 1, CBC, sisma_7, 1, CBC, sisma_8, 1
      CBC, sisma_9, 1, CBC, sisma_10, 1, CBC, sisma_11, 1, CBC, sisma_12, 1
      CBC, sisma_13, 1, CBC, sisma_14, 1, CBC, sisma_15, 1, CBC, sisma_16, 1
      CBC, sisma_17, 1, CBC, sisma_18, 1, CBC, sisma_19, 1, CBC, sisma_20, 1
      CBC, sisma_21, 1, CBC, sisma_22, 1, CBC, sisma_23, 1, CBC, sisma_24, 1
      CBC, sisma_25, 1, CBC, sisma_26, 1, CBC, sisma_27, 1, CBC, sisma_28, 1
      CBC, sisma_29, 1, CBC, sisma_30, 1, CBC, sisma_31, 1, CBC, sisma_32, 1
NAME=SLU, CONC, INACTIVE, 0, 0, , 0, 0
      ST, PP, 1.3, ST, G1+G2 copertura A, 4.81, ST, G1+G2 copertura B, 1.95
      ST, Q sottotetto, 0.75, ST, sporto gronda, 2.6, ST, Q neve, 1.86
      ST, travi, 3.9, ST, parapetto, 2.25, ST, muro, 5.98

*LC-COLOR    ; Diagram Color for Load Case
; ANAL, LCNAME, iR1(ALL), iG1(ALL), iB1(ALL), iR2(MIN), iG2(MIN), iB2(MIN), iR3(MAX),
iG2(MAX), iB2(MAX)
 ST, parapetto, 0, 128, 57, 192, 0, 128, 192, 0, 128
 ST, PP, 78, 0, 255, 255, 160, 255, 163, 255, 160
 PO, GU1 +X, 210, 210, 210, 163, 160, 255, 192, 192, 192
 PO, GU1 -X, 255, 255, 255, 0, 192, 128, 255, 192, 87
```

```
 PO, GU1 +Y, 192, 0, 128, 255, 0, 192, 255, 160, 255
 CBC, SISMA V, 212, 160, 255, 148, 87, 255, 148, 87, 255
 CBC, sisma_1, 160, 192, 255, 255, 192, 160, 0, 128, 192
 PO, GU1 -Y, 0, 157, 192, 255, 160, 255, 93, 255, 87
 CBC, sisma_2, 255, 255, 87, 192, 0, 128, 255, 87, 128
 RS, sisma_x, 0, 128, 57, 192, 128, 0, 163, 255, 160
 ES, sisma_x, 0, 157, 192, 78, 0, 255, 163, 255, 160
 RS, sisma_y, 192, 0, 128, 163, 160, 255, 163, 255, 160
 ES, sisma_y, 192, 72, 0, 255, 87, 128, 210, 210, 210
 CBC, sisma_3, 0, 128, 57, 192, 72, 0, 192, 0, 128
 CBC, sisma_4, 160, 255, 255, 255, 160, 255, 163, 255, 160
 CBC, sisma_5, 0, 128, 192, 0, 192, 192, 163, 160, 255
 CBC, sisma_6, 255, 192, 87, 192, 128, 0, 255, 128, 0
 CBC, sisma_7, 0, 192, 192, 255, 0, 192, 255, 128, 0
 CBC, sisma_8, 146, 0, 255, 0, 128, 255, 255, 192, 87
 CBC, sisma_9, 78, 0, 255, 0, 192, 128, 128, 192, 0
 CBC, sisma_10, 192, 72, 0, 192, 128, 0, 255, 128, 0
 CBC, sisma_11, 255, 192, 160, 192, 0, 192, 0, 128, 57
 CBC, sisma_12, 192, 0, 128, 146, 0, 255, 255, 255, 255
 CBC, sisma_13, 255, 0, 128, 78, 0, 255, 212, 160, 255
 CBC, sisma_14, 255, 87, 87, 85, 192, 0, 146, 0, 255
 CBC, sisma_15, 0, 128, 128, 255, 160, 255, 255, 128, 0
 CBC, sisma_16, 163, 255, 160, 0, 128, 57, 160, 192, 255
 CBC, sisma_17, 192, 0, 192, 160, 192, 255, 192, 72, 0
 CBC, sisma_18, 148, 87, 255, 192, 0, 192, 255, 160, 255
 CBC, sisma_19, 0, 128, 192, 212, 160, 255, 0, 128, 128
 CBC, sisma_20, 192, 192, 0, 192, 0, 128, 78, 0, 255
 CBC, sisma_21, 0, 192, 128, 0, 128, 128, 255, 255, 87
 CBC, sisma_22, 78, 0, 255, 192, 128, 0, 192, 128, 0
 CBC, sisma_23, 255, 0, 128, 255, 128, 0, 0, 128, 57
 CBC, sisma_24, 192, 72, 0, 210, 210, 210, 163, 255, 160
 CBC, sisma_25, 192, 192, 0, 148, 87, 255, 0, 128, 255
 CBC, sisma_26, 146, 0, 255, 192, 0, 128, 0, 192, 128
 CBC, sisma_27, 163, 255, 160, 255, 255, 255, 78, 0, 255
 CBC, sisma_28, 148, 87, 255, 255, 255, 255, 85, 0, 192
 CBC, sisma_29, 255, 160, 255, 255, 192, 87, 85, 192, 0
 CBC, sisma_30, 192, 192, 192, 192, 192, 0, 192, 0, 192
 CBC, sisma_31, 85, 0, 192, 85, 0, 192, 255, 160, 255
 CBC, sisma_32, 78, 0, 255, 0, 128, 128, 128, 192, 0
 CBC, ENVELOPE, 163, 160, 255, 192, 192, 192, 160, 192, 255
 CBC, SLU, 163, 255, 160, 255, 255, 255, 192, 72, 0
 PO, GU2 +X, 160, 255, 255, 0, 192, 192, 255, 128, 0
 ST, G1+G2 copertura A, 163, 255, 160, 255, 255, 255, 255, 255, 87
 PO, GU2 -X, 192, 0, 128, 78, 0, 255, 255, 87, 128
 PO, GU2 +Y, 146, 0, 255, 85, 192, 0, 255, 192, 160
 ST, G1+G2 copertura B, 148, 87, 255, 192, 128, 0, 255, 255, 255
 PO, GU2 -Y, 255, 192, 160, 0, 128, 128, 255, 0, 192
 ST, muro, 146, 0, 255, 0, 128, 192, 255, 87, 128
 ST, Q sottotetto, 255, 192, 87, 255, 87, 87, 192, 0, 192
 ST, sporto gronda, 0, 192, 128, 146, 0, 255, 148, 87, 255
 ST, Q neve, 128, 192, 0, 255, 192, 87, 192, 72, 0
 ST, SISMA X, 255, 255, 87, 192, 128, 0, 192, 192, 0
 ST, SISMA Y, 255, 87, 87, 163, 255, 160, 0, 128, 57
 ST, travi, 160, 255, 255, 85, 192, 0, 160, 192, 255

*EIGEN-CTRL    ; Eigenvalue Analysis Control
; TYPE, iFREQ, iITER, iDIM, TOL, bMINMAX, FRMIN, FRMAX, bSTRUM   ; TYPE=EIGEN
; TYPE, bINCNL, iGNUM                                            ; TYPE=RITZ(line 1)
;       KIND1, CASE1/GROUND1, iNOG1, ...                         ; TYPE=RITZ(from line
2)
   LANCZOS, 96, 20, 1, 1e-010, NO, 0, 0, NO
```

**PROJECT TITLE :**

| | | | | |
|---|---|---|---|---|
| MIDAS | Company | | Client | |
| | Author | Nicola | File Name | US1B - scuola muscoline - PE - PO - 06.mgt |

```
*DGN-MATL    ; Modify Steel(Concrete) Material
; iMAT, TYPE, MNAME, [DATA1]                                    ; STEEL
; iMAT, TYPE, MNAME, [DATA2], [R-DATA], FCI, bSERV, SHORT, LONG ; CONC
; iMAT, TYPE, MNAME, [DATA3], [DATA2], [R-DATA]                 ; SRC
; iMAT, TYPE, MNAME, [DATA5]                                    ; STEEL(None) & KSCE-A
SD05
; [DATA1] : 1, DB, CODE, NAME or 2, ELAST, POISN, FU, FY1, FY2, FY3, FY4
;           FY5, FY6, AFT, AFT2, AFT3, FY, AFV, AFV2, AFV3
; [DATA2] : 1, DB, CODE, NAME or 2, FC, CHK, LAMBDA
; [DATA3] : 1, DB, CODE, NAME or 2, ELAST, FU, FY1, FY2, FY3, FY4
;              FY5, FY6, AFT, AFT2, AFT3, FY, AFV, AFV2, AFV3
; [DATA4] : 1, DB, CODE, NAME or 2, FC
; [DATA5] : 3, ELAST, POISN, AL1, AL2, AL3, AL4, AL5, AL6, AL7, AL8, AL9, AL10
;              MIN1, MIN2, MIN3
; [R-DATA]: RBCODE, RBMAIN, RBSUB, FY(R), FYS
    6, CONC , C16/20            , 1, EN04(RC)   ,            ,C16/20        , NO, 1, U
NI(RC), B450C, B450C, , , 11200, NO, 0, 0,           ,           ,              , 0,
 NO, 1, , , , 0, 0, 0
    8, CONC , C25/30            , 1, EN04(RC)   ,            ,C25/30        , NO, 1, U
NI(RC), B450C, B450C, , , 17500, NO, 0, 0,           ,           ,              , 0,
 NO, 1, , , , 0, 0, 0

*ENDDATA
```

**PROJECT TITLE :**

| | Company | | Client | |
|---|---|---|---|---|
| MIDAS | Author | Nicola | File Name | US1B - scuola muscoline - PE - PO - 06.txt |

```
 ** midas Gen Pushover Curve Data **
_____________________________________________

[ Target Displacement ]
* Disp. Control Node : 180
* Direction : DX
* Load Pattern Type : Accerelation
* SLO- Demand, Capacity, Step, Remark : 0.012941, 0.009949, 39, N/A
* SLD- Demand, Capacity, Step, Remark : 0.012941, 0.014850, 39, OK
* SLV- Demand, Capacity, Step, Remark : 0.012941, -, 39, -
* SLC- Demand, Capacity, Step, Remark : 0.012941, -, 39, -
_____________________________________________

- Target Displacement of SLO
  m* = 192.038
  Gamma = 1
  Fy* = 564.773
  T* = 0.233453
  Se(T*) = 0.648g
  det* = 0.00877217
  qu = 2.16063
  Tc = 0.44
  dt* = 0.0129412 (short period range)
  dt = 0.0129412

- Target Displacement of SLD
  m* = 192.038
  Gamma = 1
  Fy* = 564.773
  T* = 0.233453
  Se(T*) = 0.648g
  det* = 0.00877217
  qu = 2.16063
  Tc = 0.44
  dt* = 0.0129412 (short period range)
  dt = 0.0129412

- Target Displacement of SLV
  m* = 192.038
  Gamma = 1
  Fy* = 564.773
  T* = 0.233453
  Se(T*) = 0.648g
  det* = 0.00877217
  qu = 2.16063
  Tc = 0.44
  dt* = 0.0129412 (short period range)
  dt = 0.0129412

- Target Displacement of SLC
  m* = 192.038
  Gamma = 1
  Fy* = 564.773
  T* = 0.233453
  Se(T*) = 0.648g
  det* = 0.00877217
  qu = 2.16063
  Tc = 0.44
  dt* = 0.0129412 (short period range)
  dt = 0.0129412
_____________________________________________

[ Spectral Displacement(Sd) vs. Spectral Acceleration(Sa) ]

Load Case :GU2 +X   Unit:  kN,m


 Node : 180   Direction : DX   Mode 3
```

**PROJECT TITLE :**

| | | | | |
|---|---|---|---|---|
| MIDAS | Company | | Client | |
| | Author | Nicola | File Name | US1B - scuola muscoline - PE - PO - 06.txt |

| Step Status of Step | Spectral Displacement(Sd) | Spectral Acceleration(Sa) |
|---|---|---|
| 0 | 2.25000e-005 | 3.84348e-003 |
| 1 | 2.25000e-004 | 3.84348e-002 |
| 2 | 4.50000e-004 | 6.08298e-002 |
| 3 | 6.75000e-004 | 8.21680e-002 |
| 4 | 9.00000e-004 | 9.90877e-002 |
| 5 | 1.12500e-003 | 1.13469e-001 |
| 6 | 1.35000e-003 | 1.27434e-001 |
| 7 | 1.57500e-003 | 1.41292e-001 |
| 8 | 1.80000e-003 | 1.54079e-001 |
| 9 | 2.02500e-003 | 1.65974e-001 |
| 10 | 2.25000e-003 | 1.76222e-001 |
| 11 | 2.47500e-003 | 1.85982e-001 |
| 12 | 2.70000e-003 | 1.95742e-001 |
| 13 | 2.92500e-003 | 2.05501e-001 |
| 14 | 3.15000e-003 | 2.15261e-001 |
| 15 | 3.37500e-003 | 2.24249e-001 |
| 16 | 3.60000e-003 | 2.33232e-001 |
| 17 | 3.82500e-003 | 2.41248e-001 |
| 18 | 4.05000e-003 | 2.48771e-001 |
| 19 | 4.27500e-003 | 2.56059e-001 |
| 20 | 4.50000e-003 | 2.61105e-001 |
| 21 | 4.72500e-003 | 2.64464e-001 |
| 22 | 4.95000e-003 | 2.67500e-001 |
| 23 | 5.17500e-003 | 2.70103e-001 |
| 24 | 5.40000e-003 | 2.71938e-001 |
| 25 | 5.62500e-003 | 2.73773e-001 |
| 26 | 5.85000e-003 | 2.75608e-001 |
| 27 | 6.07500e-003 | 2.77443e-001 |
| 28 | 6.30000e-003 | 2.79278e-001 |
| 29 | 6.52500e-003 | 2.81113e-001 |
| 30 | 6.75000e-003 | 2.82948e-001 |
| 31 | 6.97500e-003 | 2.84783e-001 |

| | | | |
|---|---|---|---|
| 32 | 7.20000e-003 | 2.86449e-001 | |
| 33 | 7.42500e-003 | 2.87689e-001 | |
| 34 | 7.65000e-003 | 2.88929e-001 | |
| 35 | 7.87500e-003 | 2.90168e-001 | |
| 36 | 8.10000e-003 | 2.91387e-001 | |
| 37 | 8.32500e-003 | 2.92585e-001 | |
| 38 | 8.55000e-003 | 2.93761e-001 | |
| 39 | 8.77500e-003 | 2.94843e-001 | SLO(Dem.)SLD(Dem.)SLV(Dem.)SLC(Dem.) |
| 40 | 9.00000e-003 | 2.95853e-001 | |
| 41 | 9.22500e-003 | 2.96835e-001 | |
| 42 | 9.45000e-003 | 2.97781e-001 | |
| 43 | 9.67500e-003 | 2.98724e-001 | |
| 44 | 9.90000e-003 | 2.99666e-001 | |
| 45 | 1.01250e-002 | 3.00609e-001 | |
| 46 | 1.03500e-002 | 3.01551e-001 | |
| 47 | 1.05750e-002 | 3.02493e-001 | |
| 48 | 1.08000e-002 | 3.03436e-001 | |
| 49 | 1.10250e-002 | 3.04363e-001 | |
| 50 | 1.12500e-002 | 3.05275e-001 | |
| 51 | 1.14750e-002 | 3.06186e-001 | |
| 52 | 1.17000e-002 | 3.07098e-001 | |
| 53 | 1.19250e-002 | 3.08009e-001 | |
| 54 | 1.21500e-002 | 3.08921e-001 | |
| 55 | 1.23750e-002 | 3.09832e-001 | |
| 56 | 1.26000e-002 | 3.10733e-001 | |
| 57 | 1.28250e-002 | 3.11548e-001 | |
| 58 | 1.30500e-002 | 3.12362e-001 | |
| 59 | 1.32750e-002 | 3.13176e-001 | |
| 60 | 1.35000e-002 | 3.13832e-001 | |
| 61 | 1.37250e-002 | 3.14434e-001 | |
| 62 | 1.39500e-002 | 3.15037e-001 | |
| 63 | 1.41750e-002 | 3.15639e-001 | |
| 64 | 1.44000e-002 | 3.16242e-001 | |
| 65 | 1.46250e-002 | 3.16844e-001 | |
| 66 | 1.48500e-002 | 3.17447e-001 | |

SLD(Cap.)

| | | |
|---|---|---|
| 67 | 1.50750e-002 | 3.10749e-001 |
| 68 | 1.53000e-002 | 3.11305e-001 |
| 69 | 1.55250e-002 | 3.11862e-001 |
| 70 | 1.57500e-002 | 3.12411e-001 |
| 71 | 1.59750e-002 | 3.12958e-001 |
| 72 | 1.62000e-002 | 3.13505e-001 |
| 73 | 1.64250e-002 | 3.14052e-001 |
| 74 | 1.66500e-002 | 3.14599e-001 |
| 75 | 1.68750e-002 | 3.15145e-001 |
| 76 | 1.71000e-002 | 3.06865e-001 |
| 77 | 1.73250e-002 | 3.07476e-001 |
| 78 | 1.75500e-002 | 3.08028e-001 |
| 79 | 1.77750e-002 | 2.87964e-001 |
| 80 | 1.80000e-002 | 2.88433e-001 |
| 81 | 1.82250e-002 | 2.88872e-001 |
| 82 | 1.84500e-002 | 2.89311e-001 |
| 83 | 1.86750e-002 | 2.89751e-001 |
| 84 | 1.89000e-002 | 2.90190e-001 |
| 85 | 1.91250e-002 | 2.90629e-001 |
| 86 | 1.93500e-002 | 2.91068e-001 |
| 87 | 1.95750e-002 | 2.91507e-001 |
| 88 | 1.98000e-002 | 2.91946e-001 |
| 89 | 2.00250e-002 | 2.92384e-001 |
| 90 | 2.02500e-002 | 2.92815e-001 |
| 91 | 2.04750e-002 | 2.93247e-001 |
| 92 | 2.07000e-002 | 2.93678e-001 |
| 93 | 2.09250e-002 | 2.94109e-001 |
| 94 | 2.11500e-002 | 2.94540e-001 |
| 95 | 2.13750e-002 | 2.94971e-001 |
| 96 | 2.16000e-002 | 2.95402e-001 |
| 97 | 2.18250e-002 | 2.95833e-001 |
| 98 | 2.20500e-002 | 2.96264e-001 |
| 99 | 2.22750e-002 | 2.96695e-001 |
| 100 | 2.25000e-002 | 2.97126e-001 |

**PROJECT TITLE :**

| | | | | |
|---|---|---|---|---|
| MIDAS | Company | | Client | |
| | Author | Nicola | File Name | US1B - scuola muscoline - PE - PO - 06.txt |

| | | |
|---|---|---|
| 101 | 2.27250e-002 | 2.97557e-001 |
| 102 | 2.29500e-002 | 2.97988e-001 |
| 103 | 2.31750e-002 | 2.98419e-001 |
| 104 | 2.34000e-002 | 2.98850e-001 |
| 105 | 2.36250e-002 | 2.99281e-001 |
| 106 | 2.38500e-002 | 2.99712e-001 |
| 107 | 2.40750e-002 | 3.00144e-001 |
| 108 | 2.43000e-002 | 3.00575e-001 |
| 109 | 2.45250e-002 | 3.01006e-001 |
| 110 | 2.47500e-002 | 3.01437e-001 |
| 111 | 2.49750e-002 | 3.01868e-001 |
| 112 | 2.52000e-002 | 3.02299e-001 |
| 113 | 2.54250e-002 | 3.02730e-001 |
| 114 | 2.56500e-002 | 3.03161e-001 |
| 115 | 2.58750e-002 | 3.03592e-001 |
| 116 | 2.61000e-002 | 3.04023e-001 |
| 117 | 2.63250e-002 | 3.04454e-001 |
| 118 | 2.65500e-002 | 3.04885e-001 |
| 119 | 2.67750e-002 | 3.05316e-001 |
| 120 | 2.70000e-002 | 3.00698e-001 |
| 121 | 2.72250e-002 | 3.01146e-001 |
| 122 | 2.74500e-002 | 3.01589e-001 |
| 123 | 2.76750e-002 | 3.02029e-001 |
| 124 | 2.79000e-002 | 3.02470e-001 |
| 125 | 2.81250e-002 | 3.02910e-001 |
| 126 | 2.83500e-002 | 3.03350e-001 |
| 127 | 2.85750e-002 | 3.03791e-001 |
| 128 | 2.88000e-002 | 3.04231e-001 |
| 129 | 2.90250e-002 | 3.04671e-001 |
| 130 | 2.92500e-002 | 3.05105e-001 |
| 131 | 2.94750e-002 | 3.05536e-001 |
| 132 | 2.97000e-002 | 3.05967e-001 |
| 133 | 2.99250e-002 | 3.06398e-001 |
| 134 | 3.01500e-002 | 3.06829e-001 |
| 135 | 3.03750e-002 | 3.07260e-001 |

**PROJECT TITLE :**

| | | | | |
|---|---|---|---|---|
| MIDAS | Company | | Client | |
| | Author | Nicola | File Name | US1B - scuola muscoline - PE - PO - 06.txt |

| | | |
|---|---|---|
| 136 | 3.06000e-002 | 3.07691e-001 |
| 137 | 3.08250e-002 | 3.08121e-001 |
| 138 | 3.10500e-002 | 3.08552e-001 |
| 139 | 3.12750e-002 | 3.08983e-001 |
| 140 | 3.15000e-002 | 3.09414e-001 |
| 141 | 3.17250e-002 | 3.07953e-001 |
| 142 | 3.19500e-002 | 3.00867e-001 |
| 143 | 3.21750e-002 | 3.01321e-001 |
| 144 | 3.24000e-002 | 3.01763e-001 |
| 145 | 3.26250e-002 | 3.02204e-001 |
| 146 | 3.28500e-002 | 3.02646e-001 |
| 147 | 3.30750e-002 | 3.03088e-001 |
| 148 | 3.33000e-002 | 3.03530e-001 |
| 149 | 3.35250e-002 | 3.02184e-001 |
| 150 | 3.37500e-002 | 3.02643e-001 |
| 151 | 3.39750e-002 | 3.03096e-001 |
| 152 | 3.42000e-002 | 3.02646e-001 |
| 153 | 3.44250e-002 | 3.03115e-001 |
| 154 | 3.46500e-002 | 3.03584e-001 |
| 155 | 3.48750e-002 | 3.02715e-001 |
| 156 | 3.51000e-002 | 2.27619e-001 |
| 157 | 3.53250e-002 | 2.28456e-001 |
| 158 | 3.55500e-002 | 2.29276e-001 |
| 159 | 3.57750e-002 | 2.29981e-001 |
| 160 | 3.60000e-002 | 2.30642e-001 |
| 161 | 3.62250e-002 | 2.31303e-001 |
| 162 | 3.64500e-002 | 2.31964e-001 |
| 163 | 3.66750e-002 | 2.32551e-001 |
| 164 | 3.69000e-002 | 2.33021e-001 |
| 165 | 3.71250e-002 | 2.11928e-001 |
| 166 | 3.73500e-002 | 2.12591e-001 |
| 167 | 3.75750e-002 | 2.13129e-001 |
| 168 | 3.78000e-002 | 2.13607e-001 |
| 169 | 3.80250e-002 | 2.14086e-001 |

| | | |
|---|---|---|
| 170 | 3.82500e-002 | 2.14564e-001 |
| 171 | 3.84750e-002 | 2.15030e-001 |
| 172 | 3.87000e-002 | 2.15494e-001 |
| 173 | 3.89250e-002 | 2.15958e-001 |
| 174 | 3.91500e-002 | 2.16422e-001 |
| 175 | 3.93750e-002 | 2.16886e-001 |
| 176 | 3.96000e-002 | 2.17350e-001 |
| 177 | 3.98250e-002 | 2.17814e-001 |
| 178 | 4.00500e-002 | 2.15699e-001 |
| 179 | 4.02750e-002 | 2.16161e-001 |
| 180 | 4.05000e-002 | 2.16614e-001 |
| 181 | 4.07250e-002 | 2.15444e-001 |
| 182 | 4.09500e-002 | 2.15908e-001 |
| 183 | 4.11750e-002 | 2.16364e-001 |
| 184 | 4.14000e-002 | 2.16819e-001 |
| 185 | 4.16250e-002 | 2.17275e-001 |
| 186 | 4.18500e-002 | 2.17730e-001 |
| 187 | 4.20750e-002 | 2.18186e-001 |
| 188 | 4.23000e-002 | 2.18641e-001 |
| 189 | 4.25250e-002 | 2.19097e-001 |
| 190 | 4.27500e-002 | 2.19552e-001 |
| 191 | 4.29750e-002 | 2.20008e-001 |
| 192 | 4.32000e-002 | 2.20460e-001 |
| 193 | 4.34250e-002 | 2.20912e-001 |
| 194 | 4.36500e-002 | 2.21364e-001 |
| 195 | 4.38750e-002 | 2.21814e-001 |
| 196 | 4.41000e-002 | 2.22258e-001 |
| 197 | 4.43250e-002 | 2.22699e-001 |
| 198 | 4.45500e-002 | 2.23141e-001 |
| 199 | 4.47750e-002 | 2.23580e-001 |
| 200 | 4.50000e-002 | 2.24020e-001 |

| | | |
|---|---|---|
| Min : | 2.25000e-005 | 3.84348e-003 |
| Max : | 1.48500e-002 | 3.17447e-001 |

**PROJECT TITLE :**

| | | | | |
|---|---|---|---|---|
| MIDAS | Company | | Client | |
| | Author | Nicola | File Name | US1B - scuola muscoline - PE - PO - 06.txt |

```
 ** midas Gen Pushover Curve Data **
_____________________________________________

[ Target Displacement ]
* Disp. Control Node : 180
* Direction : DX
* Load Pattern Type : Accerelation
* SLO- Demand, Capacity, Step, Remark : 0.012661, 0.010100, 37, N/A
* SLD- Demand, Capacity, Step, Remark : 0.012661, 0.015075, 37, OK
* SLV- Demand, Capacity, Step, Remark : 0.012661, -, 37, -
* SLC- Demand, Capacity, Step, Remark : 0.012661, -, 37, -
_____________________________________________

- Target Displacement of SLO
  m* = 192.038
  Gamma = 1
  Fy* = 552.39
  T* = 0.228491
  Se(T*) = 0.648g
  det* = 0.00840321
  qu = 2.20907
  Tc = 0.44
  dt* = 0.0126606 (short period range)
  dt = 0.0126606

- Target Displacement of SLD
  m* = 192.038
  Gamma = 1
  Fy* = 552.39
  T* = 0.228491
  Se(T*) = 0.648g
  det* = 0.00840321
  qu = 2.20907
  Tc = 0.44
  dt* = 0.0126606 (short period range)
  dt = 0.0126606

- Target Displacement of SLV
  m* = 192.038
  Gamma = 1
  Fy* = 552.39
  T* = 0.228491
  Se(T*) = 0.648g
  det* = 0.00840321
  qu = 2.20907
  Tc = 0.44
  dt* = 0.0126606 (short period range)
  dt = 0.0126606

- Target Displacement of SLC
  m* = 192.038
  Gamma = 1
  Fy* = 552.39
  T* = 0.228491
  Se(T*) = 0.648g
  det* = 0.00840321
  qu = 2.20907
  Tc = 0.44
  dt* = 0.0126606 (short period range)
  dt = 0.0126606
_____________________________________________

[ Spectral Displacement(Sd) vs. Spectral Acceleration(Sa) ]

Load Case :GU2 -X   Unit:  kN,m


 Node : 180   Direction : DX   Mode 3
```

**PROJECT TITLE :**

| | | | | |
|---|---|---|---|---|
| MIDAS | Company | | Client | |
| | Author | Nicola | File Name | US1B - scuola muscoline - PE - PO - 06.txt |

| Step Status of Step | Spectral Displacement(Sd) | Spectral Acceleration(Sa) |
|---|---|---|
| 0 | 2.25000e-005 | 4.16768e-003 |
| 1 | 2.25000e-004 | 4.16768e-002 |
| 2 | 4.50000e-004 | 6.51672e-002 |
| 3 | 6.75000e-004 | 8.66234e-002 |
| 4 | 9.00000e-004 | 1.04572e-001 |
| 5 | 1.12500e-003 | 1.18858e-001 |
| 6 | 1.35000e-003 | 1.32445e-001 |
| 7 | 1.57500e-003 | 1.45166e-001 |
| 8 | 1.80000e-003 | 1.57169e-001 |
| 9 | 2.02500e-003 | 1.68700e-001 |
| 10 | 2.25000e-003 | 1.79923e-001 |
| 11 | 2.47500e-003 | 1.89785e-001 |
| 12 | 2.70000e-003 | 1.99338e-001 |
| 13 | 2.92500e-003 | 2.08442e-001 |
| 14 | 3.15000e-003 | 2.17478e-001 |
| 15 | 3.37500e-003 | 2.26513e-001 |
| 16 | 3.60000e-003 | 2.35549e-001 |
| 17 | 3.82500e-003 | 2.44359e-001 |
| 18 | 4.05000e-003 | 2.50238e-001 |
| 19 | 4.27500e-003 | 2.54034e-001 |
| 20 | 4.50000e-003 | 2.57612e-001 |
| 21 | 4.72500e-003 | 2.60836e-001 |
| 22 | 4.95000e-003 | 2.64055e-001 |
| 23 | 5.17500e-003 | 2.67265e-001 |
| 24 | 5.40000e-003 | 2.70310e-001 |
| 25 | 5.62500e-003 | 2.72215e-001 |
| 26 | 5.85000e-003 | 2.74049e-001 |
| 27 | 6.07500e-003 | 2.75868e-001 |
| 28 | 6.30000e-003 | 2.77676e-001 |
| 29 | 6.52500e-003 | 2.79483e-001 |
| 30 | 6.75000e-003 | 2.80832e-001 |
| 31 | 6.97500e-003 | 2.81913e-001 |

| | | | |
|---|---|---|---|
| 32 | 7.20000e-003 | 2.82993e-001 | |
| 33 | 7.42500e-003 | 2.84073e-001 | |
| 34 | 7.65000e-003 | 2.85151e-001 | |
| 35 | 7.87500e-003 | 2.86230e-001 | |
| 36 | 8.10000e-003 | 2.87308e-001 | |
| 37 | 8.32500e-003 | 2.88387e-001 | SLO(Dem.)SLD(Dem.)SLV(Dem.)SLC(Dem.) |
| 38 | 8.55000e-003 | 2.89465e-001 | |
| 39 | 8.77500e-003 | 2.90544e-001 | |
| 40 | 9.00000e-003 | 2.91568e-001 | |
| 41 | 9.22500e-003 | 2.92585e-001 | |
| 42 | 9.45000e-003 | 2.93590e-001 | |
| 43 | 9.67500e-003 | 2.94580e-001 | |
| 44 | 9.90000e-003 | 2.95552e-001 | |
| 45 | 1.01250e-002 | 2.96516e-001 | |
| 46 | 1.03500e-002 | 2.97479e-001 | |
| 47 | 1.05750e-002 | 2.98443e-001 | |
| 48 | 1.08000e-002 | 2.99407e-001 | |
| 49 | 1.10250e-002 | 3.00296e-001 | |
| 50 | 1.12500e-002 | 3.01184e-001 | |
| 51 | 1.14750e-002 | 3.02072e-001 | |
| 52 | 1.17000e-002 | 3.02960e-001 | |
| 53 | 1.19250e-002 | 3.03802e-001 | |
| 54 | 1.21500e-002 | 3.04642e-001 | |
| 55 | 1.23750e-002 | 3.05481e-001 | |
| 56 | 1.26000e-002 | 3.06321e-001 | |
| 57 | 1.28250e-002 | 3.07138e-001 | |
| 58 | 1.30500e-002 | 3.07863e-001 | |
| 59 | 1.32750e-002 | 3.08588e-001 | |
| 60 | 1.35000e-002 | 3.09291e-001 | |
| 61 | 1.37250e-002 | 3.09994e-001 | |
| 62 | 1.39500e-002 | 3.10696e-001 | |
| 63 | 1.41750e-002 | 3.11366e-001 | |
| 64 | 1.44000e-002 | 3.12014e-001 | |
| 65 | 1.46250e-002 | 3.12662e-001 | |
| 66 | 1.48500e-002 | 3.13310e-001 | |

| | | |
|---|---|---|
| 67 | 1.50750e-002 | 3.13958e-001 |
| SLD(Cap.) | | |
| 68 | 1.53000e-002 | 3.07222e-001 |
| 69 | 1.55250e-002 | 3.01492e-001 |
| 70 | 1.57500e-002 | 2.96686e-001 |
| 71 | 1.59750e-002 | 2.97205e-001 |
| 72 | 1.62000e-002 | 2.97725e-001 |
| 73 | 1.64250e-002 | 2.98244e-001 |
| 74 | 1.66500e-002 | 2.98763e-001 |
| 75 | 1.68750e-002 | 2.99282e-001 |
| 76 | 1.71000e-002 | 2.99800e-001 |
| 77 | 1.73250e-002 | 3.00310e-001 |
| 78 | 1.75500e-002 | 3.00821e-001 |
| 79 | 1.77750e-002 | 2.80978e-001 |
| 80 | 1.80000e-002 | 2.81497e-001 |
| 81 | 1.82250e-002 | 2.82009e-001 |
| 82 | 1.84500e-002 | 2.82469e-001 |
| 83 | 1.86750e-002 | 2.82930e-001 |
| 84 | 1.89000e-002 | 2.83391e-001 |
| 85 | 1.91250e-002 | 2.83852e-001 |
| 86 | 1.93500e-002 | 2.84312e-001 |
| 87 | 1.95750e-002 | 2.81580e-001 |
| 88 | 1.98000e-002 | 2.82063e-001 |
| 89 | 2.00250e-002 | 2.82547e-001 |
| 90 | 2.02500e-002 | 2.83023e-001 |
| 91 | 2.04750e-002 | 2.83498e-001 |
| 92 | 2.07000e-002 | 2.83973e-001 |
| 93 | 2.09250e-002 | 2.84429e-001 |
| 94 | 2.11500e-002 | 2.84870e-001 |
| 95 | 2.13750e-002 | 2.85303e-001 |
| 96 | 2.16000e-002 | 2.85736e-001 |
| 97 | 2.18250e-002 | 2.86169e-001 |
| 98 | 2.20500e-002 | 2.86602e-001 |
| 99 | 2.22750e-002 | 2.87035e-001 |
| 100 | 2.25000e-002 | 2.87468e-001 |

**PROJECT TITLE :**

| | Company | | Client | |
|---|---|---|---|---|
| MIDAS | Author | Nicola | File Name | US1B - scuola muscoline - PE - PO - 06.txt |

| | | |
|---|---|---|
| 101 | 2.27250e-002 | 2.87901e-001 |
| 102 | 2.29500e-002 | 2.88333e-001 |
| 103 | 2.31750e-002 | 2.88766e-001 |
| 104 | 2.34000e-002 | 2.89199e-001 |
| 105 | 2.36250e-002 | 2.89632e-001 |
| 106 | 2.38500e-002 | 2.90065e-001 |
| 107 | 2.40750e-002 | 2.90498e-001 |
| 108 | 2.43000e-002 | 2.90931e-001 |
| 109 | 2.45250e-002 | 2.91364e-001 |
| 110 | 2.47500e-002 | 2.91797e-001 |
| 111 | 2.49750e-002 | 2.92230e-001 |
| 112 | 2.52000e-002 | 2.92663e-001 |
| 113 | 2.54250e-002 | 2.93096e-001 |
| 114 | 2.56500e-002 | 2.93528e-001 |
| 115 | 2.58750e-002 | 2.93961e-001 |
| 116 | 2.61000e-002 | 2.94394e-001 |
| 117 | 2.63250e-002 | 2.94827e-001 |
| 118 | 2.65500e-002 | 2.95260e-001 |
| 119 | 2.67750e-002 | 2.95693e-001 |
| 120 | 2.70000e-002 | 2.96126e-001 |
| 121 | 2.72250e-002 | 2.96559e-001 |
| 122 | 2.74500e-002 | 2.96992e-001 |
| 123 | 2.76750e-002 | 2.97425e-001 |
| 124 | 2.79000e-002 | 2.97858e-001 |
| 125 | 2.81250e-002 | 2.98290e-001 |
| 126 | 2.83500e-002 | 2.98723e-001 |
| 127 | 2.85750e-002 | 2.99156e-001 |
| 128 | 2.88000e-002 | 2.99589e-001 |
| 129 | 2.90250e-002 | 3.00022e-001 |
| 130 | 2.92500e-002 | 3.00455e-001 |
| 131 | 2.94750e-002 | 3.00087e-001 |
| 132 | 2.97000e-002 | 3.00537e-001 |
| 133 | 2.99250e-002 | 3.00987e-001 |
| 134 | 3.01500e-002 | 3.01437e-001 |
| 135 | 3.03750e-002 | 3.01887e-001 |

**PROJECT TITLE :**

| | | | | |
|---|---|---|---|---|
| MIDAS | Company | | Client | |
| | Author | Nicola | File Name | US1B - scuola muscoline - PE - PO - 06.txt |

| | | |
|---|---|---|
| 136 | 3.06000e-002 | 3.02337e-001 |
| 137 | 3.08250e-002 | 3.02787e-001 |
| 138 | 3.10500e-002 | 3.03237e-001 |
| 139 | 3.12750e-002 | 3.03677e-001 |
| 140 | 3.15000e-002 | 3.04115e-001 |
| 141 | 3.17250e-002 | 3.04553e-001 |
| 142 | 3.19500e-002 | 2.97435e-001 |
| 143 | 3.21750e-002 | 2.97873e-001 |
| 144 | 3.24000e-002 | 2.98311e-001 |
| 145 | 3.26250e-002 | 2.98167e-001 |
| 146 | 3.28500e-002 | 2.98602e-001 |
| 147 | 3.30750e-002 | 2.99036e-001 |
| 148 | 3.33000e-002 | 2.99470e-001 |
| 149 | 3.35250e-002 | 2.96178e-001 |
| 150 | 3.37500e-002 | 2.96682e-001 |
| 151 | 3.39750e-002 | 2.97156e-001 |
| 152 | 3.42000e-002 | 2.97619e-001 |
| 153 | 3.44250e-002 | 2.98077e-001 |
| 154 | 3.46500e-002 | 2.24897e-001 |
| 155 | 3.48750e-002 | 2.25756e-001 |
| 156 | 3.51000e-002 | 2.26494e-001 |
| 157 | 3.53250e-002 | 2.27175e-001 |
| 158 | 3.55500e-002 | 2.27856e-001 |
| 159 | 3.57750e-002 | 2.28535e-001 |
| 160 | 3.60000e-002 | 2.29052e-001 |
| 161 | 3.62250e-002 | 2.29515e-001 |
| 162 | 3.64500e-002 | 2.29977e-001 |
| 163 | 3.66750e-002 | 2.28520e-001 |
| 164 | 3.69000e-002 | 2.28988e-001 |
| 165 | 3.71250e-002 | 2.08342e-001 |
| 166 | 3.73500e-002 | 2.08972e-001 |
| 167 | 3.75750e-002 | 2.09448e-001 |
| 168 | 3.78000e-002 | 2.09925e-001 |
| 169 | 3.80250e-002 | 2.10402e-001 |

| | | |
|---|---|---|
| 170 | 3.82500e-002 | 2.10865e-001 |
| 171 | 3.84750e-002 | 2.09945e-001 |
| 172 | 3.87000e-002 | 2.10417e-001 |
| 173 | 3.89250e-002 | 2.10886e-001 |
| 174 | 3.91500e-002 | 2.11349e-001 |
| 175 | 3.93750e-002 | 2.11811e-001 |
| 176 | 3.96000e-002 | 2.10654e-001 |
| 177 | 3.98250e-002 | 2.11107e-001 |
| 178 | 4.00500e-002 | 2.11561e-001 |
| 179 | 4.02750e-002 | 2.12014e-001 |
| 180 | 4.05000e-002 | 2.12468e-001 |
| 181 | 4.07250e-002 | 2.12922e-001 |
| 182 | 4.09500e-002 | 2.13375e-001 |
| 183 | 4.11750e-002 | 2.13829e-001 |
| 184 | 4.14000e-002 | 2.14282e-001 |
| 185 | 4.16250e-002 | 2.14736e-001 |
| 186 | 4.18500e-002 | 2.15189e-001 |
| 187 | 4.20750e-002 | 2.13980e-001 |
| 188 | 4.23000e-002 | 2.14429e-001 |
| 189 | 4.25250e-002 | 2.13579e-001 |
| 190 | 4.27500e-002 | 2.14033e-001 |
| 191 | 4.29750e-002 | 2.14485e-001 |
| 192 | 4.32000e-002 | 2.14935e-001 |
| 193 | 4.34250e-002 | 2.15385e-001 |
| 194 | 4.36500e-002 | 2.15835e-001 |
| 195 | 4.38750e-002 | 2.16285e-001 |
| 196 | 4.41000e-002 | 2.16735e-001 |
| 197 | 4.43250e-002 | 2.17184e-001 |
| 198 | 4.45500e-002 | 2.17630e-001 |
| 199 | 4.47750e-002 | 2.18077e-001 |
| 200 | 4.50000e-002 | 2.18524e-001 |

| | | |
|---|---|---|
| Min : | 2.25000e-005 | 4.16768e-003 |
| Max : | 1.50750e-002 | 3.13958e-001 |

**PROJECT TITLE :**

| | Company | | Client | |
|---|---|---|---|---|
| MIDAS | Author | Nicola | File Name | US1B - scuola muscoline - PE - PO - 06.txt |

```
 ** midas Gen Pushover Curve Data **
_____________________________________________

[ Target Displacement ]
* Disp. Control Node : 180
* Direction : DY
* Load Pattern Type : Accerelation
* SLO- Demand, Capacity, Step, Remark : 0.009112, 0.005125, 30, N/A
* SLD- Demand, Capacity, Step, Remark : 0.009112, 0.007650, 30, N/A
* SLV- Demand, Capacity, Step, Remark : 0.009112, -, 30, -
* SLC- Demand, Capacity, Step, Remark : 0.009112, -, 30, -
_____________________________________________

- Target Displacement of SLO
  m* = 182.248
  Gamma = 1
  Fy* = 421.614
  T* = 0.166324
  Se(T*) = 0.648g
  det* = 0.00445262
  qu = 2.74672
  Tc = 0.44
  dt* = 0.00911178 (short period range)
  dt = 0.00911178

- Target Displacement of SLD
  m* = 182.248
  Gamma = 1
  Fy* = 421.614
  T* = 0.166324
  Se(T*) = 0.648g
  det* = 0.00445262
  qu = 2.74672
  Tc = 0.44
  dt* = 0.00911178 (short period range)
  dt = 0.00911178

- Target Displacement of SLV
  m* = 182.248
  Gamma = 1
  Fy* = 421.614
  T* = 0.166324
  Se(T*) = 0.648g
  det* = 0.00445262
  qu = 2.74672
  Tc = 0.44
  dt* = 0.00911178 (short period range)
  dt = 0.00911178

- Target Displacement of SLC
  m* = 182.248
  Gamma = 1
  Fy* = 421.614
  T* = 0.166324
  Se(T*) = 0.648g
  det* = 0.00445262
  qu = 2.74672
  Tc = 0.44
  dt* = 0.00911178 (short period range)
  dt = 0.00911178
_____________________________________________

[ Spectral Displacement(Sd) vs. Spectral Acceleration(Sa) ]

Load Case :GU2 +Y   Unit:  kN,m


 Node : 180   Direction : DY   Mode 1
```

**PROJECT TITLE :**

| | | | | |
|---|---|---|---|---|
| MIDAS | Company | | Client | |
| | Author | Nicola | File Name | US1B - scuola muscoline - PE - PO - 06.txt |

| Step | Spectral Displacement(Sd) | Spectral Acceleration(Sa) | Status of Step |
|---|---|---|---|
| 0 | 1.50000e-005 | 2.60579e-003 | |
| 1 | 1.50000e-004 | 2.60579e-002 | |
| 2 | 3.00000e-004 | 5.20995e-002 | |
| 3 | 4.50000e-004 | 7.53522e-002 | |
| 4 | 6.00000e-004 | 9.75480e-002 | |
| 5 | 7.50000e-004 | 1.19744e-001 | |
| 6 | 9.00000e-004 | 1.39070e-001 | |
| 7 | 1.05000e-003 | 1.51016e-001 | |
| 8 | 1.20000e-003 | 1.61960e-001 | |
| 9 | 1.35000e-003 | 1.71576e-001 | |
| 10 | 1.50000e-003 | 1.80515e-001 | |
| 11 | 1.65000e-003 | 1.88318e-001 | |
| 12 | 1.80000e-003 | 1.95908e-001 | |
| 13 | 1.95000e-003 | 2.01889e-001 | |
| 14 | 2.10000e-003 | 2.07358e-001 | |
| 15 | 2.25000e-003 | 2.12549e-001 | |
| 16 | 2.40000e-003 | 2.17666e-001 | |
| 17 | 2.55000e-003 | 2.22679e-001 | |
| 18 | 2.70000e-003 | 2.27589e-001 | |
| 19 | 2.85000e-003 | 2.32498e-001 | |
| 20 | 3.00000e-003 | 2.35390e-001 | |
| 21 | 3.15000e-003 | 2.36257e-001 | |
| 22 | 3.30000e-003 | 2.37058e-001 | |
| 23 | 3.45000e-003 | 2.37858e-001 | |
| 24 | 3.60000e-003 | 2.38659e-001 | |
| 25 | 3.75000e-003 | 2.39460e-001 | |
| 26 | 3.90000e-003 | 2.40260e-001 | |
| 27 | 4.05000e-003 | 2.40981e-001 | |
| 28 | 4.20000e-003 | 2.41652e-001 | |
| 29 | 4.35000e-003 | 2.42296e-001 | |
| 30 | 4.50000e-003 | 2.42920e-001 | SLO(Dem.)SLD(Dem.)SLV(Dem.)SLC(Dem.) |
| 31 | 4.65000e-003 | 2.43504e-001 | |

**PROJECT TITLE :**

| | Company | | Client | |
|---|---|---|---|---|
| MIDAS | Author | Nicola | File Name | US1B - scuola muscoline - PE - PO - 06.txt |

| | | | |
|---|---|---|---|
| | 32 | 4.80000e-003 | 2.44001e-001 |
| | 33 | 4.95000e-003 | 2.44360e-001 |
| | 34 | 5.10000e-003 | 2.44701e-001 |
| | 35 | 5.25000e-003 | 2.44958e-001 |
| | 36 | 5.40000e-003 | 2.45215e-001 |
| | 37 | 5.55000e-003 | 2.45463e-001 |
| | 38 | 5.70000e-003 | 2.45691e-001 |
| | 39 | 5.85000e-003 | 2.45919e-001 |
| | 40 | 6.00000e-003 | 2.46148e-001 |
| | 41 | 6.15000e-003 | 2.46376e-001 |
| | 42 | 6.30000e-003 | 2.46604e-001 |
| | 43 | 6.45000e-003 | 2.46832e-001 |
| | 44 | 6.60000e-003 | 2.47060e-001 |
| | 45 | 6.75000e-003 | 2.47288e-001 |
| | 46 | 6.90000e-003 | 2.47517e-001 |
| | 47 | 7.05000e-003 | 2.47672e-001 |
| | 48 | 7.20000e-003 | 2.47774e-001 |
| | 49 | 7.35000e-003 | 2.47876e-001 |
| | 50 | 7.50000e-003 | 2.47979e-001 |
| | 51 | 7.65000e-003 | 2.48081e-001 |
| SLD(Cap.) | 52 | 7.80000e-003 | 2.38685e-001 |
| | 53 | 7.95000e-003 | 2.38887e-001 |
| | 54 | 8.10000e-003 | 2.39085e-001 |
| | 55 | 8.25000e-003 | 2.39236e-001 |
| | 56 | 8.40000e-003 | 2.39338e-001 |
| | 57 | 8.55000e-003 | 2.39440e-001 |
| | 58 | 8.70000e-003 | 2.39542e-001 |
| | 59 | 8.85000e-003 | 2.39644e-001 |
| | 60 | 9.00000e-003 | 2.39746e-001 |
| | 61 | 9.15000e-003 | 2.39848e-001 |
| | 62 | 9.30000e-003 | 2.39950e-001 |
| | 63 | 9.45000e-003 | 2.40052e-001 |
| | 64 | 9.60000e-003 | 2.40154e-001 |
| | 65 | 9.75000e-003 | 2.40256e-001 |
| | 66 | 9.90000e-003 | 2.40358e-001 |

**PROJECT TITLE :**

| | | | | |
|---|---|---|---|---|
| MIDAS | Company | | Client | |
| | Author | Nicola | File Name | US1B - scuola muscoline - PE - PO - 06.txt |

| | | |
|---|---|---|
| 67 | 1.00500e-002 | 2.40460e-001 |
| 68 | 1.02000e-002 | 2.40562e-001 |
| 69 | 1.03500e-002 | 2.40664e-001 |
| 70 | 1.05000e-002 | 2.40766e-001 |
| 71 | 1.06500e-002 | 2.40868e-001 |
| 72 | 1.08000e-002 | 2.40970e-001 |
| 73 | 1.09500e-002 | 2.41072e-001 |
| 74 | 1.11000e-002 | 2.41174e-001 |
| 75 | 1.12500e-002 | 2.41276e-001 |
| 76 | 1.14000e-002 | 2.41378e-001 |
| 77 | 1.15500e-002 | 2.41480e-001 |
| 78 | 1.17000e-002 | 2.33245e-001 |
| 79 | 1.18500e-002 | 2.33479e-001 |
| 80 | 1.20000e-002 | 2.33714e-001 |
| 81 | 1.21500e-002 | 2.33949e-001 |
| 82 | 1.23000e-002 | 2.34175e-001 |
| 83 | 1.24500e-002 | 2.34342e-001 |
| 84 | 1.26000e-002 | 2.34484e-001 |
| 85 | 1.27500e-002 | 2.34508e-001 |
| 86 | 1.29000e-002 | 2.34532e-001 |
| 87 | 1.30500e-002 | 2.34556e-001 |
| 88 | 1.32000e-002 | 2.34580e-001 |
| 89 | 1.33500e-002 | 2.34603e-001 |
| 90 | 1.35000e-002 | 2.34627e-001 |
| 91 | 1.36500e-002 | 2.34651e-001 |
| 92 | 1.38000e-002 | 2.34675e-001 |
| 93 | 1.39500e-002 | 2.34699e-001 |
| 94 | 1.41000e-002 | 2.34723e-001 |
| 95 | 1.42500e-002 | 2.34747e-001 |
| 96 | 1.44000e-002 | 2.34771e-001 |
| 97 | 1.45500e-002 | 2.34795e-001 |
| 98 | 1.47000e-002 | 2.34819e-001 |
| 99 | 1.48500e-002 | 2.34843e-001 |
| 100 | 1.50000e-002 | 2.34867e-001 |

**PROJECT TITLE :**

| | Company | | Client | |
|---|---|---|---|---|
| MIDAS | Author | Nicola | File Name | US1B - scuola muscoline - PE - PO - 06.txt |

| | | |
|---|---|---|
| 101 | 1.51500e-002 | 2.34891e-001 |
| 102 | 1.53000e-002 | 2.34915e-001 |
| 103 | 1.54500e-002 | 2.34939e-001 |
| 104 | 1.56000e-002 | 2.34963e-001 |
| 105 | 1.57500e-002 | 2.34987e-001 |
| 106 | 1.59000e-002 | 2.35011e-001 |
| 107 | 1.60500e-002 | 2.35035e-001 |
| 108 | 1.62000e-002 | 2.35059e-001 |
| 109 | 1.63500e-002 | 2.35083e-001 |
| 110 | 1.65000e-002 | 2.35107e-001 |
| 111 | 1.66500e-002 | 2.35131e-001 |
| 112 | 1.68000e-002 | 2.35155e-001 |
| 113 | 1.69500e-002 | 2.35179e-001 |
| 114 | 1.71000e-002 | 2.35203e-001 |
| 115 | 1.72500e-002 | 2.35227e-001 |
| 116 | 1.74000e-002 | 2.35251e-001 |
| 117 | 1.75500e-002 | 2.35274e-001 |
| 118 | 1.77000e-002 | 2.35298e-001 |
| 119 | 1.78500e-002 | 2.35322e-001 |
| 120 | 1.80000e-002 | 2.35346e-001 |
| 121 | 1.81500e-002 | 2.35370e-001 |
| 122 | 1.83000e-002 | 2.35394e-001 |
| 123 | 1.84500e-002 | 2.35418e-001 |
| 124 | 1.86000e-002 | 2.35442e-001 |
| 125 | 1.87500e-002 | 2.35466e-001 |
| 126 | 1.89000e-002 | 2.35490e-001 |
| 127 | 1.90500e-002 | 2.35514e-001 |
| 128 | 1.92000e-002 | 2.35538e-001 |
| 129 | 1.93500e-002 | 2.35562e-001 |
| 130 | 1.95000e-002 | 2.35586e-001 |
| 131 | 1.96500e-002 | 2.35610e-001 |
| 132 | 1.98000e-002 | 2.35634e-001 |
| 133 | 1.99500e-002 | 2.35658e-001 |
| 134 | 2.01000e-002 | 2.35682e-001 |
| 135 | 2.02500e-002 | 2.35706e-001 |

**PROJECT TITLE :**

| | | | | |
|---|---|---|---|---|
| MIDAS | Company | | Client | |
| | Author | Nicola | File Name | US1B - scuola muscoline - PE - PO - 06.txt |

| | | |
|---|---|---|
| 136 | 2.04000e-002 | 2.35730e-001 |
| 137 | 2.05500e-002 | 2.35754e-001 |
| 138 | 2.07000e-002 | 2.35778e-001 |
| 139 | 2.08500e-002 | 2.35802e-001 |
| 140 | 2.10000e-002 | 2.35826e-001 |
| 141 | 2.11500e-002 | 2.35850e-001 |
| 142 | 2.13000e-002 | 2.35874e-001 |
| 143 | 2.14500e-002 | 2.33626e-001 |
| 144 | 2.16000e-002 | 2.33679e-001 |
| 145 | 2.17500e-002 | 2.33732e-001 |
| 146 | 2.19000e-002 | 2.33775e-001 |
| 147 | 2.20500e-002 | 2.33812e-001 |
| 148 | 2.22000e-002 | 2.33849e-001 |
| 149 | 2.23500e-002 | 2.33886e-001 |
| 150 | 2.25000e-002 | 2.33923e-001 |
| 151 | 2.26500e-002 | 2.33960e-001 |
| 152 | 2.28000e-002 | 2.33997e-001 |
| 153 | 2.29500e-002 | 2.31908e-001 |
| 154 | 2.31000e-002 | 2.31958e-001 |
| 155 | 2.32500e-002 | 2.32007e-001 |
| 156 | 2.34000e-002 | 2.32056e-001 |
| 157 | 2.35500e-002 | 2.32106e-001 |
| 158 | 2.37000e-002 | 2.32155e-001 |
| 159 | 2.38500e-002 | 2.32205e-001 |
| 160 | 2.40000e-002 | 2.32254e-001 |
| 161 | 2.41500e-002 | 2.30490e-001 |
| 162 | 2.43000e-002 | 2.02625e-001 |
| 163 | 2.44500e-002 | 2.03224e-001 |
| 164 | 2.46000e-002 | 2.03811e-001 |
| 165 | 2.47500e-002 | 2.04381e-001 |
| 166 | 2.49000e-002 | 2.04916e-001 |
| 167 | 2.50500e-002 | 2.05441e-001 |
| 168 | 2.52000e-002 | 2.05819e-001 |
| 169 | 2.53500e-002 | 2.05868e-001 |

**PROJECT TITLE :**

| | Company | | Client | |
|---|---|---|---|---|
| MIDAS | Author | Nicola | File Name | US1B - scuola muscoline - PE - PO - 06.txt |

| | | |
|---|---|---|
| 170 | 2.55000e-002 | 2.05917e-001 |
| 171 | 2.56500e-002 | 2.05966e-001 |
| 172 | 2.58000e-002 | 2.06016e-001 |
| 173 | 2.59500e-002 | 2.03980e-001 |
| 174 | 2.61000e-002 | 1.83852e-001 |
| 175 | 2.62500e-002 | 1.83921e-001 |
| 176 | 2.64000e-002 | 1.75665e-001 |
| 177 | 2.65500e-002 | 1.75748e-001 |
| 178 | 2.67000e-002 | 1.75809e-001 |
| 179 | 2.68500e-002 | 1.75858e-001 |
| 180 | 2.70000e-002 | 1.75906e-001 |
| 181 | 2.71500e-002 | 1.74037e-001 |
| 182 | 2.73000e-002 | 1.74084e-001 |
| 183 | 2.74500e-002 | 1.74121e-001 |
| 184 | 2.76000e-002 | 1.74155e-001 |
| 185 | 2.77500e-002 | 1.74189e-001 |
| 186 | 2.79000e-002 | 1.70585e-001 |
| 187 | 2.80500e-002 | 1.70618e-001 |
| 188 | 2.82000e-002 | 1.70652e-001 |
| 189 | 2.83500e-002 | 1.70686e-001 |
| 190 | 2.85000e-002 | 1.70719e-001 |
| 191 | 2.86500e-002 | 1.70751e-001 |
| 192 | 2.88000e-002 | 1.70781e-001 |
| 193 | 2.89500e-002 | 1.70812e-001 |
| 194 | 2.91000e-002 | 9.06453e-002 |
| 195 | 2.92500e-002 | 9.08368e-002 |
| 196 | 2.94000e-002 | 9.10284e-002 |
| 197 | 2.95500e-002 | 9.12200e-002 |
| 198 | 2.97000e-002 | 9.14115e-002 |
| 199 | 2.98500e-002 | 9.16031e-002 |
| 200 | 3.00000e-002 | 9.17946e-002 |

| | | |
|---|---|---|
| Min : | 1.50000e-005 | 2.60579e-003 |
| Max : | 7.65000e-003 | 2.48081e-001 |

**PROJECT TITLE :**

| | | | | |
|---|---|---|---|---|
| MIDAS | Company | | Client | |
| | Author | Nicola | File Name | US1B - scuola muscoline - PE - PO - 06.txt |

```
 ** midas Gen Pushover Curve Data **
_____________________________________________

[ Target Displacement ]
* Disp. Control Node : 183
* Direction : DY
* Load Pattern Type : Accerelation
* SLO- Demand, Capacity, Step, Remark : 0.011912, 0.006231, 47, N/A
* SLD- Demand, Capacity, Step, Remark : 0.011912, 0.009300, 47, N/A
* SLV- Demand, Capacity, Step, Remark : 0.011912, -, 47, -
* SLC- Demand, Capacity, Step, Remark : 0.011912, -, 47, -
_____________________________________________

- Target Displacement of SLO
  m* = 182.248
  Gamma = 1
  Fy* = 436.738
  T* = 0.209585
  Se(T*) = 0.648g
  det* = 0.00707012
  qu = 2.6516
  Tc = 0.44
  dt* = 0.0119116 (short period range)
  dt = 0.0119116

- Target Displacement of SLD
  m* = 182.248
  Gamma = 1
  Fy* = 436.738
  T* = 0.209585
  Se(T*) = 0.648g
  det* = 0.00707012
  qu = 2.6516
  Tc = 0.44
  dt* = 0.0119116 (short period range)
  dt = 0.0119116

- Target Displacement of SLV
  m* = 182.248
  Gamma = 1
  Fy* = 436.738
  T* = 0.209585
  Se(T*) = 0.648g
  det* = 0.00707012
  qu = 2.6516
  Tc = 0.44
  dt* = 0.0119116 (short period range)
  dt = 0.0119116

- Target Displacement of SLC
  m* = 182.248
  Gamma = 1
  Fy* = 436.738
  T* = 0.209585
  Se(T*) = 0.648g
  det* = 0.00707012
  qu = 2.6516
  Tc = 0.44
  dt* = 0.0119116 (short period range)
  dt = 0.0119116
_____________________________________________

[ Spectral Displacement(Sd) vs. Spectral Acceleration(Sa) ]

Load Case :GU2 -Y   Unit:  kN,m


 Node : 183   Direction : DY   Mode 1
```

**PROJECT TITLE :**

| | | | | |
|---|---|---|---|---|
| MIDAS | Company | | Client | |
| | Author | Nicola | File Name | US1B - scuola muscoline - PE - PO - 06.txt |

| Step Status of Step | Spectral Displacement(Sd) | Spectral Acceleration(Sa) |
|---|---|---|
| 0 | 1.50000e-005 | 1.67701e-003 |
| 1 | 1.50000e-004 | 1.67701e-002 |
| 2 | 3.00000e-004 | 3.35401e-002 |
| 3 | 4.50000e-004 | 5.03102e-002 |
| 4 | 6.00000e-004 | 6.70802e-002 |
| 5 | 7.50000e-004 | 8.22440e-002 |
| 6 | 9.00000e-004 | 9.55949e-002 |
| 7 | 1.05000e-003 | 1.08946e-001 |
| 8 | 1.20000e-003 | 1.22297e-001 |
| 9 | 1.35000e-003 | 1.34710e-001 |
| 10 | 1.50000e-003 | 1.44905e-001 |
| 11 | 1.65000e-003 | 1.53252e-001 |
| 12 | 1.80000e-003 | 1.59997e-001 |
| 13 | 1.95000e-003 | 1.66736e-001 |
| 14 | 2.10000e-003 | 1.73475e-001 |
| 15 | 2.25000e-003 | 1.80058e-001 |
| 16 | 2.40000e-003 | 1.86127e-001 |
| 17 | 2.55000e-003 | 1.90703e-001 |
| 18 | 2.70000e-003 | 1.94611e-001 |
| 19 | 2.85000e-003 | 1.98300e-001 |
| 20 | 3.00000e-003 | 2.01988e-001 |
| 21 | 3.15000e-003 | 2.05676e-001 |
| 22 | 3.30000e-003 | 2.09229e-001 |
| 23 | 3.45000e-003 | 2.12491e-001 |
| 24 | 3.60000e-003 | 2.15305e-001 |
| 25 | 3.75000e-003 | 2.18119e-001 |
| 26 | 3.90000e-003 | 2.20933e-001 |
| 27 | 4.05000e-003 | 2.23747e-001 |
| 28 | 4.20000e-003 | 2.26557e-001 |
| 29 | 4.35000e-003 | 2.29308e-001 |
| 30 | 4.50000e-003 | 2.32011e-001 |
| 31 | 4.65000e-003 | 2.34649e-001 |

| | | | |
|---|---|---|---|
| 32 | 4.80000e-003 | 2.37230e-001 | |
| 33 | 4.95000e-003 | 2.39712e-001 | |
| 34 | 5.10000e-003 | 2.42195e-001 | |
| 35 | 5.25000e-003 | 2.44677e-001 | |
| 36 | 5.40000e-003 | 2.46372e-001 | |
| 37 | 5.55000e-003 | 2.47234e-001 | |
| 38 | 5.70000e-003 | 2.48096e-001 | |
| 39 | 5.85000e-003 | 2.48958e-001 | |
| 40 | 6.00000e-003 | 2.49820e-001 | |
| 41 | 6.15000e-003 | 2.50640e-001 | |
| 42 | 6.30000e-003 | 2.51426e-001 | |
| 43 | 6.45000e-003 | 2.52206e-001 | |
| 44 | 6.60000e-003 | 2.52960e-001 | |
| 45 | 6.75000e-003 | 2.53714e-001 | |
| 46 | 6.90000e-003 | 2.54469e-001 | |
| 47 | 7.05000e-003 | 2.55101e-001 | SLO(Dem.)SLD(Dem.)SLV(Dem.)SLC(Dem.) |
| 48 | 7.20000e-003 | 2.55622e-001 | |
| 49 | 7.35000e-003 | 2.56142e-001 | |
| 50 | 7.50000e-003 | 2.56525e-001 | |
| 51 | 7.65000e-003 | 2.56821e-001 | |
| 52 | 7.80000e-003 | 2.57117e-001 | |
| 53 | 7.95000e-003 | 2.57403e-001 | |
| 54 | 8.10000e-003 | 2.57630e-001 | |
| 55 | 8.25000e-003 | 2.57762e-001 | |
| 56 | 8.40000e-003 | 2.57893e-001 | |
| 57 | 8.55000e-003 | 2.58024e-001 | |
| 58 | 8.70000e-003 | 2.58156e-001 | |
| 59 | 8.85000e-003 | 2.58287e-001 | |
| 60 | 9.00000e-003 | 2.58418e-001 | |
| 61 | 9.15000e-003 | 2.58550e-001 | |
| 62 | 9.30000e-003 | 2.58669e-001 | SLD(Cap.) |
| 63 | 9.45000e-003 | 2.49428e-001 | |
| 64 | 9.60000e-003 | 2.49639e-001 | |
| 65 | 9.75000e-003 | 2.49715e-001 | |
| 66 | 9.90000e-003 | 2.49766e-001 | |

**PROJECT TITLE :**

| | | | | |
|---|---|---|---|---|
| MIDAS | Company | | Client | |
| | Author | Nicola | File Name | US1B - scuola muscoline - PE - PO - 06.txt |

| | | |
|---|---|---|
| 67 | 1.00500e-002 | 2.49817e-001 |
| 68 | 1.02000e-002 | 2.49868e-001 |
| 69 | 1.03500e-002 | 2.49920e-001 |
| 70 | 1.05000e-002 | 2.49971e-001 |
| 71 | 1.06500e-002 | 2.50022e-001 |
| 72 | 1.08000e-002 | 2.50073e-001 |
| 73 | 1.09500e-002 | 2.50124e-001 |
| 74 | 1.11000e-002 | 2.50175e-001 |
| 75 | 1.12500e-002 | 2.50226e-001 |
| 76 | 1.14000e-002 | 2.50277e-001 |
| 77 | 1.15500e-002 | 2.50328e-001 |
| 78 | 1.17000e-002 | 2.50379e-001 |
| 79 | 1.18500e-002 | 2.50430e-001 |
| 80 | 1.20000e-002 | 2.50481e-001 |
| 81 | 1.21500e-002 | 2.50532e-001 |
| 82 | 1.23000e-002 | 2.50583e-001 |
| 83 | 1.24500e-002 | 2.50635e-001 |
| 84 | 1.26000e-002 | 2.50686e-001 |
| 85 | 1.27500e-002 | 2.50737e-001 |
| 86 | 1.29000e-002 | 2.50788e-001 |
| 87 | 1.30500e-002 | 2.50839e-001 |
| 88 | 1.32000e-002 | 2.50890e-001 |
| 89 | 1.33500e-002 | 2.50941e-001 |
| 90 | 1.35000e-002 | 2.50992e-001 |
| 91 | 1.36500e-002 | 2.51043e-001 |
| 92 | 1.38000e-002 | 2.51094e-001 |
| 93 | 1.39500e-002 | 2.51145e-001 |
| 94 | 1.41000e-002 | 2.43183e-001 |
| 95 | 1.42500e-002 | 2.43334e-001 |
| 96 | 1.44000e-002 | 2.43485e-001 |
| 97 | 1.45500e-002 | 2.43611e-001 |
| 98 | 1.47000e-002 | 2.43695e-001 |
| 99 | 1.48500e-002 | 2.43779e-001 |
| 100 | 1.50000e-002 | 2.43840e-001 |

**PROJECT TITLE :**

| | | | | |
|---|---|---|---|---|
| MIDAS | Company | | Client | |
| | Author | Nicola | File Name | US1B - scuola muscoline - PE - PO - 06.txt |

| | | |
|---|---|---|
| 101 | 1.51500e-002 | 2.43890e-001 |
| 102 | 1.53000e-002 | 2.43941e-001 |
| 103 | 1.54500e-002 | 2.43992e-001 |
| 104 | 1.56000e-002 | 2.44043e-001 |
| 105 | 1.57500e-002 | 2.44094e-001 |
| 106 | 1.59000e-002 | 2.44145e-001 |
| 107 | 1.60500e-002 | 2.44196e-001 |
| 108 | 1.62000e-002 | 2.44247e-001 |
| 109 | 1.63500e-002 | 2.44298e-001 |
| 110 | 1.65000e-002 | 2.44349e-001 |
| 111 | 1.66500e-002 | 2.44399e-001 |
| 112 | 1.68000e-002 | 2.44450e-001 |
| 113 | 1.69500e-002 | 2.44501e-001 |
| 114 | 1.71000e-002 | 2.44552e-001 |
| 115 | 1.72500e-002 | 2.44603e-001 |
| 116 | 1.74000e-002 | 2.44654e-001 |
| 117 | 1.75500e-002 | 2.44705e-001 |
| 118 | 1.77000e-002 | 2.44756e-001 |
| 119 | 1.78500e-002 | 2.44807e-001 |
| 120 | 1.80000e-002 | 2.44858e-001 |
| 121 | 1.81500e-002 | 2.44909e-001 |
| 122 | 1.83000e-002 | 2.44952e-001 |
| 123 | 1.84500e-002 | 2.44976e-001 |
| 124 | 1.86000e-002 | 2.45000e-001 |
| 125 | 1.87500e-002 | 2.45024e-001 |
| 126 | 1.89000e-002 | 2.45048e-001 |
| 127 | 1.90500e-002 | 2.45072e-001 |
| 128 | 1.92000e-002 | 2.45096e-001 |
| 129 | 1.93500e-002 | 2.45120e-001 |
| 130 | 1.95000e-002 | 2.45144e-001 |
| 131 | 1.96500e-002 | 2.45168e-001 |
| 132 | 1.98000e-002 | 2.45192e-001 |
| 133 | 1.99500e-002 | 2.45216e-001 |
| 134 | 2.01000e-002 | 2.45240e-001 |
| 135 | 2.02500e-002 | 2.45264e-001 |

**PROJECT TITLE :**

| | | | | |
|---|---|---|---|---|
| MIDAS | Company | | Client | |
| | Author | Nicola | File Name | US1B - scuola muscoline - PE - PO - 06.txt |

| | | |
|---|---|---|
| 136 | 2.04000e-002 | 2.45288e-001 |
| 137 | 2.05500e-002 | 2.45312e-001 |
| 138 | 2.07000e-002 | 2.45336e-001 |
| 139 | 2.08500e-002 | 2.45360e-001 |
| 140 | 2.10000e-002 | 2.45385e-001 |
| 141 | 2.11500e-002 | 2.45409e-001 |
| 142 | 2.13000e-002 | 2.45433e-001 |
| 143 | 2.14500e-002 | 2.45457e-001 |
| 144 | 2.16000e-002 | 2.45481e-001 |
| 145 | 2.17500e-002 | 2.45505e-001 |
| 146 | 2.19000e-002 | 2.45529e-001 |
| 147 | 2.20500e-002 | 2.45553e-001 |
| 148 | 2.22000e-002 | 2.45577e-001 |
| 149 | 2.23500e-002 | 2.45601e-001 |
| 150 | 2.25000e-002 | 2.45625e-001 |
| 151 | 2.26500e-002 | 2.45649e-001 |
| 152 | 2.28000e-002 | 2.45673e-001 |
| 153 | 2.29500e-002 | 2.45697e-001 |
| 154 | 2.31000e-002 | 2.45721e-001 |
| 155 | 2.32500e-002 | 2.45745e-001 |
| 156 | 2.34000e-002 | 2.45769e-001 |
| 157 | 2.35500e-002 | 2.45793e-001 |
| 158 | 2.37000e-002 | 2.45817e-001 |
| 159 | 2.38500e-002 | 2.45841e-001 |
| 160 | 2.40000e-002 | 2.45865e-001 |
| 161 | 2.41500e-002 | 2.43579e-001 |
| 162 | 2.43000e-002 | 2.43635e-001 |
| 163 | 2.44500e-002 | 2.43691e-001 |
| 164 | 2.46000e-002 | 2.41540e-001 |
| 165 | 2.47500e-002 | 2.41625e-001 |
| 166 | 2.49000e-002 | 2.41701e-001 |
| 167 | 2.50500e-002 | 2.41752e-001 |
| 168 | 2.52000e-002 | 2.41803e-001 |
| 169 | 2.53500e-002 | 2.41853e-001 |

| | | |
|---|---|---|
| 170 | 2.55000e-002 | 2.41904e-001 |
| 171 | 2.56500e-002 | 2.41955e-001 |
| 172 | 2.58000e-002 | 2.39822e-001 |
| 173 | 2.59500e-002 | 2.39878e-001 |
| 174 | 2.61000e-002 | 2.39934e-001 |
| 175 | 2.62500e-002 | 2.15397e-001 |
| 176 | 2.64000e-002 | 2.10140e-001 |
| 177 | 2.65500e-002 | 2.10720e-001 |
| 178 | 2.67000e-002 | 2.11299e-001 |
| 179 | 2.68500e-002 | 2.11809e-001 |
| 180 | 2.70000e-002 | 2.12176e-001 |
| 181 | 2.71500e-002 | 2.12542e-001 |
| 182 | 2.73000e-002 | 2.12903e-001 |
| 183 | 2.74500e-002 | 2.13262e-001 |
| 184 | 2.76000e-002 | 2.13607e-001 |
| 185 | 2.77500e-002 | 2.13951e-001 |
| 186 | 2.79000e-002 | 2.14296e-001 |
| 187 | 2.80500e-002 | 2.14641e-001 |
| 188 | 2.82000e-002 | 2.14931e-001 |
| 189 | 2.83500e-002 | 2.15205e-001 |
| 190 | 2.85000e-002 | 2.15448e-001 |
| 191 | 2.86500e-002 | 2.15692e-001 |
| 192 | 2.88000e-002 | 2.15936e-001 |
| 193 | 2.89500e-002 | 2.13388e-001 |
| 194 | 2.91000e-002 | 2.13628e-001 |
| 195 | 2.92500e-002 | 2.13858e-001 |
| 196 | 2.94000e-002 | 2.14088e-001 |
| 197 | 2.95500e-002 | 2.14222e-001 |
| 198 | 2.97000e-002 | 1.81440e-001 |
| 199 | 2.98500e-002 | 1.81510e-001 |
| 200 | 3.00000e-002 | 1.79462e-001 |

| | | |
|---|---|---|
| Min : | 1.50000e-005 | 1.67701e-003 |
| Max : | 9.30000e-003 | 2.58669e-001 |

| | | | |
|---|---|---|---|
| Impresa: | | Pagina: | 1 |
| Progettista: | | Progetto: | |
| Indirizzo: | | Contratto N°: | |
| Telefono I Fax: | \| | Data: | 09/06/2020 |
| E-mail: | | | |

**Commenti del progettista:**

## 1 Dati da inserire

| | |
|---|---|
| **Tipo e dimensione dell'ancorante:** | **HIT-RE 500 V3 + HIT-V-F (8.8) M20** |
| Return period (service life in years): | 50 |
| Profondità di posa effettiva: | $h_{ef,act}$ = 200 mm ($h_{ef,limit}$ = - mm) |
| Materiale: | 8.8 |
| Certificazione No.: | Dati Tecnici Hilti |
| Emesso I Valido: | - \| - |
| Prova: | metodo di calcolo Esteso EN 1992-4, Chimico |
| Fissaggio distanziato: | - (Spessore della piastra raccomandato: non calcolato) |
| Profilo: | |
| Materiale base: | fessurato calcestruzzo, C12/15, $f_{c,cyl}$ = 12.00 N/mm$^2$; h = 400 mm, Temp. Breve/Lungo: 0/0 °C |
| **Installazione:** | **Foro eseguito con perforatore, Condizioni di installazione: asciutto** |
| Armatura: | nessuna armatura o interasse tra le armature >= 150 mm (qualunque Ø) o >= 100 mm (Ø <= 10 mm) senza armatura di bordo longitudinale |

[R] - Il calcolo dell'ancoraggio presuppone la presenza di una piastra di ancoraggio rigida.

**Geometria [mm] & Carichi [kN, kNm]**

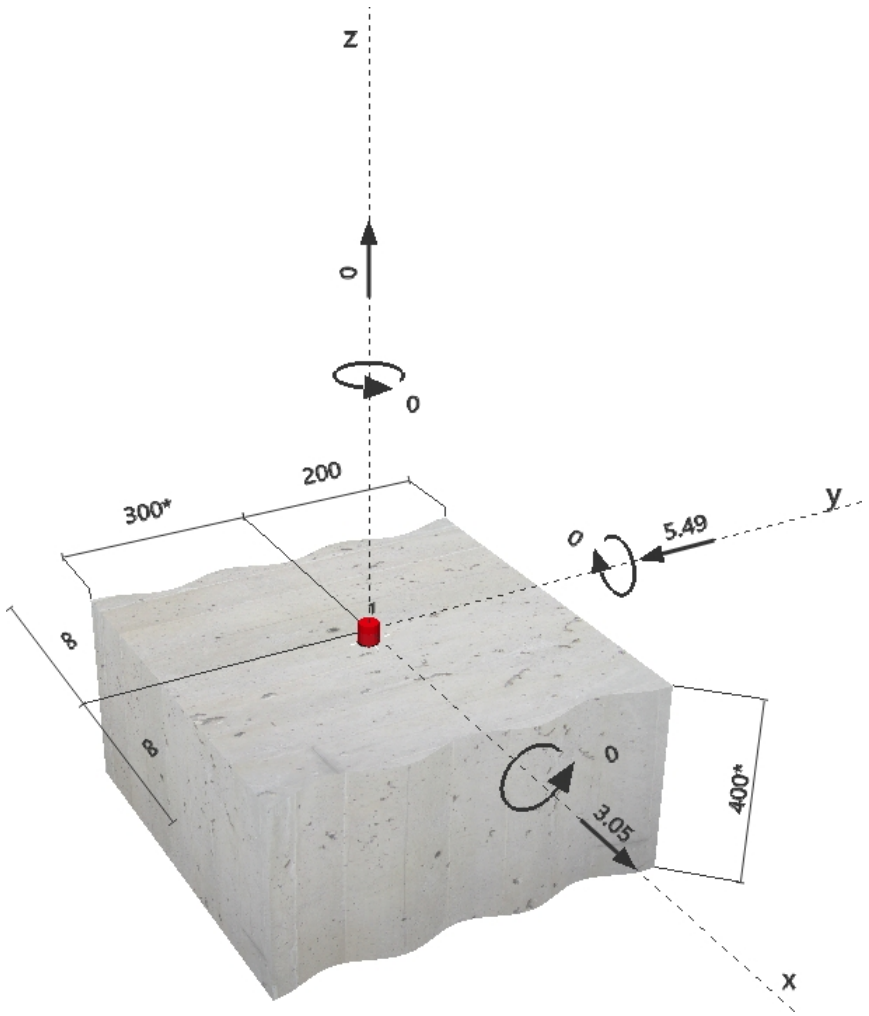



PROFIS Anchor ( c ) 2003-2009 Hilti AG, FL-9494 Schaan Hilti è un marchio registrato di Hilti AG, Schaan

| | | | |
|---|---|---|---|
| Impresa: | | Pagina: | 2 |
| Progettista: | | Progetto: | |
| Indirizzo: | | Contratto N°: | |
| Telefono I Fax: | \| | Data: | 09/06/2020 |
| E-mail: | | | |

### 1.1 Carichi permamenti

| $N_{sus}$ [kN] | $M_{x,sus}$ [kNm] | $M_{y,sus}$ [kNm] |
|---|---|---|
| 0.000 | 0.000 | 0.000 |

## 2 Condizione di carico/Carichi risultanti sull'ancorante (ULS)

Condizione di carico: Carichi di progetto

**Carichi sull'ancorante [kN]**
Trazione: (+ Trazione, - Compressione)

| Ancorante | Trazione | Taglio | Taglio in dir. x | Taglio in dir. y |
|---|---|---|---|---|
| 1 | 0.000 | 6.280 | 3.050 | -5.490 |

Compressione max. nel calcestruzzo: - [‰]
Max. sforzo di compressione nel calcestruzzo: - [N/mm$^2$]
risultante delle forze di trazione nel (x/y)=(0/0): 0.000 [kN]
risultante delle forze di compressione (x/y)=(0/0): 0.000 [kN]


PROFIS Anchor ( c ) 2003-2009 Hilti AG, FL-9494 Schaan Hilti è un marchio registrato di Hilti AG, Schaan

| | | | |
|---|---|---|---|
| Impresa: | | Pagina: | 3 |
| Progettista: | | Progetto: | |
| Indirizzo: | | Contratto N°: | |
| Telefono I Fax: | \| | Data: | 09/06/2020 |
| E-mail: | | | |

## 3 Carico di trazione (EN 1992-4, Sezione 7.2.1)

| | Carico [kN] | Resistenza [kN] | Utilizzo $\beta_N$ [%] | Stato |
|---|---|---|---|---|
| Rottura dell'acciaio* | N/A | N/A | N/A | N/A |
| Rottura combinata conica del calcestruzzo e per sfilamento** | N/A | N/A | N/A | N/A |
| Rottura conica del calcestruzzo** | N/A | N/A | N/A | N/A |
| Fessurazione** | N/A | N/A | N/A | N/A |

*ancorante più sollecitato **gruppo di ancoranti (ancoranti sollecitati)


PROFIS Anchor ( c ) 2003-2009 Hilti AG, FL-9494 Schaan Hilti è un marchio registrato di Hilti AG, Schaan

| | | | |
|---|---|---|---|
| Impresa: | | Pagina: | 4 |
| Progettista: | | Progetto: | |
| Indirizzo: | | Contratto N°: | |
| Telefono I Fax: | \| | Data: | 09/06/2020 |
| E-mail: | | | |

## 4 Carico di taglio (EN 1992-4, Sezione 7.2.2)

| | Carico [kN] | Resistenza [kN] | Utilizzo $\beta_V$ [%] | Stato |
|---|---|---|---|---|
| Rottura dell'acciaio (senza braccio di leva)* | 6.280 | 78.400 | 9 | OK |
| Rottura dell'acciaio (con braccio di leva)* | N/A | N/A | N/A | N/A |
| Rottura per pryout** | 6.280 | 75.444 | 9 | OK |
| Rottura del bordo del calcestruzzo in direzione y-** | 6.280 | 36.849 | 18 | OK |

*ancorante più sollecitato **gruppo di ancoranti (ancoranti specifici)

### 4.1 Rottura dell'acciaio (senza braccio di leva)

| $V^0_{Rk,s}$ [kN] | $k_7$ | $V_{Rk,s}$ [kN] | $\gamma_{M,s}$ | $V_{Rd,s}$ [kN] | $V_{Ed}$ [kN] |
|---|---|---|---|---|---|
| 98.000 | 1.000 | 98.000 | 1.250 | 78.400 | 6.280 |

### 4.2 Rottura per pryout (cono del calcestruzzo)

| $A_{c,N}$ [mm²] | $A^0_{c,N}$ [mm²] | $c_{cr,N}$ [mm] | $s_{cr,N}$ [mm] | $f_{c,cyl}$ [N/mm²] | $k_8$ |
|---|---|---|---|---|---|
| 300 000 | 360 000 | 300 | 600 | 12.00 | 2.000 |

| $e_{c1,V}$ [mm] | $\psi_{ec1,N}$ | $e_{c2,V}$ [mm] | $\psi_{ec2,N}$ | $\psi_{s,N}$ | $\psi_{re,N}$ | $\psi_{M,N}$ |
|---|---|---|---|---|---|---|
| 0 | 1.000 | 0 | 1.000 | 0.900 | 1.000 | 1.000 |

| $k_1$ | $N^0_{Rk,c}$ [kN] | $\gamma_{M,c,p}$ | $V_{Rd,cp}$ [kN] | $V_{Ed}$ [kN] |
|---|---|---|---|---|
| 7.700 | 75.444 | 1.500 | 75.444 | 6.280 |

### 4.3 Rottura del bordo del calcestruzzo in direzione y-

| $l_f$ [mm] | $d_{nom}$ [mm] | $k_9$ | $\alpha$ | $\beta$ | $f_{c,cyl}$ [N/mm²] |
|---|---|---|---|---|---|
| 200 | 20.0 | 1.700 | 0.082 | 0.058 | 12.00 |

| $c_1$ [mm] | $A_{c,V}$ [mm²] | $A^0_{c,V}$ [mm²] |
|---|---|---|
| 300 | 360 000 | 405 000 |

| $\psi_{s,V}$ | $\psi_{h,V}$ | $\psi_{\alpha,V}$ | $e_{c,V}$ [mm] | $\psi_{ec,V}$ | $\psi_{re,V}$ |
|---|---|---|---|---|---|
| 1.000 | 1.061 | 1.102 | 0 | 1.000 | 1.000 |

| $V^0_{Rk,c}$ [kN] | $k_T$ | $\gamma_{M,c}$ | $V_{Rd,c}$ [kN] | $V_{Ed}$ [kN] |
|---|---|---|---|---|
| 53.190 | 1.0 | 1.500 | 36.849 | 6.280 |

## 5 Spostamenti (ancorante più sollecitato)

Carichi a breve termine:

$N_{Sk}$ = 0.000 [kN] $\delta_N$ = 0.000 [mm]

$V_{Sk}$ = 4.652 [kN] $\delta_V$ = 0.186 [mm]

$\delta_{NV}$ = 0.186 [mm]

Carichi a lungo termine:

$N_{Sk}$ = 0.000 [kN] $\delta_N$ = 0.000 [mm]

$V_{Sk}$ = 4.652 [kN] $\delta_V$ = 0.279 [mm]

$\delta_{NV}$ = 0.279 [mm]

Commenti: Gli spostamenti a trazione risultano validi con metà del valore della coppia di serraggio richiesta per non fessurato calcestruzzo! Gli spostamenti a taglio sono validi trascurando l'attrito tra il calcestruzzo e la piastra d'ancoraggio! Lo spazio derivante dal foro eseguito con perforatore e dalle tolleranze dei fori non viene considerato in questo calcolo!

Gli spostamenti ammissibili dell'ancorante dipendono dalla struttura fissata e devono essere definiti dal progettista!


PROFIS Anchor ( c ) 2003-2009 Hilti AG, FL-9494 Schaan Hilti è un marchio registrato di Hilti AG, Schaan

| | | | |
|---|---|---|---|
| Impresa: | | Pagina: | 5 |
| Progettista: | | Progetto: | |
| Indirizzo: | | Contratto N°: | |
| Telefono I Fax: | \| | Data: | 09/06/2020 |
| E-mail: | | | |

## 6 Attenzione

- Fenomeni di ridistribuzione dei carichi sugli ancoranti derivanti da eventuali deformazioni elastiche della piastra non sono presi in considerazione. Si assume una piastra di ancoraggio sufficientemente rigida in modo che non risulti deformabile sotto l'azione di carichi!
- La verifica del trasferimento dei carichi all'interno del materiale di base è richiesta in accordo con EN 1992-4, Allegato A!
- Il progetto è valido solo se le dimensioni del foro nell'elemento da fissare non è maggiore del valore dato in tabella 6.1 di EN 1992-4! Per diametri maggiori del foro vedere sezione 6.2.2 di EN 1992-4!
- La lista accessori inclusa in questo report di calcolo è da ritenersi solo come informativa dell'utente. In ogni caso, le istruzioni d'uso fornite con il prodotto dovranno essere rispettate per garantire una corretta installazione.
- Per la determinazione di Psi_re,v (rottura di bordo del calcestruzzo) si assume un copriferro per le armature di bordo c = 30 mm
- L'adesione chimica caratteristica dipende dalle temperature di breve e di lungo periodo.
- Contattare Hilti per verificare la fornitura delle barre HIT-V.
- L'armatura di bordo non è necessaria per evitare la modalità di rottura per fessurazione (splitting)
- The characteristic bond resistances depend on the return period (service life in years): 50

# L'ancoraggio risulta verificato!


PROFIS Anchor ( c ) 2003-2009 Hilti AG, FL-9494 Schaan Hilti è un marchio registrato di Hilti AG, Schaan

| | | | |
|---|---|---|---|
| Impresa: | | Pagina: | 6 |
| Progettista: | | Progetto: | |
| Indirizzo: | | Contratto N°: | |
| Telefono I Fax: | \| | Data: | 09/06/2020 |
| E-mail: | | | |

## 7 Dati relativi all'installazione

Piastra d'ancoraggio, acciaio: -
Profilo: -
Diametro del foro nella piastra: -
Spessore della piastra (input): -
Spessore della piastra raccomandato: -
Metodo di perforazione: Foro con perforazione a roto-percussione
Pulizia: E' necessaria una pulizia accurata del foro (Premium cleaning)

Tipo e dimensione dell'ancorante: HIT-RE 500 V3 + HIT-V-F (8.8) M20
Coppia di serraggio: 0.150 kNm
Diametro del foro nel materiale base: 22 mm
Profondità del foro nel materiale base: 200 mm
Spessore minimo del materiale base: 244 mm

### 7.1 Accessori richiesti

| Perforazione | Pulizia | Posa |
|---|---|---|
| • Idoneo per rotopercussione<br>• Dimensione appropriata della punta del trapano | • Aria compressa con i relativi accessori necessari per soffiare a partire dal fondo del foro.<br>• Diametro appropriato dello scovolino | • Il dispenser include il portacartucce e il miscelatore<br>• Chiave dinamometrica |

**Coordinate dell'ancorante [mm]**

| Ancorante | x | y | $c_{-x}$ | $c_{+x}$ | $c_{-y}$ | $c_{+y}$ |
|---|---|---|---|---|---|---|
| 1 | 0 | 0 | - | - | 300 | 200 |

## 8 Osservazioni; doveri del cliente

- Tutte le informazioni e i dati contenuti nel Software riguardano solamente l'uso di prodotti Hilti e si basano su principi, formule e norme di sicurezza in conformità con le indicazioni tecniche, di funzionamento, montaggio e assemblaggio, ecc. della Hilti che devono essere rigorosamente rispettate da parte dell'utente. Tutt i valori in esso contenuti sono valori medi, quindi vanno effettuati test specifici prima di utilizzare il prodotto Hilti in questione. I risultati dei calcoli effettuati mediante il software si basano essenzialmente sui dati che l'utente ha inserito. Di conseguenza l'utente è l'unico responsabile per l'assenza di errori, la completezza e la pertinenza dei dati che vanno immessi. Inoltre, l'utente ha la responsabilità di far controllare e correggere i risultati dei calcoli da parte di un esperto, con particolare riguardo al rispetto di norme e autorizzazioni, prima di utilizzarli per uno scopo specifico. Il software serve solo come un compendio per interpretare le norme e i permessi, senza alcuna garanzia circa l'assenza di errori, la correttezza e la pertinenza dei risultati o di idoneità per una specifica applicazione.
- L'utente deve applicare tutti gli accorgimenti necessari e ragionevoli per prevenire o limitare i danni causati dal software. In particolare, l'utente deve organizzare un backup periodico dei programmi e dei dati e, se necessario, effettuare gli aggiornamenti del software offerti da Hilti in maniera regolare. Se non si utilizza la funzione di aggiornamento automatico del software, l'utente deve assicurarsi di utilizzare l'ultima versione e quindi di mantenere aggiornato il Software effettuando aggiornamenti manuali dal sito web Hilti. Hilti non è responsabile per le conseguenze derivanti da una violazione colposa di responsabilità da parte dell'utente, come il recupero di dati o programmi persi o danneggiati.


PROFIS Anchor ( c ) 2003-2009 Hilti AG, FL-9494 Schaan Hilti è un marchio registrato di Hilti AG, Schaan

| | | | |
|---|---|---|---|
| Impresa: | | Pagina: | 1 |
| Progettista: | | Progetto: | |
| Indirizzo: | | Contratto N°: | |
| Telefono I Fax: | \| | Data: | 04/06/2020 |
| E-mail: | | | |

**Commenti del progettista:**

## 1 Dati da inserire

| | |
|---|---|
| **Tipo e dimensione dell'ancorante:** | **HIT-RE 500 V3 + HIT-V-F (8.8) M20** |
| Return period (service life in years): | 50 |
| Profondità di posa effettiva: | $h_{ef,act}$ = 200 mm ($h_{ef,limit}$ = - mm) |
| Materiale: | 8.8 |
| Certificazione No.: | ETA 16/0143 |
| Emesso I Valido: | 14/05/2019 \| - |
| Prova: | metodo di calcolo EN 1992-4, Chimico |
| Fissaggio distanziato: | - (Spessore della piastra raccomandato: non calcolato) |
| Profilo: | |
| Materiale base: | fessurato calcestruzzo, C20/25, $f_{c,cyl}$ = 20.00 N/mm$^2$; h = 400 mm, Temp. Breve/Lungo: 0/0 °C |
| **Installazione:** | **Foro eseguito con perforatore, Condizioni di installazione: asciutto** |
| Armatura: | nessuna armatura o interasse tra le armature >= 150 mm (qualunque Ø) o >= 100 mm (Ø <= 10 mm) senza armatura di bordo longitudinale |

[R] - Il calcolo dell'ancoraggio presuppone la presenza di una piastra di ancoraggio rigida.

**Geometria [mm] & Carichi [kN, kNm]**

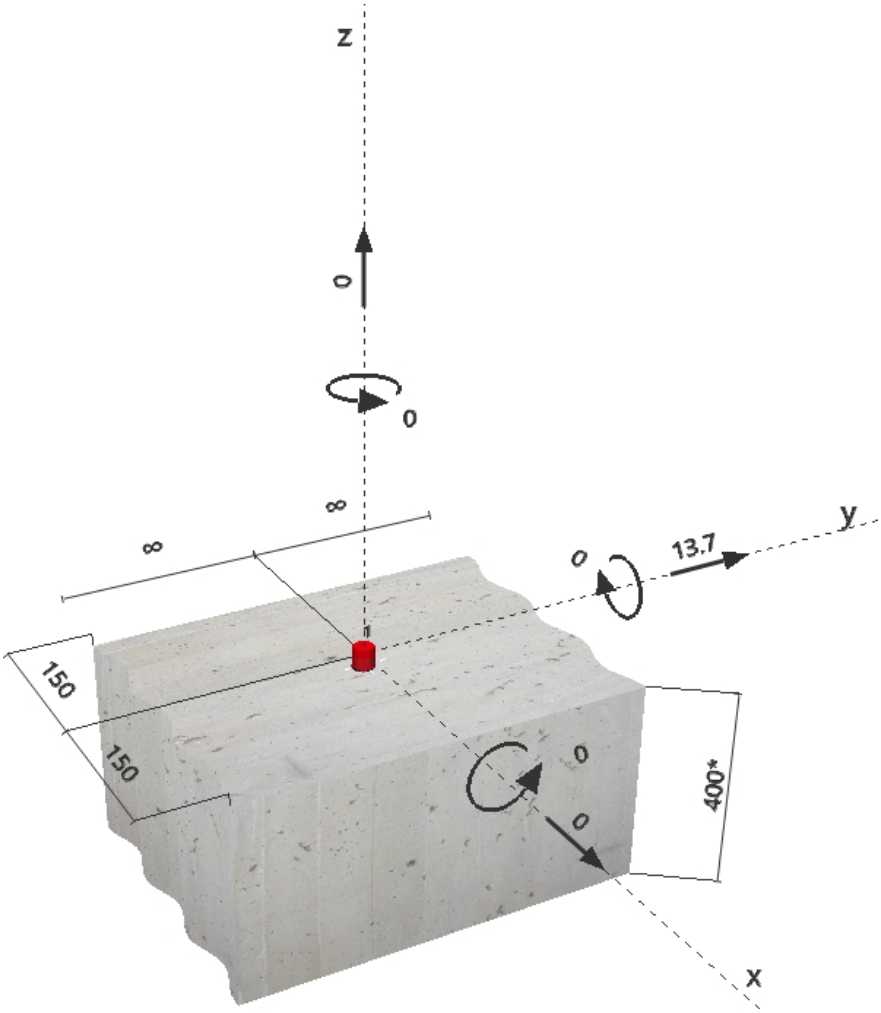



PROFIS Anchor ( c ) 2003-2009 Hilti AG, FL-9494 Schaan Hilti è un marchio registrato di Hilti AG, Schaan

| | | | |
|---|---|---|---|
| Impresa: | | Pagina: | 2 |
| Progettista: | | Progetto: | |
| Indirizzo: | | Contratto N°: | |
| Telefono I Fax: | \| | Data: | 04/06/2020 |
| E-mail: | | | |

### 1.1 Carichi permamenti

| $N_{sus}$ [kN] | $M_{x,sus}$ [kNm] | $M_{y,sus}$ [kNm] |
|---|---|---|
| 0.000 | 0.000 | 0.000 |

## 2 Condizione di carico/Carichi risultanti sull'ancorante (ULS)

Condizione di carico: Carichi di progetto

**Carichi sull'ancorante [kN]**
Trazione: (+ Trazione, - Compressione)

| Ancorante | Trazione | Taglio | Taglio in dir. x | Taglio in dir. y |
|---|---|---|---|---|
| 1 | 0.000 | 13.700 | 0.000 | 13.700 |

Compressione max. nel calcestruzzo: - [‰]
Max. sforzo di compressione nel calcestruzzo: - [N/mm$^2$]
risultante delle forze di trazione nel (x/y)=(0/0): 0.000 [kN]
risultante delle forze di compressione (x/y)=(0/0): 0.000 [kN]


PROFIS Anchor ( c ) 2003-2009 Hilti AG, FL-9494 Schaan Hilti è un marchio registrato di Hilti AG, Schaan

| | | | |
|---|---|---|---|
| Impresa: | | Pagina: | 3 |
| Progettista: | | Progetto: | |
| Indirizzo: | | Contratto N°: | |
| Telefono I Fax: | \| | Data: | 04/06/2020 |
| E-mail: | | | |

## 3 Carico di trazione (EN 1992-4, Sezione 7.2.1)

| | Carico [kN] | Resistenza [kN] | Utilizzo $\beta_N$ [%] | Stato |
|---|---|---|---|---|
| Rottura dell'acciaio* | N/A | N/A | N/A | N/A |
| Rottura combinata conica del calcestruzzo e per sfilamento** | N/A | N/A | N/A | N/A |
| Rottura conica del calcestruzzo** | N/A | N/A | N/A | N/A |
| Fessurazione** | N/A | N/A | N/A | N/A |

*ancorante più sollecitato **gruppo di ancoranti (ancoranti sollecitati)


PROFIS Anchor ( c ) 2003-2009 Hilti AG, FL-9494 Schaan Hilti è un marchio registrato di Hilti AG, Schaan

| | | | |
|---|---|---|---|
| Impresa: | | Pagina: | 4 |
| Progettista: | | Progetto: | |
| Indirizzo: | | Contratto N°: | |
| Telefono I Fax: | \| | Data: | 04/06/2020 |
| E-mail: | | | |

## 4 Carico di taglio (EN 1992-4, Sezione 7.2.2)

| | Carico [kN] | Resistenza [kN] | Utilizzo $\beta_V$ [%] | Stato |
|---|---|---|---|---|
| Rottura dell'acciaio (senza braccio di leva)* | 13.700 | 78.400 | 18 | OK |
| Rottura dell'acciaio (con braccio di leva)* | N/A | N/A | N/A | N/A |
| Rottura per pryout** | 13.700 | 55.192 | 25 | OK |
| Rottura del bordo del calcestruzzo in direzione x+** | 13.700 | 37.502 | 37 | OK |

*ancorante più sollecitato **gruppo di ancoranti (ancoranti specifici)

### 4.1 Rottura dell'acciaio (senza braccio di leva)

| $V^0_{Rk,s}$ [kN] | $k_7$ | $V_{Rk,s}$ [kN] | $\gamma_{M,s}$ | $V_{Rd,s}$ [kN] | $V_{Ed}$ [kN] |
|---|---|---|---|---|---|
| 98.000 | 1.000 | 98.000 | 1.250 | 78.400 | 13.700 |

### 4.2 Rottura per pryout (cono del calcestruzzo)

| $A_{c,N}$ [mm²] | $A^0_{c,N}$ [mm²] | $c_{cr,N}$ [mm] | $s_{cr,N}$ [mm] | $f_{c,cyl}$ [N/mm²] | $k_8$ |
|---|---|---|---|---|---|
| 180 000 | 360 000 | 300 | 600 | 20.00 | 2.000 |

| $e_{c1,V}$ [mm] | $\psi_{ec1,N}$ | $e_{c2,V}$ [mm] | $\psi_{ec2,N}$ | $\psi_{s,N}$ | $\psi_{re,N}$ | $\psi_{M,N}$ |
|---|---|---|---|---|---|---|
| 0 | 1.000 | 0 | 1.000 | 0.850 | 1.000 | 1.000 |

| $k_1$ | $N^0_{Rk,c}$ [kN] | $\gamma_{M,c,p}$ | $V_{Rd,cp}$ [kN] | $V_{Ed}$ [kN] |
|---|---|---|---|---|
| 7.700 | 97.398 | 1.500 | 55.192 | 13.700 |

### 4.3 Rottura del bordo del calcestruzzo in direzione x+

| $l_f$ [mm] | $d_{nom}$ [mm] | $k_9$ | $\alpha$ | $\beta$ | $f_{c,cyl}$ [N/mm²] |
|---|---|---|---|---|---|
| 200 | 20.0 | 1.700 | 0.115 | 0.067 | 20.00 |

| $c_1$ [mm] | $A_{c,V}$ [mm²] | $A^0_{c,V}$ [mm²] |
|---|---|---|
| 150 | 101 250 | 101 250 |

| $\psi_{s,V}$ | $\psi_{h,V}$ | $\psi_{\alpha,V}$ | $e_{c,V}$ [mm] | $\psi_{ec,V}$ | $\psi_{re,V}$ |
|---|---|---|---|---|---|
| 1.000 | 1.000 | 2.000 | 0 | 1.000 | 1.000 |

| $V^0_{Rk,c}$ [kN] | $k_T$ | $\gamma_{M,c}$ | $V_{Rd,c}$ [kN] | $V_{Ed}$ [kN] |
|---|---|---|---|---|
| 28.126 | 1.0 | 1.500 | 37.502 | 13.700 |

## 5 Spostamenti (ancorante più sollecitato)

Carichi a breve termine:

$N_{Sk}$ = 0.000 [kN] $\delta_N$ = 0.000 [mm]

$V_{Sk}$ = 10.148 [kN] $\delta_V$ = 0.406 [mm]

$\delta_{NV}$ = 0.406 [mm]

Carichi a lungo termine:

$N_{Sk}$ = 0.000 [kN] $\delta_N$ = 0.000 [mm]

$V_{Sk}$ = 10.148 [kN] $\delta_V$ = 0.609 [mm]

$\delta_{NV}$ = 0.609 [mm]

Commenti: Gli spostamenti a trazione risultano validi con metà del valore della coppia di serraggio richiesta per non fessurato calcestruzzo! Gli spostamenti a taglio sono validi trascurando l'attrito tra il calcestruzzo e la piastra d'ancoraggio! Lo spazio derivante dal foro eseguito con perforatore e dalle tolleranze dei fori non viene considerato in questo calcolo!

Gli spostamenti ammissibili dell'ancorante dipendono dalla struttura fissata e devono essere definiti dal progettista!


PROFIS Anchor ( c ) 2003-2009 Hilti AG, FL-9494 Schaan Hilti è un marchio registrato di Hilti AG, Schaan

| | | | |
|---|---|---|---|
| Impresa: | | Pagina: | 5 |
| Progettista: | | Progetto: | |
| Indirizzo: | | Contratto N°: | |
| Telefono I Fax: | \| | Data: | 04/06/2020 |
| E-mail: | | | |

## 6 Attenzione

- Fenomeni di ridistribuzione dei carichi sugli ancoranti derivanti da eventuali deformazioni elastiche della piastra non sono presi in considerazione. Si assume una piastra di ancoraggio sufficientemente rigida in modo che non risulti deformabile sotto l'azione di carichi!
- La verifica del trasferimento dei carichi all'interno del materiale di base è richiesta in accordo con EN 1992-4, Allegato A!
- Il progetto è valido solo se le dimensioni del foro nell'elemento da fissare non è maggiore del valore dato in tabella 6.1 di EN 1992-4! Per diametri maggiori del foro vedere sezione 6.2.2 di EN 1992-4!
- La lista accessori inclusa in questo report di calcolo è da ritenersi solo come informativa dell'utente. In ogni caso, le istruzioni d'uso fornite con il prodotto dovranno essere rispettate per garantire una corretta installazione.
- Per la determinazione di Psi_re,v (rottura di bordo del calcestruzzo) si assume un copriferro per le armature di bordo c = 30 mm
- L'adesione chimica caratteristica dipende dalle temperature di breve e di lungo periodo.
- Contattare Hilti per verificare la fornitura delle barre HIT-V.
- L'armatura di bordo non è necessaria per evitare la modalità di rottura per fessurazione (splitting)
- The characteristic bond resistances depend on the return period (service life in years): 50

# L'ancoraggio risulta verificato!


PROFIS Anchor ( c ) 2003-2009 Hilti AG, FL-9494 Schaan Hilti è un marchio registrato di Hilti AG, Schaan

| | | | |
|---|---|---|---|
| Impresa: | | Pagina: | 6 |
| Progettista: | | Progetto: | |
| Indirizzo: | | Contratto N°: | |
| Telefono I Fax: | \| | Data: | 04/06/2020 |
| E-mail: | | | |

## 7 Dati relativi all'installazione

Piastra d'ancoraggio, acciaio: -
Profilo: -
Diametro del foro nella piastra: -
Spessore della piastra (input): -
Spessore della piastra raccomandato: -
Metodo di perforazione: Foro con perforazione a roto-percussione
Pulizia: E' necessaria una pulizia accurata del foro (Premium cleaning)

Tipo e dimensione dell'ancorante: HIT-RE 500 V3 + HIT-V-F (8.8) M20
Coppia di serraggio: 0.150 kNm
Diametro del foro nel materiale base: 22 mm
Profondità del foro nel materiale base: 200 mm
Spessore minimo del materiale base: 244 mm

### 7.1 Accessori richiesti

| Perforazione | Pulizia | Posa |
|---|---|---|
| • Idoneo per rotopercussione<br>• Dimensione appropriata della punta del trapano | • Aria compressa con i relativi accessori necessari per soffiare a partire dal fondo del foro.<br>• Diametro appropriato dello scovolino | • Il dispenser include il portacartucce e il miscelatore<br>• Chiave dinamometrica |

**Coordinate dell'ancorante [mm]**

| Ancorante | x | y | $c_{-x}$ | $c_{+x}$ | $c_{-y}$ | $c_{+y}$ |
|---|---|---|---|---|---|---|
| 1 | 0 | 0 | 150 | 150 | - | - |

## 8 Osservazioni; doveri del cliente

- Tutte le informazioni e i dati contenuti nel Software riguardano solamente l'uso di prodotti Hilti e si basano su principi, formule e norme di sicurezza in conformità con le indicazioni tecniche, di funzionamento, montaggio e assemblaggio, ecc. della Hilti che devono essere rigorosamente rispettate da parte dell'utente. Tutt i valori in esso contenuti sono valori medi, quindi vanno effettuati test specifici prima di utilizzare il prodotto Hilti in questione. I risultati dei calcoli effettuati mediante il software si basano essenzialmente sui dati che l'utente ha inserito. Di conseguenza l'utente è l'unico responsabile per l'assenza di errori, la completezza e la pertinenza dei dati che vanno immessi. Inoltre, l'utente ha la responsabilità di far controllare e correggere i risultati dei calcoli da parte di un esperto, con particolare riguardo al rispetto di norme e autorizzazioni, prima di utilizzarli per uno scopo specifico. Il software serve solo come un compendio per interpretare le norme e i permessi, senza alcuna garanzia circa l'assenza di errori, la correttezza e la pertinenza dei risultati o di idoneità per una specifica applicazione.
- L'utente deve applicare tutti gli accorgimenti necessari e ragionevoli per prevenire o limitare i danni causati dal software. In particolare, l'utente deve organizzare un backup periodico dei programmi e dei dati e, se necessario, effettuare gli aggiornamenti del software offerti da Hilti in maniera regolare. Se non si utilizza la funzione di aggiornamento automatico del software, l'utente deve assicurarsi di utilizzare l'ultima versione e quindi di mantenere aggiornato il Software effettuando aggiornamenti manuali dal sito web Hilti. Hilti non è responsabile per le conseguenze derivanti da una violazione colposa di responsabilità da parte dell'utente, come il recupero di dati o programmi persi o danneggiati.


PROFIS Anchor ( c ) 2003-2009 Hilti AG, FL-9494 Schaan Hilti è un marchio registrato di Hilti AG, Schaan

| | | | |
|---|---|---|---|
| Impresa: | | Pagina: | 1 |
| Progettista: | | Progetto: | |
| Indirizzo: | | Contratto N°: | |
| Telefono I Fax: | \| | Data: | 09/06/2020 |
| E-mail: | | | |

**Commenti del progettista:**

## 1 Dati da inserire

| | |
|---|---|
| **Tipo e dimensione dell'ancorante:** | **HIT-RE 500 V3 + HIT-V-F (8.8) M20** |
| Return period (service life in years): | 50 |
| Profondità di posa effettiva: | $h_{ef,act}$ = 200 mm ($h_{ef,limit}$ = - mm) |
| Materiale: | 8.8 |
| Certificazione No.: | Dati Tecnici Hilti |
| Emesso I Valido: | - \| - |
| Prova: | metodo di calcolo Esteso EN 1992-4, Chimico |
| Fissaggio distanziato: | $e_b$ = 0 mm (Senza distanziamento); t = 10 mm |
| Piastra d'ancoraggio: | $l_x$ x $l_y$ x t = 200 mm x 250 mm x 10 mm; (Spessore della piastra raccomandato: non calcolato |
| Profilo: | nessun profilo |
| Materiale base: | fessurato calcestruzzo, C16/20, $f_{c,cyl}$ = 16.00 N/mm$^2$; h = 300 mm, Temp. Breve/Lungo: 0/0 °C |
| **Installazione:** | **Foro eseguito con perforatore, Condizioni di installazione: asciutto** |
| Armatura: | nessuna armatura o interasse tra le armature >= 150 mm (qualunque Ø) o >= 100 mm (Ø <= 10 mm) senza armatura di bordo longitudinale |

[R] - Il calcolo dell'ancoraggio presuppone la presenza di una piastra di ancoraggio rigida.

**Geometria [mm] & Carichi [kN, kNm]**

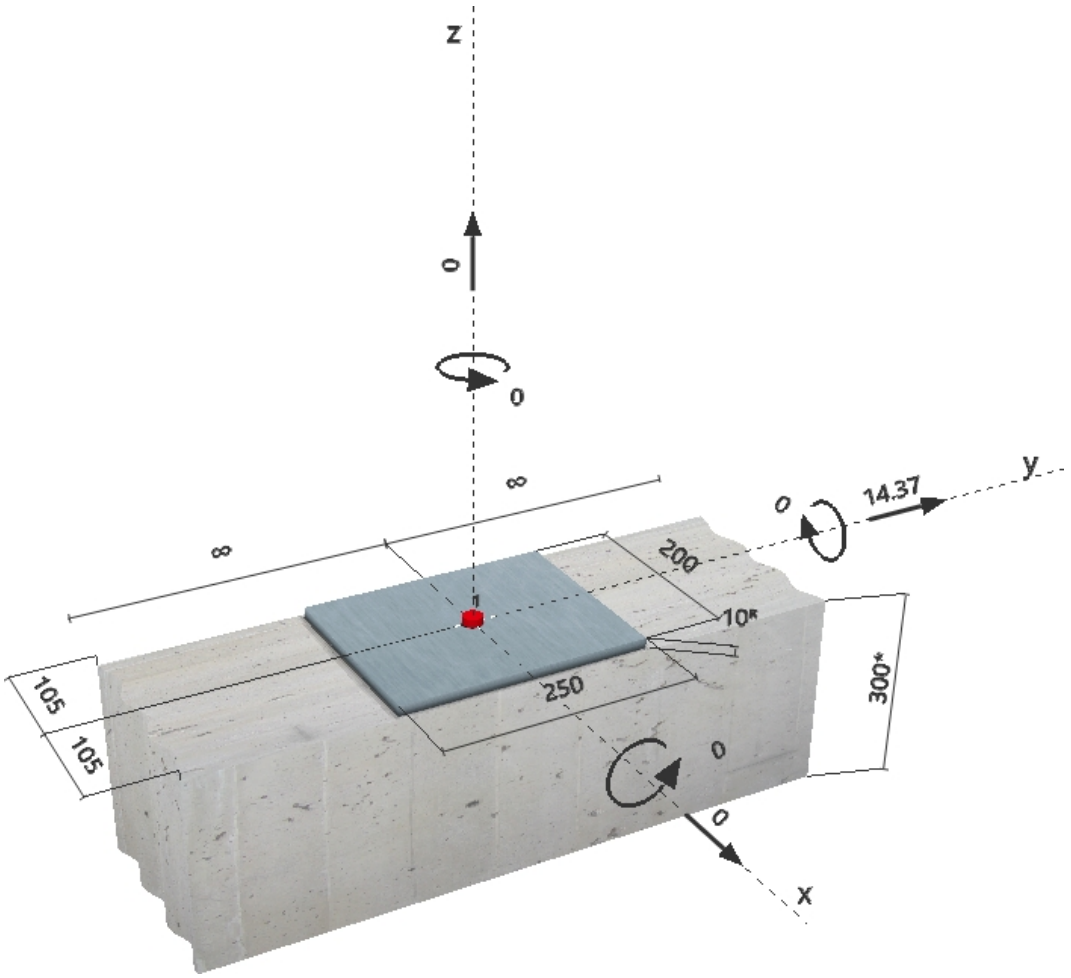



PROFIS Anchor ( c ) 2003-2009 Hilti AG, FL-9494 Schaan Hilti è un marchio registrato di Hilti AG, Schaan

| | | | |
|---|---|---|---|
| Impresa: | | Pagina: | 2 |
| Progettista: | | Progetto: | |
| Indirizzo: | | Contratto N°: | |
| Telefono I Fax: | \| | Data: | 09/06/2020 |
| E-mail: | | | |

### 1.1 Carichi permamenti

| $N_{sus}$ [kN] | $M_{x,sus}$ [kNm] | $M_{y,sus}$ [kNm] |
|---|---|---|
| 0.000 | 0.000 | 0.000 |

## 2 Condizione di carico/Carichi risultanti sull'ancorante (ULS)

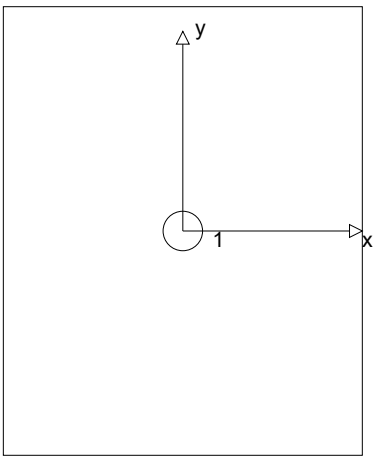


Condizione di carico: Carichi di progetto

**Carichi sull'ancorante [kN]**
Trazione: (+ Trazione, - Compressione)

| Ancorante | Trazione | Taglio | Taglio in dir. x | Taglio in dir. y |
|---|---|---|---|---|
| 1 | 0.000 | 14.370 | 0.000 | 14.370 |

Compressione max. nel calcestruzzo: - [‰]
Max. sforzo di compressione nel calcestruzzo: - [N/mm$^2$]
risultante delle forze di trazione nel (x/y)=(0/0): 0.000 [kN]
risultante delle forze di compressione (x/y)=(0/0): 0.000 [kN]

Le forze di ancoraggio vengono calcolate presupponendo una piastra di ancoraggio rigida.


PROFIS Anchor ( c ) 2003-2009 Hilti AG, FL-9494 Schaan Hilti è un marchio registrato di Hilti AG, Schaan

| | | | |
|---|---|---|---|
| Impresa: | | Pagina: | 3 |
| Progettista: | | Progetto: | |
| Indirizzo: | | Contratto N°: | |
| Telefono I Fax: | \| | Data: | 09/06/2020 |
| E-mail: | | | |

## 3 Carico di trazione (EN 1992-4, Sezione 7.2.1)

| | Carico [kN] | Resistenza [kN] | Utilizzo $\beta_N$ [%] | Stato |
|---|---|---|---|---|
| Rottura dell'acciaio* | N/A | N/A | N/A | N/A |
| Rottura combinata conica del calcestruzzo e per sfilamento** | N/A | N/A | N/A | N/A |
| Rottura conica del calcestruzzo** | N/A | N/A | N/A | N/A |
| Fessurazione** | N/A | N/A | N/A | N/A |

*ancorante più sollecitato **gruppo di ancoranti (ancoranti sollecitati)


PROFIS Anchor ( c ) 2003-2009 Hilti AG, FL-9494 Schaan Hilti è un marchio registrato di Hilti AG, Schaan

| | | | |
|---|---|---|---|
| Impresa: | | Pagina: | 4 |
| Progettista: | | Progetto: | |
| Indirizzo: | | Contratto N°: | |
| Telefono I Fax: | \| | Data: | 09/06/2020 |
| E-mail: | | | |

## 4 Carico di taglio (EN 1992-4, Sezione 7.2.2)

| | Carico [kN] | Resistenza [kN] | Utilizzo $\beta_V$ [%] | Stato |
|---|---|---|---|---|
| Rottura dell'acciaio (senza braccio di leva)* | 14.370 | 78.400 | 19 | OK |
| Rottura dell'acciaio (con braccio di leva)* | N/A | N/A | N/A | N/A |
| Rottura per pryout** | 14.370 | 32.726 | 44 | OK |
| Rottura del bordo del calcestruzzo in direzione x+** | 14.370 | 21.575 | 67 | OK |

*ancorante più sollecitato **gruppo di ancoranti (ancoranti specifici)

### 4.1 Rottura dell'acciaio (senza braccio di leva)

| $V^0_{Rk,s}$ [kN] | $k_7$ | $V_{Rk,s}$ [kN] | $\gamma_{M,s}$ | $V_{Rd,s}$ [kN] | $V_{Ed}$ [kN] |
|---|---|---|---|---|---|
| 98.000 | 1.000 | 98.000 | 1.250 | 78.400 | 14.370 |

### 4.2 Rottura per pryout (cono del calcestruzzo)

| $A_{c,N}$ [mm²] | $A^0_{c,N}$ [mm²] | $c_{cr,N}$ [mm] | $s_{cr,N}$ [mm] | $f_{c,cyl}$ [N/mm²] | $k_8$ |
|---|---|---|---|---|---|
| 126 000 | 360 000 | 300 | 600 | 16.00 | 2.000 |

| $e_{c1,V}$ [mm] | $\psi_{ec1,N}$ | $e_{c2,V}$ [mm] | $\psi_{ec2,N}$ | $\psi_{s,N}$ | $\psi_{re,N}$ | $\psi_{M,N}$ |
|---|---|---|---|---|---|---|
| 0 | 1.000 | 0 | 1.000 | 0.805 | 1.000 | 1.000 |

| $k_1$ | $N^0_{Rk,c}$ [kN] | $\gamma_{M,c,p}$ | $V_{Rd,cp}$ [kN] | $V_{Ed}$ [kN] |
|---|---|---|---|---|
| 7.700 | 87.116 | 1.500 | 32.726 | 14.370 |

### 4.3 Rottura del bordo del calcestruzzo in direzione x+

| $l_f$ [mm] | $d_{nom}$ [mm] | $k_9$ | $\alpha$ | $\beta$ | $f_{c,cyl}$ [N/mm²] |
|---|---|---|---|---|---|
| 200 | 20.0 | 1.700 | 0.138 | 0.072 | 16.00 |

| $c_1$ [mm] | $A_{c,V}$ [mm²] | $A^0_{c,V}$ [mm²] |
|---|---|---|
| 105 | 49 613 | 49 613 |

| $\psi_{s,V}$ | $\psi_{h,V}$ | $\psi_{\alpha,V}$ | $e_{c,V}$ [mm] | $\psi_{ec,V}$ | $\psi_{re,V}$ |
|---|---|---|---|---|---|
| 1.000 | 1.000 | 2.000 | 0 | 1.000 | 1.000 |

| $V^0_{Rk,c}$ [kN] | $k_T$ | $\gamma_{M,c}$ | $V_{Rd,c}$ [kN] | $V_{Ed}$ [kN] |
|---|---|---|---|---|
| 16.181 | 1.0 | 1.500 | 21.575 | 14.370 |

## 5 Spostamenti (ancorante più sollecitato)

Carichi a breve termine:

$N_{Sk}$ = 0.000 [kN] $\delta_N$ = 0.000 [mm]

$V_{Sk}$ = 10.644 [kN] $\delta_V$ = 0.426 [mm]

$\delta_{NV}$ = 0.426 [mm]

Carichi a lungo termine:

$N_{Sk}$ = 0.000 [kN] $\delta_N$ = 0.000 [mm]

$V_{Sk}$ = 10.644 [kN] $\delta_V$ = 0.639 [mm]

$\delta_{NV}$ = 0.639 [mm]

Commenti: Gli spostamenti a trazione risultano validi con metà del valore della coppia di serraggio richiesta per non fessurato calcestruzzo! Gli spostamenti a taglio sono validi trascurando l'attrito tra il calcestruzzo e la piastra d'ancoraggio! Lo spazio derivante dal foro eseguito con perforatore e dalle tolleranze dei fori non viene considerato in questo calcolo!

Gli spostamenti ammissibili dell'ancorante dipendono dalla struttura fissata e devono essere definiti dal progettista!


PROFIS Anchor ( c ) 2003-2009 Hilti AG, FL-9494 Schaan Hilti è un marchio registrato di Hilti AG, Schaan

| | | | |
|---|---|---|---|
| Impresa: | | Pagina: | 5 |
| Progettista: | | Progetto: | |
| Indirizzo: | | Contratto N°: | |
| Telefono I Fax: | \| | Data: | 09/06/2020 |
| E-mail: | | | |

## 6 Attenzione

- Fenomeni di ridistribuzione dei carichi sugli ancoranti derivanti da eventuali deformazioni elastiche della piastra non sono presi in considerazione. Si assume una piastra di ancoraggio sufficientemente rigida in modo che non risulti deformabile sotto l'azione di carichi!
- La verifica del trasferimento dei carichi all'interno del materiale di base è richiesta in accordo con EN 1992-4, Allegato A!
- Il progetto è valido solo se le dimensioni del foro nell'elemento da fissare non è maggiore del valore dato in tabella 6.1 di EN 1992-4! Per diametri maggiori del foro vedere sezione 6.2.2 di EN 1992-4!
- La lista accessori inclusa in questo report di calcolo è da ritenersi solo come informativa dell'utente. In ogni caso, le istruzioni d'uso fornite con il prodotto dovranno essere rispettate per garantire una corretta installazione.
- Per la determinazione di Psi_re,v (rottura di bordo del calcestruzzo) si assume un copriferro per le armature di bordo c = 30 mm
- L'adesione chimica caratteristica dipende dalle temperature di breve e di lungo periodo.
- Contattare Hilti per verificare la fornitura delle barre HIT-V.
- L'armatura di bordo non è necessaria per evitare la modalità di rottura per fessurazione (splitting)
- The characteristic bond resistances depend on the return period (service life in years): 50

# L'ancoraggio risulta verificato!


PROFIS Anchor ( c ) 2003-2009 Hilti AG, FL-9494 Schaan Hilti è un marchio registrato di Hilti AG, Schaan

| | | | |
|---|---|---|---|
| Impresa: | | Pagina: | 6 |
| Progettista: | | Progetto: | |
| Indirizzo: | | Contratto N°: | |
| Telefono I Fax: | \| | Data: | 09/06/2020 |
| E-mail: | | | |

# 7 Dati relativi all'installazione

Piastra d'ancoraggio, acciaio: -
Profilo: nessun profilo
Diametro del foro nella piastra: $d_f$ = 22 mm
Spessore della piastra (input): 10 mm
Spessore della piastra raccomandato: non calcolato
Metodo di perforazione: Foro con perforazione a roto-percussione
Pulizia: E' necessaria una pulizia accurata del foro (Premium cleaning)

Tipo e dimensione dell'ancorante: HIT-RE 500 V3 + HIT-V-F (8.8) M20
Coppia di serraggio: 0.150 kNm
Diametro del foro nel materiale base: 22 mm
Profondità del foro nel materiale base: 200 mm
Spessore minimo del materiale base: 244 mm

## 7.1 Accessori richiesti

| Perforazione | Pulizia | Posa |
|---|---|---|
| • Idoneo per rotopercussione<br>• Dimensione appropriata della punta del trapano | • Aria compressa con i relativi accessori necessari per soffiare a partire dal fondo del foro.<br>• Diametro appropriato dello scovolino | • Il dispenser include il portacartucce e il miscelatore<br>• Chiave dinamometrica |

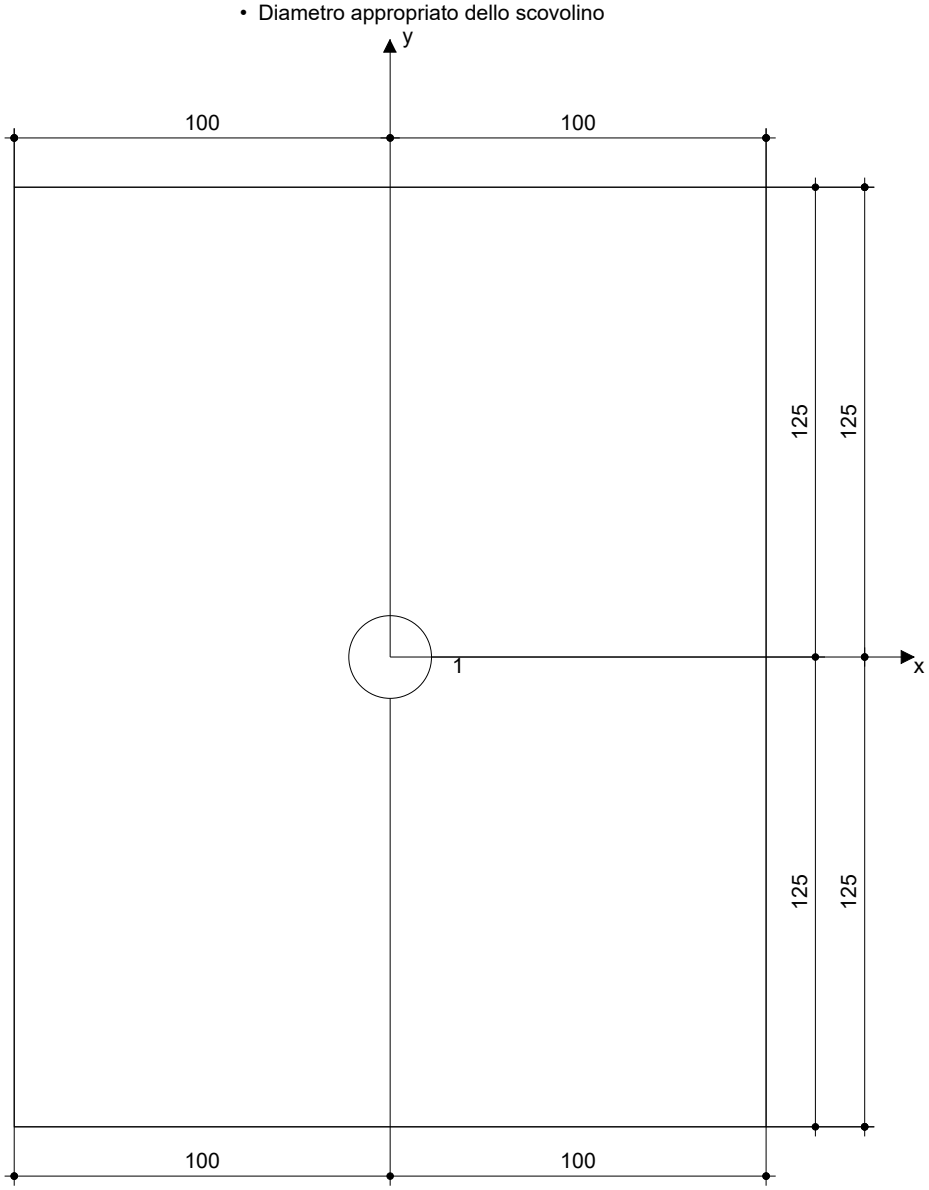


**Coordinate dell'ancorante [mm]**

| Ancorante | x | y | $c_{-x}$ | $c_{+x}$ | $c_{-y}$ | $c_{+y}$ |
|---|---|---|---|---|---|---|
| 1 | 0 | 0 | 105 | 105 | - | - |


PROFIS Anchor ( c ) 2003-2009 Hilti AG, FL-9494 Schaan Hilti è un marchio registrato di Hilti AG, Schaan

| | | | |
|---|---|---|---|
| Impresa: | | Pagina: | 7 |
| Progettista: | | Progetto: | |
| Indirizzo: | | Contratto N°: | |
| Telefono I Fax: | \| | Data: | 09/06/2020 |
| E-mail: | | | |

## 8 Osservazioni; doveri del cliente

- Tutte le informazioni e i dati contenuti nel Software riguardano solamente l'uso di prodotti Hilti e si basano su principi, formule e norme di sicurezza in conformità con le indicazioni tecniche, di funzionamento, montaggio e assemblaggio, ecc. della Hilti che devono essere rigorosamente rispettate da parte dell'utente. Tutt i valori in esso contenuti sono valori medi, quindi vanno effettuati test specifici prima di utilizzare il prodotto Hilti in questione. I risultati dei calcoli effettuati mediante il software si basano essenzialmente sui dati che l'utente ha inserito. Di conseguenza l'utente è l'unico responsabile per l'assenza di errori, la completezza e la pertinenza dei dati che vanno immessi. Inoltre, l'utente ha la responsabilità di far controllare e correggere i risultati dei calcoli da parte di un esperto, con particolare riguardo al rispetto di norme e autorizzazioni, prima di utilizzarli per uno scopo specifico. Il software serve solo come un compendio per interpretare le norme e i permessi, senza alcuna garanzia circa l'assenza di errori, la correttezza e la pertinenza dei risultati o di idoneità per una specifica applicazione.
- L'utente deve applicare tutti gli accorgimenti necessari e ragionevoli per prevenire o limitare i danni causati dal software. In particolare, l'utente deve organizzare un backup periodico dei programmi e dei dati e, se necessario, effettuare gli aggiornamenti del software offerti da Hilti in maniera regolare. Se non si utilizza la funzione di aggiornamento automatico del software, l'utente deve assicurarsi di utilizzare l'ultima versione e quindi di mantenere aggiornato il Software effettuando aggiornamenti manuali dal sito web Hilti. Hilti non è responsabile per le conseguenze derivanti da una violazione colposa di responsabilità da parte dell'utente, come il recupero di dati o programmi persi o danneggiati.


PROFIS Anchor ( c ) 2003-2009 Hilti AG, FL-9494 Schaan  Hilti è un marchio registrato di Hilti AG, Schaan

## 2.4. Allineamento C

### *2.4.1 Nuovo sistema sismoresistente*

**PROJECT TITLE :**

| | | | | |
|---|---|---|---|---|
| MIDAS | Company | | Client | |
| | Author | Nicola | File Name | allin - scuola muscoline - PE - PO - 00.mgt |

```
;---------------------------------------------------------------------------
;  midas Gen Text(MGT) File.
;  Date : 2020/6/15
;---------------------------------------------------------------------------

*VERSION
   8.8.1

*UNIT    ; Unit System
; FORCE, LENGTH, HEAT, TEMPER
   KN   , M, BTU, F

*PROJINFO    ; Project Information
; PROJECT, REVISION, USER, EMAIL, ADDRESS, TEL, FAX, CLIENT, TITLE, ENGINEER, EDATE
    ; One Line per Data
; CHECK1, CDATE1, CHECK2, CDATE2, CHECK3, CDATE3, APPROVE, ADATE, COMMENT
    ; One Line per Data
   USER=Nicola
   ADDRESS=DiMoRe

*STRUCTYPE    ; Structure Type
; iSTYP, iMASS, iSMAS, bMASSOFFSET, bSELFWEIGHT, GRAV, TEMPER, bALIGNBEAM, bALIGNSLAB,
 bROTRIGID
     2, 1, 1, NO, YES, 9.806, 0, NO, NO, YES

*REBAR-MATL-CODE    ; Rebar Material Code
; CONC_CODE, CONC_MDB, SRC_CODE, SRC_MDB
 NTC08(RC), B450C, ASTM(RC), Grade 60

*NODE    ; Nodes
; iNO, X, Y, Z
    89, 3.69999537783395, 16.6249995830378, -1
    90, 3.69999537783293, 12.3349995830378, -1
   186, 3.69999537783293, 12.3349995830378, 3.35
   192, 3.69999537783395, 16.6249995830378, 3.35
   249, 3.69999537783395, 20.5999995830378, -1
   250, 3.69999537783206, 20.5999995830378, 3.35
   253, 3.69999537783289, 12.7010418908233, 3.35
   466, 3.69999537783293, 12.3349995830378, 2.75
   467, 3.69999537783395, 16.6249995830378, 2.75
   468, 3.69999537783206, 20.5999995830378, 2.75
   469, 3.69999537783293, 12.3349995830378, 3.05
   470, 3.69999537783395, 16.6249995830378, 3.05
   471, 3.69999537783206, 20.5999995830378, 3.05
   472, 3.69999537783395, 17.0449995830378, 3.05
   473, 3.69999537783293, 12.9099995830378, 3.05
   475, 3.69999537783206, 20.4199995830378, 3.05
   476, 3.69999537783395, 16.2049995830378, 3.05
   477, 4.00499537783395, 16.6249995830378, -1
   478, 4.00499537783395, 16.6249995830378, 3.35

*ELEMENT    ; Elements
; iEL, TYPE, iMAT, iPRO, iN1, iN2, ANGLE, iSUB,                      ; Frame  Element
; iEL, TYPE, iMAT, iPRO, iN1, iN2, ANGLE, iSUB, EXVAL, EXVAL2, bLMT ; Comp/Tens Truss
; iEL, TYPE, iMAT, iPRO, iN1, iN2, iN3, iN4, iSUB, iWID , LCAXIS    ; Planar Element
; iEL, TYPE, iMAT, iPRO, iN1, iN2, iN3, iN4, iN5, iN6, iN7, iN8     ; Solid  Element
    14, BEAM  ,    1,   108,    90,   466,    90,     0
    15, BEAM  ,    1,   114,    89,   467,    90,     0
    16, BEAM  ,    1,    19,   249,   468,     0,     0
  6038, BEAM  ,    6,   701,   186,   253,     0,     0
  6046, BEAM  ,    6,   703,   253,   192,     0,     0
  6057, BEAM  ,    6,   703,   192,   250,     0,     0
```

```
  6114, BEAM  ,    2,   108,   466,   469,    90,     0
  6115, BEAM  ,    2,   114,   467,   470,    90,     0
  6116, BEAM  ,    2,    19,   468,   471,     0,     0
  6117, BEAM  ,    2,   108,   469,   186,    90,     0
  6118, BEAM  ,    2,   114,   470,   192,    90,     0
  6119, BEAM  ,    2,    19,   471,   250,     0,     0
  6120, BEAM  ,    2,   709,   469,   473,     0,     0
  6121, BEAM  ,    2,   709,   470,   472,     0,     0
  6122, BEAM  ,    1,   709,   472,   475,     0,     0
  6123, BEAM  ,    1,   709,   473,   476,     0,     0
  6125, BEAM  ,    2,   709,   475,   471,     0,     0
  6126, BEAM  ,    2,   709,   476,   470,     0,     0
  6127, BEAM  ,    7,    22,   477,   478,    90,     0

*GROUP    ; Group
; NAME, NODE_LIST, ELEM_LIST, PLANE_TYPE
   Midas     , , , 0
   SPUTTANATI, , , 0
   P2-P3 CA  , , , 0
   Linee sezione (D), , , 0

*BNDR-GROUP    ; Boundary Group
; NAME, AUTOTYPE
 fasce, 0
 pilastrini, 0

*MATERIAL    ; Material
; iMAT, TYPE, MNAME, SPHEAT, HEATCO, PLAST, TUNIT, bMASS, DAMPRATIO, [DATA1]
 ; STEEL, CONC, ALUMINUM, USER
; iMAT, TYPE, MNAME, SPHEAT, HEATCO, PLAST, TUNIT, bMASS, DAMPRATIO, [DATA2], [DATA2]
 ; SRC
; [DATA1] : 1, STANDARD, CODE/PRODUCT, DB, USEELAST, ELAST
; [DATA1] : 2, ELAST, POISN, THERMAL, DEN, MASS
; [DATA1] : 3, Ex, Ey, Ez, Tx, Ty, Tz, Sxy, Sxz, Syz, Pxy, Pxz, Pyz, DEN, MASS
 ; Orthotropic
; [DATA2] : 1, STANDARD, CODE/PRODUCT, DB, USEELAST, ELAST or 2, ELAST, POISN, THERMAL
, DEN, MASS
    1, USER , MA                , 0, 0, , C, NO, 0.05, 2, 1.5000e+006,  0.45, 0.0000e+
000,    18,     0
    2, USER , MA rigid          , 0, 0, , C, NO, 0.05, 2, 1.5000e+008,  0.45, 0.0000e+
000,     9,     0
    3, USER , MB                , 0, 0, , C, NO, 0.05, 2, 3.6000e+006,  0.45, 0.0000e+
000,    12,     0
    4, USER , MB rigid          , 0, 0, , C, NO, 0.05, 2, 3.6000e+008,  0.45, 0.0000e+
000,     6,     0
    5, USER , C16/20rigid       , 0, 0, , C, NO, 0, 2, 2.8607e+009,   0.2, 0.0000e+000
,    25,     0
    6, CONC , C16/20            , 0, 0, , C, NO, 0.05, 1, EN04(RC)   ,            , C1
6/20        , NO, 2.8607e+007
    7, CONC , C25/30            , 0, 0, , C, NO, 0.05, 1, EN04(RC)   ,            , C2
5/30        , NO, 3.1475e+007

*MATL-COLOR
; iMAT, W_R, W_G, W_B, HF_R, HF_G, HF_B, HE_R, HE_G, HE_B, bBLEND, FACT
    1,   0,   0,   0,  255, 128,  64,    0,   0,   0,  NO, 0.5
    2,   0,   0,   0,  255, 128, 128,    0,   0,   0,  NO, 0.5
    3,   0,   0,   0,    0, 128,   0,    0,   0,   0,  NO, 0.5
    4,   0,   0,   0,    0, 206, 103,    0,   0,   0,  NO, 0.5
    5, 128,   0, 128,  255,   0,   0,    0, 255,   0,  NO, 0.5
    6,   0,   0,   0,  192, 192, 192,    0,   0,   0,  NO, 0.5
    7, 128,   0, 128,  255,   0,   0,    0, 255,   0,  NO, 0.5
```

```
*SECTION    ; Section
; iSEC, TYPE, SNAME, [OFFSET], bSD, bWE, SHAPE, [DATA1], [DATA2]                    ;
1st line - DB/USER
; iSEC, TYPE, SNAME, [OFFSET], bSD, bWE, SHAPE, BLT, D1, ..., D8, iCEL              ;
1st line - VALUE
;       AREA, ASy, ASz, Ixx, Iyy, Izz                                               ;
2nd line
;       CyP, CyM, CzP, CzM, QyB, QzB, PERI_OUT, PERI_IN, Cy, Cz                     ;
3rd line
;       Y1, Y2, Y3, Y4, Z1, Z2, Z3, Z4, Zyy, Zzz                                    ;
4th line
; iSEC, TYPE, SNAME, [OFFSET], bSD, bWE, SHAPE, ELAST, DEN, POIS, POIC, SF, THERMAL ;
1st line - SRC
;       D1, D2, [SRC]                                                               ;
2nd line
; iSEC, TYPE, SNAME, [OFFSET], bSD, bWE, SHAPE, 1, DB, NAME1, NAME2, D1, D2         ;
1st line - COMBINED
; iSEC, TYPE, SNAME, [OFFSET], bSD, bWE, SHAPE, 2, D11, D12, D13, D14, D15, D21, D22,
D23, D24
; iSEC, TYPE, SNAME, [OFFSET2], bSD, bWE, SHAPE, iyVAR, izVAR, STYPE                ;
1st line - TAPERED
;       DB, NAME1, NAME2                                                            ;
2nd line(STYPE=DB)
;       [DIM1], [DIM2]                                                              ;
2nd line(STYPE=USER)
;       D11, D12, D13, D14, D15, D16, D17, D18                                      ;
2nd line(STYPE=VALUE)
;       AREA1, ASy1, ASz1, Ixx1, Iyy1, Izz1                                         ;
3rd line(STYPE=VALUE)
;       CyP1, CyM1, CzP1, CzM1, QyB1, QzB1, PERI_OUT1, PERI_IN1, Cy1, Cz1           ;
4th line(STYPE=VALUE)
;       Y11, Y12, Y13, Y14, Z11, Z12, Z13, Z14, Zyy1, Zyy2                          ;
5th line(STYPE=VALUE)
;       D21, D22, D23, D24, D25, D26, D27, D28                                      ;
6th line(STYPE=VALUE)
;       AREA2, ASy2, ASz2, Ixx2, Iyy2, Izz2                                         ;
7th line(STYPE=VALUE)
;       CyP2, CyM2, CzP2, CzM2, QyB2, QzB2, PERI_OUT2, PERI_IN2, Cy2, Cz2           ;
8th line(STYPE=VALUE)
;       Y21, Y22, Y23, Y24, Z21, Z22, Z23, Z24, Zyy2, Zzz2                          ;
9th line(STYPE=VALUE)
; iSEC, TYPE, SNAME, [OFFSET], bSD, bWE, SHAPE                                      ;
1st line - COMPOSITE-B
;       Hw, tw, B1, Bf1, tf1, B2, Bf2, tf2                                          ;
2nd line
;       [SHAPE-NUM], [STIFF-SHAPE], [STIFF-POS] (1~4)                               ;
3rd line
;       SW, GN, CTC, Bc, Tc, Hh, EsEc, DsDc, Ps, Pc, TsTc, bMulti, Elong, Esh       ;
4th line
; iSEC, TYPE, SNAME, [OFFSET], bSD, bWE, SHAPE                                      ;
1st line - COMPOSITE-I
;       Hw, tw, B1, tf1, B2, tf2                                                    ;
2nd line
;       [SHAPE-NUM], [STIFF-SHAPE], [STIFF-POS] (1~2)                               ;
3rd line
;       SW, GN, CTC, Bc, Tc, Hh, EsEc, DsDc, Ps, Pc, TsTc, bMulti, Elong, Esh       ;
4th line
; iSEC, TYPE, SNAME, [OFFSET], bSD, bWE, SHAPE                                      ;
1st line - COMPOSITE-TUB
;       Hw, tw, B1, Bf1, tf1, B2, Bf2, tf2, Bf3, tfp                                ;
2nd line
```

```
;       [SHAPE-NUM], [STIFF-SHAPE], [STIFF-POS] (1~3)                           ;
3rd line
;       SW, GN, CTC, Bc, Tc, Hh, EsEc, DsDc, Ps, Pc, TsTc, bMulti, Elong, Esh       ;
4th line
; [DATA1] : 1, DB, NAME or 2, D1, D2, D3, D4, D5, D6, D7, D8, D9, D10
; [DATA2] : CCSHAPE or iCEL or iN1, iN2
; [SRC]  : 1, DB, NAME1, NAME2 or 2, D1, D2, D3, D4, D5, D6, D7, D8, D9, D10, iN1, iN2
; [DIM1], [DIM2] : D1, D2, D3, D4, D5, D6, D7, D8
; [OFFSET] : OFFSET, iCENT, iREF, iHORZ, HUSER, iVERT, VUSER
; [OFFSET2]: OFFSET, iCENT, iREF, iHORZ, HUSERI, HUSERJ, iVERT, VUSERI, VUSERJ
; [SHAPE-NUM]: SHAPE-NUM, POS, STIFF-NUM1, STIFF-NUM2, STIFF-NUM3, STIFF-NUM4
; [STIFF-SHAPE]: SHAPE-NUM, for(SHAPE-NUM) { NAME, SIZE1~8 }
; [STIFF-POS]: STIFF-NUM, for(STIFF-NUM) { SPACING, iSHAPE, bCALC }
    1, DBUSER    , L0_X1            , CC, 0, 0, 0, 0, 0, 0, YES, NO, SB , 2, 1.93, 0.
36, 0, 0, 0, 0, 0, 0, 0, 0
    2, DBUSER    , L0_X2            , CC, 0, 0, 0, 0, 0, 0, YES, NO, SB , 2, 0.65, 0.
36, 0, 0, 0, 0, 0, 0, 0, 0
    3, DBUSER    , L0_X2bis         , CC, 0, 0, 0, 0, 0, 0, YES, NO, SB , 2, 1.225, 0
.36, 0, 0, 0, 0, 0, 0, 0, 0
    4, DBUSER    , L0_X3            , CC, 0, 0, 0, 0, 0, 0, YES, NO, SB , 2, 1.83, 0.
36, 0, 0, 0, 0, 0, 0, 0, 0
    5, DBUSER    , L0_X4            , CC, 0, 0, 0, 0, 0, 0, YES, NO, SB , 2, 1.25, 0.
36, 0, 0, 0, 0, 0, 0, 0, 0
    6, DBUSER    , L0_X5            , CC, 0, 0, 0, 0, 0, 0, YES, NO, SB , 2, 0.47, 0.
36, 0, 0, 0, 0, 0, 0, 0, 0
    7, DBUSER    , L0_X6            , CC, 0, 0, 0, 0, 0, 0, YES, NO, SB , 2, 4.68, 0.
25, 0, 0, 0, 0, 0, 0, 0, 0
    8, DBUSER    , L0_X7            , CC, 0, 0, 0, 0, 0, 0, YES, NO, SB , 2, 1.53, 0.
25, 0, 0, 0, 0, 0, 0, 0, 0
    9, DBUSER    , L0_X8            , CC, 0, 0, 0, 0, 0, 0, YES, NO, SB , 2, 1.75, 0.
25, 0, 0, 0, 0, 0, 0, 0, 0
   10, DBUSER    , L0_X9            , CC, 0, 0, 0, 0, 0, 0, YES, NO, SB , 2, 1.33, 0.
25, 0, 0, 0, 0, 0, 0, 0, 0
   11, DBUSER    , L0_X10           , CC, 0, 0, 0, 0, 0, 0, YES, NO, SB , 2, 0.78, 0.
36, 0, 0, 0, 0, 0, 0, 0, 0
   12, DBUSER    , L0_X11           , CC, 0, 0, 0, 0, 0, 0, YES, NO, SB , 2, 2.95, 0.
36, 0, 0, 0, 0, 0, 0, 0, 0
   13, DBUSER    , L0_X12           , CC, 0, 0, 0, 0, 0, 0, YES, NO, SB , 2, 1.63, 0.
36, 0, 0, 0, 0, 0, 0, 0, 0
   14, DBUSER    , L0_X13           , CC, 0, 0, 0, 0, 0, 0, YES, NO, SB , 2, 0.75, 0.
25, 0, 0, 0, 0, 0, 0, 0, 0
   15, DBUSER    , L0_X14           , CC, 0, 0, 0, 0, 0, 0, YES, NO, SB , 2, 4.47, 0.
25, 0, 0, 0, 0, 0, 0, 0, 0
   16, DBUSER    , L0_X15           , CC, 0, 0, 0, 0, 0, 0, YES, NO, SB , 2, 4.83, 0.
25, 0, 0, 0, 0, 0, 0, 0, 0
   17, DBUSER    , L0_X16           , CC, 0, 0, 0, 0, 0, 0, YES, NO, SB , 2, 0.3, 0.3
6, 0, 0, 0, 0, 0, 0, 0, 0
   18, DBUSER    , L0_X17           , CC, 0, 0, 0, 0, 0, 0, YES, NO, SB , 2, 0.5, 0.3
6, 0, 0, 0, 0, 0, 0, 0, 0
   19, DBUSER    , L0_X18           , CC, 0, 0, 0, 0, 0, 0, YES, NO, SB , 2, 0.65, 0.
36, 0, 0, 0, 0, 0, 0, 0, 0
   22, DBUSER    , Setto            , CC, 0, 0, 0, 0, 0, 0, YES, NO, SB , 2, 0.84, 0.
25, 0, 0, 0, 0, 0, 0, 0, 0
   23, DBUSER    , L0_X22           , CC, 0, 0, 0, 0, 0, 0, YES, NO, SB , 2, 1.6, 0.2
5, 0, 0, 0, 0, 0, 0, 0, 0
   24, DBUSER    , L0_X23           , CC, 0, 0, 0, 0, 0, 0, YES, NO, SB , 2, 3.77, 0.
25, 0, 0, 0, 0, 0, 0, 0, 0
   25, DBUSER    , L0_X24           , CC, 0, 0, 0, 0, 0, 0, YES, NO, SB , 2, 0.95, 0.
25, 0, 0, 0, 0, 0, 0, 0, 0
   26, DBUSER    , L0_X25           , CC, 0, 0, 0, 0, 0, 0, YES, NO, SB , 2, 6.45, 0.
25, 0, 0, 0, 0, 0, 0, 0, 0
   27, DBUSER    , L0_X26           , CC, 0, 0, 0, 0, 0, 0, YES, NO, SB , 2, 4.83, 0.
```

```
25, 0, 0, 0, 0, 0, 0, 0, 0
   28, DBUSER    , L0_X27            , CC, 0, 0, 0, 0, 0, 0, YES, NO, SB , 2, 0.97, 0.
36, 0, 0, 0, 0, 0, 0, 0, 0
   29, DBUSER    , L0_X28            , CC, 0, 0, 0, 0, 0, 0, YES, NO, SB , 2, 1.19, 0.
36, 0, 0, 0, 0, 0, 0, 0, 0
   30, DBUSER    , L0_X29            , CC, 0, 0, 0, 0, 0, 0, YES, NO, SB , 2, 1, 0.36,
 0, 0, 0, 0, 0, 0, 0, 0
   31, DBUSER    , L0_X30            , CC, 0, 0, 0, 0, 0, 0, YES, NO, SB , 2, 0.29, 0.
36, 0, 0, 0, 0, 0, 0, 0, 0
   32, DBUSER    , L0_X31            , CC, 0, 0, 0, 0, 0, 0, YES, NO, SB , 2, 0.19, 0.
36, 0, 0, 0, 0, 0, 0, 0, 0
   33, DBUSER    , L0_X32            , CC, 0, 0, 0, 0, 0, 0, YES, NO, SB , 2, 0.29, 0.
36, 0, 0, 0, 0, 0, 0, 0, 0
   34, DBUSER    , L0_X33            , CC, 0, 0, 0, 0, 0, 0, YES, NO, SB , 2, 1.29, 0.
36, 0, 0, 0, 0, 0, 0, 0, 0
   35, DBUSER    , L0_X33bis         , CC, 0, 0, 0, 0, 0, 0, YES, NO, SB , 2, 0.95, 0.
36, 0, 0, 0, 0, 0, 0, 0, 0
   36, DBUSER    , L0_X34            , CC, 0, 0, 0, 0, 0, 0, YES, NO, SB , 2, 1.55, 0.
36, 0, 0, 0, 0, 0, 0, 0, 0
   37, DBUSER    , L0_X35            , CC, 0, 0, 0, 0, 0, 0, YES, NO, SB , 2, 6.35, 0.
36, 0, 0, 0, 0, 0, 0, 0, 0
   38, DBUSER    , L0_X22bis         , CC, 0, 0, 0, 0, 0, 0, YES, NO, SB , 2, 1.28, 0.
25, 0, 0, 0, 0, 0, 0, 0, 0
  100, DBUSER    , L0_Y01            , CC, 0, 0, 0, 0, 0, 0, YES, NO, SB , 2, 7.4, 0.3
6, 0, 0, 0, 0, 0, 0, 0, 0
  101, DBUSER    , L0_Y02            , CC, 0, 0, 0, 0, 0, 0, YES, NO, SB , 2, 1.62, 0.
25, 0, 0, 0, 0, 0, 0, 0, 0
  102, DBUSER    , L0_Y02bis         , CC, 0, 0, 0, 0, 0, 0, YES, NO, SB , 2, 2.18, 0.
25, 0, 0, 0, 0, 0, 0, 0, 0
  103, DBUSER    , L0_Y02tris        , CC, 0, 0, 0, 0, 0, 0, YES, NO, SB , 2, 3.55, 0.
25, 0, 0, 0, 0, 0, 0, 0, 0
  104, DBUSER    , L0_Y03            , CC, 0, 0, 0, 0, 0, 0, YES, NO, SB , 2, 1.54, 0.
36, 0, 0, 0, 0, 0, 0, 0, 0
  105, DBUSER    , L0_Y04            , CC, 0, 0, 0, 0, 0, 0, YES, NO, SB , 2, 1.2, 0.3
6, 0, 0, 0, 0, 0, 0, 0, 0
  106, DBUSER    , L0_Y04bis         , CC, 0, 0, 0, 0, 0, 0, YES, NO, SB , 2, 0.59, 0.
36, 0, 0, 0, 0, 0, 0, 0, 0
  107, DBUSER    , L0_Y05            , CC, 0, 0, 0, 0, 0, 0, YES, NO, SB , 2, 1.25, 0.
25, 0, 0, 0, 0, 0, 0, 0, 0
  108, DBUSER    , L0_Y06            , CC, 0, 0, 0, 0, 0, 0, YES, NO, SB , 2, 1.15, 0.
36, 0, 0, 0, 0, 0, 0, 0, 0
  109, DBUSER    , L0_Y07            , CC, 0, 0, 0, 0, 0, 0, YES, NO, SB , 2, 1.18, 0.
25, 0, 0, 0, 0, 0, 0, 0, 0
  110, DBUSER    , L0_Y08            , CC, 0, 0, 0, 0, 0, 0, YES, NO, SB , 2, 2.75, 0.
36, 0, 0, 0, 0, 0, 0, 0, 0
  111, DBUSER    , L0_Y09            , CC, 0, 0, 0, 0, 0, 0, YES, NO, SB , 2, 6.43, 0.
25, 0, 0, 0, 0, 0, 0, 0, 0
  112, DBUSER    , L0_Y10            , CC, 0, 0, 0, 0, 0, 0, YES, NO, SB , 2, 6.43, 0.
25, 0, 0, 0, 0, 0, 0, 0, 0
  113, DBUSER    , L0_Y11            , CC, 0, 0, 0, 0, 0, 0, YES, NO, SB , 2, 6.43, 0.
36, 0, 0, 0, 0, 0, 0, 0, 0
  114, DBUSER    , L0_Y12            , CC, 0, 0, 0, 0, 0, 0, YES, NO, SB , 2, 0.84, 0.
36, 0, 0, 0, 0, 0, 0, 0, 0
  115, DBUSER    , L0_Y13            , CC, 0, 0, 0, 0, 0, 0, YES, NO, SB , 2, 0.83, 0.
25, 0, 0, 0, 0, 0, 0, 0, 0
  116, DBUSER    , L0_Y14            , CC, 0, 0, 0, 0, 0, 0, YES, NO, SB , 2, 2.55, 0.
36, 0, 0, 0, 0, 0, 0, 0, 0
  117, DBUSER    , L0_Y14bis         , CC, 0, 0, 0, 0, 0, 0, YES, NO, SB , 2, 4.11, 0.
25, 0, 0, 0, 0, 0, 0, 0, 0
  118, DBUSER    , L0_Y15            , CC, 0, 0, 0, 0, 0, 0, YES, NO, SB , 2, 1.37, 0.
36, 0, 0, 0, 0, 0, 0, 0, 0
  119, DBUSER    , L0_Y16            , CC, 0, 0, 0, 0, 0, 0, YES, NO, SB , 2, 5.61, 0.
```

```
36, 0, 0, 0, 0, 0, 0, 0, 0
  120, DBUSER    , L0_Y17            , CC, 0, 0, 0, 0, 0, 0, YES, NO, SB , 2, 4.69, 0.
25, 0, 0, 0, 0, 0, 0, 0, 0
  121, DBUSER    , L0_Y17bis         , CC, 0, 0, 0, 0, 0, 0, YES, NO, SB , 2, 1.35, 0.
25, 0, 0, 0, 0, 0, 0, 0, 0
  122, DBUSER    , L0_Y18            , CC, 0, 0, 0, 0, 0, 0, YES, NO, SB , 2, 1.79, 0.
36, 0, 0, 0, 0, 0, 0, 0, 0
  700, DBUSER    , Pilastro fitt     , CC, 0, 0, 0, 0, 0, 0, YES, NO, SB , 2, 0.248, 0
.248, 0, 0, 0, 0, 0, 0, 0, 0
  701, DBUSER    , cordolo 40x21     , CC, 0, 0, 0, 0, 0, 0, YES, NO, SB , 2, 0.21, 0.
4, 0, 0, 0, 0, 0, 0, 0, 0
  702, DBUSER    , cordolo 30x21     , CC, 0, 0, 0, 0, 0, 0, YES, NO, SB , 2, 0.21, 0.
3, 0, 0, 0, 0, 0, 0, 0, 0
  703, DBUSER    , cordolo RIGID     , CC, 0, 0, 0, 0, 0, 0, YES, NO, SB , 2, 0.2, 0.4
, 0, 0, 0, 0, 0, 0, 0, 0
  704, DBUSER    , cordolo fitt      , CC, 0, 0, 0, 0, 0, 0, YES, NO, SB , 2, 0.2, 0.2
5, 0, 0, 0, 0, 0, 0, 0, 0
  707, DBUSER    , Pilastro 50x25    , CC, 0, 0, 0, 0, 0, 0, YES, NO, SB , 2, 0.5, 0.2
5, 0, 0, 0, 0, 0, 0, 0, 0
  708, DBUSER    , Trave             , CC, 0, 0, 0, 0, 0, 0, YES, NO, SB , 2, 0.25, 0.
55, 0, 0, 0, 0, 0, 0, 0, 0
  709, DBUSER    , Fascia 0.60x0.36  , CC, 0, 0, 0, 0, 0, 0, YES, NO, SB , 2, 0.6, 0.3
6, 0, 0, 0, 0, 0, 0, 0, 0
  710, DBUSER    , Fascia 1.45x0.25  , CC, 0, 0, 0, 0, 0, 0, YES, NO, SB , 2, 1.45, 0.
25, 0, 0, 0, 0, 0, 0, 0, 0
  711, DBUSER    , Fascia 0.95x0.25  , CC, 0, 0, 0, 0, 0, 0, YES, NO, SB , 2, 0.95, 0.
25, 0, 0, 0, 0, 0, 0, 0, 0
  712, DBUSER    , Fascia 0.45x0.36  , CC, 0, 0, 0, 0, 0, 0, YES, NO, SB , 2, 0.45, 0.
36, 0, 0, 0, 0, 0, 0, 0, 0
 1000, DBUSER    , LINE              , CC, 0, 0, 0, 0, 0, 0, YES, NO, SB , 2, 0.01, 0.
01, 0, 0, 0, 0, 0, 0, 0, 0

*SECT-COLOR
; iSEC, W_R, W_G, W_B, HF_R, HF_G, HF_B, HE_R, HE_G, HE_B, bBLEND, FACT
    1, 128,   0, 128,  255,   0,   0,    0, 255,   0,  NO, 0.5
    2, 128,   0, 128,  255,   0,   0,    0, 255,   0,  NO, 0.5
    3, 128,   0, 128,  255,   0,   0,    0, 255,   0,  NO, 0.5
    4, 128,   0, 128,  255,   0,   0,    0, 255,   0,  NO, 0.5
    5, 128,   0, 128,  255,   0,   0,    0, 255,   0,  NO, 0.5
    6, 128,   0, 128,  255,   0,   0,    0, 255,   0,  NO, 0.5
    7, 128,   0, 128,  255,   0,   0,    0, 255,   0,  NO, 0.5
    8, 128,   0, 128,  255,   0,   0,    0, 255,   0,  NO, 0.5
    9, 128,   0, 128,  255,   0,   0,    0, 255,   0,  NO, 0.5
   10, 128,   0, 128,  255,   0,   0,    0, 255,   0,  NO, 0.5
   11, 128,   0, 128,  255,   0,   0,    0, 255,   0,  NO, 0.5
   12, 128,   0, 128,  255,   0,   0,    0, 255,   0,  NO, 0.5
   13, 128,   0, 128,  255,   0,   0,    0, 255,   0,  NO, 0.5
   14, 128,   0, 128,  255,   0,   0,    0, 255,   0,  NO, 0.5
   15, 128,   0, 128,  255,   0,   0,    0, 255,   0,  NO, 0.5
   16, 128,   0, 128,  255,   0,   0,    0, 255,   0,  NO, 0.5
   17, 128,   0, 128,  255,   0,   0,    0, 255,   0,  NO, 0.5
   18, 128,   0, 128,  255,   0,   0,    0, 255,   0,  NO, 0.5
   19, 128,   0, 128,  255,   0,   0,    0, 255,   0,  NO, 0.5
   22, 128,   0, 128,  255,   0,   0,    0, 255,   0,  NO, 0.5
   23, 128,   0, 128,  255,   0,   0,    0, 255,   0,  NO, 0.5
   24, 128,   0, 128,  255,   0,   0,    0, 255,   0,  NO, 0.5
   25, 128,   0, 128,  255,   0,   0,    0, 255,   0,  NO, 0.5
   26, 128,   0, 128,  255,   0,   0,    0, 255,   0,  NO, 0.5
   27, 128,   0, 128,  255,   0,   0,    0, 255,   0,  NO, 0.5
   28, 128,   0, 128,  255,   0,   0,    0, 255,   0,  NO, 0.5
   29, 128,   0, 128,  255,   0,   0,    0, 255,   0,  NO, 0.5
   30, 128,   0, 128,  255,   0,   0,    0, 255,   0,  NO, 0.5
```

```
   31, 128,   0, 128,  255,   0,   0,    0, 255,   0,  NO, 0.5
   32, 128,   0, 128,  255,   0,   0,    0, 255,   0,  NO, 0.5
   33, 128,   0, 128,  255,   0,   0,    0, 255,   0,  NO, 0.5
   34, 128,   0, 128,  255,   0,   0,    0, 255,   0,  NO, 0.5
   35, 128,   0, 128,  255,   0,   0,    0, 255,   0,  NO, 0.5
   36, 128,   0, 128,  255,   0,   0,    0, 255,   0,  NO, 0.5
   37, 128,   0, 128,  255,   0,   0,    0, 255,   0,  NO, 0.5
   38, 128,   0, 128,  255,   0,   0,    0, 255,   0,  NO, 0.5
  100, 128,   0, 128,  255,   0,   0,    0, 255,   0,  NO, 0.5
  101, 128,   0, 128,  255,   0,   0,    0, 255,   0,  NO, 0.5
  102, 128,   0, 128,  255,   0,   0,    0, 255,   0,  NO, 0.5
  103, 128,   0, 128,  255,   0,   0,    0, 255,   0,  NO, 0.5
  104, 128,   0, 128,  255,   0,   0,    0, 255,   0,  NO, 0.5
  105, 128,   0, 128,  255,   0,   0,    0, 255,   0,  NO, 0.5
  106, 128,   0, 128,  255,   0,   0,    0, 255,   0,  NO, 0.5
  107, 128,   0, 128,  255,   0,   0,    0, 255,   0,  NO, 0.5
  108, 128,   0, 128,  255,   0,   0,    0, 255,   0,  NO, 0.5
  109, 128,   0, 128,  255,   0,   0,    0, 255,   0,  NO, 0.5
  110, 128,   0, 128,  255,   0,   0,    0, 255,   0,  NO, 0.5
  111, 128,   0, 128,  255,   0,   0,    0, 255,   0,  NO, 0.5
  112, 128,   0, 128,  255,   0,   0,    0, 255,   0,  NO, 0.5
  113, 128,   0, 128,  255,   0,   0,    0, 255,   0,  NO, 0.5
  114, 128,   0, 128,  255,   0,   0,    0, 255,   0,  NO, 0.5
  115, 128,   0, 128,  255,   0,   0,    0, 255,   0,  NO, 0.5
  116, 128,   0, 128,  255,   0,   0,    0, 255,   0,  NO, 0.5
  117, 128,   0, 128,  255,   0,   0,    0, 255,   0,  NO, 0.5
  118, 128,   0, 128,  255,   0,   0,    0, 255,   0,  NO, 0.5
  119, 128,   0, 128,  255,   0,   0,    0, 255,   0,  NO, 0.5
  120, 128,   0, 128,  255,   0,   0,    0, 255,   0,  NO, 0.5
  121, 128,   0, 128,  255,   0,   0,    0, 255,   0,  NO, 0.5
  122, 128,   0, 128,  255,   0,   0,    0, 255,   0,  NO, 0.5
  700, 128,   0, 128,  255,   0,   0,    0, 255,   0,  NO, 0.5
  701, 128,   0, 128,  255,   0,   0,    0, 255,   0,  NO, 0.5
  702, 128,   0, 128,  255,   0,   0,    0, 255,   0,  NO, 0.5
  703, 128,   0, 128,  255,   0,   0,    0, 255,   0,  NO, 0.5
  704, 128,   0, 128,  255,   0,   0,    0, 255,   0,  NO, 0.5
  707, 128,   0, 128,  255,   0,   0,    0, 255,   0,  NO, 0.5
  708, 128,   0, 128,  255,   0,   0,    0, 255,   0,  NO, 0.5
  709, 128,   0, 128,  255,   0,   0,    0, 255,   0,  NO, 0.5
  710, 128,   0, 128,  255,   0,   0,    0, 255,   0,  NO, 0.5
  711, 128,   0, 128,  255,   0,   0,    0, 255,   0,  NO, 0.5
  712, 128,   0, 128,  255,   0,   0,    0, 255,   0,  NO, 0.5
 1000, 128,   0, 128,  255,   0,   0,    0, 255,   0,  NO, 0.5

*SECT-SCALE    ; Section Stiffness Scale Factor
; iSEC, AREA_SF, ASY_SF, ASZ_SF, IXX_SF, IYY_SF, IZZ_SF, WGT_SF, GROUP, iPart ; line 1
  703, 1, 100, 100, 1, 100, 100, 1, , 1
  704, 1, 1, 1, 1, 1, 1, 0.001, , 1
 1000, 1, 100, 100, 1, 100, 100, 0.01, , 1

*DGN-SECT
; iSEC, TYPE, SNAME, [OFFSET], bSD, bWE, SHAPE, [DATA1], [DATA2]                    ;
1st line - DB/USER
; iSEC, TYPE, SNAME, [OFFSET], bSD, bWE, SHAPE, BLT, D1, ..., D8, iCEL              ;
1st line - VALUE
;       AREA, ASy, ASz, Ixx, Iyy, Izz                                               ;
2nd line
;       CyP, CyM, CzP, CzM, QyB, QzB, PERI_OUT, PERI_IN, Cy, Cz                     ;
3rd line
;       Y1, Y2, Y3, Y4, Z1, Z2, Z3, Z4, Zyy, Zzz                                    ;
4th line
; iSEC, TYPE, SNAME, [OFFSET], bSD, bWE, SHAPE, ELAST, DEN, POIS, POIC, SF, THERMAL ;
```

```
1st line - SRC
;       D1, D2, [SRC]                                                           ;
2nd line
; iSEC, TYPE, SNAME, [OFFSET], bSD, bWE, SHAPE, 1, DB, NAME1, NAME2, D1, D2     ;
1st line - COMBINED
; iSEC, TYPE, SNAME, [OFFSET], bSD, bWE, SHAPE, 2, D11, D12, D13, D14, D15, D21, D22,
D23, D24
; iSEC, TYPE, SNAME, [OFFSET2], bSD, bWE, SHAPE, iyVAR, izVAR, STYPE            ;
1st line - TAPERED
;       DB, NAME1, NAME2                                                        ;
2nd line(STYPE=DB)
;       [DIM1], [DIM2]                                                          ;
2nd line(STYPE=USER)
;       D11, D12, D13, D14, D15, D16, D17, D18                                  ;
2nd line(STYPE=VALUE)
;       AREA1, ASy1, ASz1, Ixx1, Iyy1, Izz1                                     ;
3rd line(STYPE=VALUE)
;       CyP1, CyM1, CzP1, CzM1, QyB1, QzB1, PERI_OUT1, PERI_IN1, Cy1, Cz1       ;
4th line(STYPE=VALUE)
;       Y11, Y12, Y13, Y14, Z11, Z12, Z13, Z14, Zyy1, Zyy2                      ;
5th line(STYPE=VALUE)
;       D21, D22, D23, D24, D25, D26, D27, D28                                  ;
6th line(STYPE=VALUE)
;       AREA2, ASy2, ASz2, Ixx2, Iyy2, Izz2                                     ;
7th line(STYPE=VALUE)
;       CyP2, CyM2, CzP2, CzM2, QyB2, QzB2, PERI_OUT2, PERI_IN2, Cy2, Cz2       ;
8th line(STYPE=VALUE)
;       Y21, Y22, Y23, Y24, Z21, Z22, Z23, Z24, Zyy2, Zzz2                      ;
9th line(STYPE=VALUE)
; iSEC, TYPE, SNAME, [OFFSET], bSD, bWE, SHAPE                                  ;
1st line - COMPOSITE-B
;       Hw, tw, B1, Bf1, tf1, B2, Bf2, tf2                                      ;
2nd line
;       [SHAPE-NUM], [STIFF-SHAPE], [STIFF-POS] (1~4)                           ;
3rd line
;       SW, GN, CTC, Bc, Tc, Hh, EsEc, DsDc, Ps, Pc, TsTc, bMulti, Elong, Esh   ;
4th line
; iSEC, TYPE, SNAME, [OFFSET], bSD, bWE, SHAPE                                  ;
1st line - COMPOSITE-I
;       Hw, tw, B1, tf1, B2, tf2                                                ;
2nd line
;       [SHAPE-NUM], [STIFF-SHAPE], [STIFF-POS] (1~2)                           ;
3rd line
;       SW, GN, CTC, Bc, Tc, Hh, EsEc, DsDc, Ps, Pc, TsTc, bMulti, Elong, Esh   ;
4th line
; iSEC, TYPE, SNAME, [OFFSET], bSD, bWE, SHAPE                                  ;
1st line - COMPOSITE-TUB
;       Hw, tw, B1, Bf1, tf1, B2, Bf2, tf2, Bf3, tfp                            ;
2nd line
;       [SHAPE-NUM], [STIFF-SHAPE], [STIFF-POS] (1~3)                           ;
3rd line
;       SW, GN, CTC, Bc, Tc, Hh, EsEc, DsDc, Ps, Pc, TsTc, bMulti, Elong, Esh   ;
4th line
; [DATA1] : 1, DB, NAME or 2, D1, D2, D3, D4, D5, D6, D7, D8, D9, D10
; [DATA2] : CCSHAPE or iCEL or iN1, iN2
; [SRC]  : 1, DB, NAME1, NAME2 or 2, D1, D2, D3, D4, D5, D6, D7, D8, D9, D10, iN1, iN2
; [DIM1], [DIM2] : D1, D2, D3, D4, D5, D6, D7, D8
; [OFFSET] : OFFSET, iCENT, iREF, iHORZ, HUSER, iVERT, VUSER
; [OFFSET2]: OFFSET, iCENT, iREF, iHORZ, HUSERI, HUSERJ, iVERT, VUSERI, VUSERJ
; [SHAPE-NUM]: SHAPE-NUM, POS, STIFF-NUM1, STIFF-NUM2, STIFF-NUM3, STIFF-NUM4
; [STIFF-SHAPE]: SHAPE-NUM, for(SHAPE-NUM) { NAME, SIZE1~8 }
; [STIFF-POS]: STIFF-NUM, for(STIFF-NUM) { SPACING, iSHAPE, bCALC }
```

```
    1, DBUSER    , L0_X1            , CC, 0, 0, 0, 0, 0, 0, YES, NO, SB , 2, 1.93, 0.
36, 0, 0, 0, 0, 0, 0, 0, 0
    2, DBUSER    , L0_X2            , CC, 0, 0, 0, 0, 0, 0, YES, NO, SB , 2, 0.65, 0.
36, 0, 0, 0, 0, 0, 0, 0, 0
    3, DBUSER    , L0_X2bis         , CC, 0, 0, 0, 0, 0, 0, YES, NO, SB , 2, 1.225, 0
.36, 0, 0, 0, 0, 0, 0, 0, 0
    4, DBUSER    , L0_X3            , CC, 0, 0, 0, 0, 0, 0, YES, NO, SB , 2, 1.83, 0.
36, 0, 0, 0, 0, 0, 0, 0, 0
    5, DBUSER    , L0_X4            , CC, 0, 0, 0, 0, 0, 0, YES, NO, SB , 2, 1.25, 0.
36, 0, 0, 0, 0, 0, 0, 0, 0
    6, DBUSER    , L0_X5            , CC, 0, 0, 0, 0, 0, 0, YES, NO, SB , 2, 0.47, 0.
36, 0, 0, 0, 0, 0, 0, 0, 0
    7, DBUSER    , L0_X6            , CC, 0, 0, 0, 0, 0, 0, YES, NO, SB , 2, 4.68, 0.
25, 0, 0, 0, 0, 0, 0, 0, 0
    8, DBUSER    , L0_X7            , CC, 0, 0, 0, 0, 0, 0, YES, NO, SB , 2, 1.53, 0.
25, 0, 0, 0, 0, 0, 0, 0, 0
    9, DBUSER    , L0_X8            , CC, 0, 0, 0, 0, 0, 0, YES, NO, SB , 2, 1.75, 0.
25, 0, 0, 0, 0, 0, 0, 0, 0
   10, DBUSER    , L0_X9            , CC, 0, 0, 0, 0, 0, 0, YES, NO, SB , 2, 1.33, 0.
25, 0, 0, 0, 0, 0, 0, 0, 0
   11, DBUSER    , L0_X10           , CC, 0, 0, 0, 0, 0, 0, YES, NO, SB , 2, 0.78, 0.
36, 0, 0, 0, 0, 0, 0, 0, 0
   12, DBUSER    , L0_X11           , CC, 0, 0, 0, 0, 0, 0, YES, NO, SB , 2, 2.95, 0.
36, 0, 0, 0, 0, 0, 0, 0, 0
   13, DBUSER    , L0_X12           , CC, 0, 0, 0, 0, 0, 0, YES, NO, SB , 2, 1.63, 0.
36, 0, 0, 0, 0, 0, 0, 0, 0
   14, DBUSER    , L0_X13           , CC, 0, 0, 0, 0, 0, 0, YES, NO, SB , 2, 0.75, 0.
25, 0, 0, 0, 0, 0, 0, 0, 0
   15, DBUSER    , L0_X14           , CC, 0, 0, 0, 0, 0, 0, YES, NO, SB , 2, 4.47, 0.
25, 0, 0, 0, 0, 0, 0, 0, 0
   16, DBUSER    , L0_X15           , CC, 0, 0, 0, 0, 0, 0, YES, NO, SB , 2, 4.83, 0.
25, 0, 0, 0, 0, 0, 0, 0, 0
   17, DBUSER    , L0_X16           , CC, 0, 0, 0, 0, 0, 0, YES, NO, SB , 2, 0.3, 0.3
6, 0, 0, 0, 0, 0, 0, 0, 0
   18, DBUSER    , L0_X17           , CC, 0, 0, 0, 0, 0, 0, YES, NO, SB , 2, 0.5, 0.3
6, 0, 0, 0, 0, 0, 0, 0, 0
   19, DBUSER    , L0_X18           , CC, 0, 0, 0, 0, 0, 0, YES, NO, SB , 2, 0.65, 0.
36, 0, 0, 0, 0, 0, 0, 0, 0
   22, DBUSER    , Setto            , CC, 0, 0, 0, 0, 0, 0, YES, NO, SB , 2, 0.84, 0.
25, 0, 0, 0, 0, 0, 0, 0, 0
   23, DBUSER    , L0_X22           , CC, 0, 0, 0, 0, 0, 0, YES, NO, SB , 2, 1.6, 0.2
5, 0, 0, 0, 0, 0, 0, 0, 0
   24, DBUSER    , L0_X23           , CC, 0, 0, 0, 0, 0, 0, YES, NO, SB , 2, 3.77, 0.
25, 0, 0, 0, 0, 0, 0, 0, 0
   25, DBUSER    , L0_X24           , CC, 0, 0, 0, 0, 0, 0, YES, NO, SB , 2, 0.95, 0.
25, 0, 0, 0, 0, 0, 0, 0, 0
   26, DBUSER    , L0_X25           , CC, 0, 0, 0, 0, 0, 0, YES, NO, SB , 2, 6.45, 0.
25, 0, 0, 0, 0, 0, 0, 0, 0
   27, DBUSER    , L0_X26           , CC, 0, 0, 0, 0, 0, 0, YES, NO, SB , 2, 4.83, 0.
25, 0, 0, 0, 0, 0, 0, 0, 0
   28, DBUSER    , L0_X27           , CC, 0, 0, 0, 0, 0, 0, YES, NO, SB , 2, 0.97, 0.
36, 0, 0, 0, 0, 0, 0, 0, 0
   29, DBUSER    , L0_X28           , CC, 0, 0, 0, 0, 0, 0, YES, NO, SB , 2, 1.19, 0.
36, 0, 0, 0, 0, 0, 0, 0, 0
   30, DBUSER    , L0_X29           , CC, 0, 0, 0, 0, 0, 0, YES, NO, SB , 2, 1, 0.36,
 0, 0, 0, 0, 0, 0, 0, 0
   31, DBUSER    , L0_X30           , CC, 0, 0, 0, 0, 0, 0, YES, NO, SB , 2, 0.29, 0.
36, 0, 0, 0, 0, 0, 0, 0, 0
   32, DBUSER    , L0_X31           , CC, 0, 0, 0, 0, 0, 0, YES, NO, SB , 2, 0.19, 0.
36, 0, 0, 0, 0, 0, 0, 0, 0
   33, DBUSER    , L0_X32           , CC, 0, 0, 0, 0, 0, 0, YES, NO, SB , 2, 0.29, 0.
36, 0, 0, 0, 0, 0, 0, 0, 0
```

```
   34, DBUSER    , L0_X33            , CC, 0, 0, 0, 0, 0, 0, YES, NO, SB , 2, 1.29, 0.
36, 0, 0, 0, 0, 0, 0, 0, 0
   35, DBUSER    , L0_X33bis         , CC, 0, 0, 0, 0, 0, 0, YES, NO, SB , 2, 0.95, 0.
36, 0, 0, 0, 0, 0, 0, 0, 0
   36, DBUSER    , L0_X34            , CC, 0, 0, 0, 0, 0, 0, YES, NO, SB , 2, 1.55, 0.
36, 0, 0, 0, 0, 0, 0, 0, 0
   37, DBUSER    , L0_X35            , CC, 0, 0, 0, 0, 0, 0, YES, NO, SB , 2, 6.35, 0.
36, 0, 0, 0, 0, 0, 0, 0, 0
   38, DBUSER    , L0_X22bis         , CC, 0, 0, 0, 0, 0, 0, YES, NO, SB , 2, 1.28, 0.
25, 0, 0, 0, 0, 0, 0, 0, 0
  100, DBUSER    , L0_Y01            , CC, 0, 0, 0, 0, 0, 0, YES, NO, SB , 2, 7.4, 0.3
6, 0, 0, 0, 0, 0, 0, 0, 0
  101, DBUSER    , L0_Y02            , CC, 0, 0, 0, 0, 0, 0, YES, NO, SB , 2, 1.62, 0.
25, 0, 0, 0, 0, 0, 0, 0, 0
  102, DBUSER    , L0_Y02bis         , CC, 0, 0, 0, 0, 0, 0, YES, NO, SB , 2, 2.18, 0.
25, 0, 0, 0, 0, 0, 0, 0, 0
  103, DBUSER    , L0_Y02tris        , CC, 0, 0, 0, 0, 0, 0, YES, NO, SB , 2, 3.55, 0.
25, 0, 0, 0, 0, 0, 0, 0, 0
  104, DBUSER    , L0_Y03            , CC, 0, 0, 0, 0, 0, 0, YES, NO, SB , 2, 1.54, 0.
36, 0, 0, 0, 0, 0, 0, 0, 0
  105, DBUSER    , L0_Y04            , CC, 0, 0, 0, 0, 0, 0, YES, NO, SB , 2, 1.2, 0.3
6, 0, 0, 0, 0, 0, 0, 0, 0
  106, DBUSER    , L0_Y04bis         , CC, 0, 0, 0, 0, 0, 0, YES, NO, SB , 2, 0.59, 0.
36, 0, 0, 0, 0, 0, 0, 0, 0
  107, DBUSER    , L0_Y05            , CC, 0, 0, 0, 0, 0, 0, YES, NO, SB , 2, 1.25, 0.
25, 0, 0, 0, 0, 0, 0, 0, 0
  108, DBUSER    , L0_Y06            , CC, 0, 0, 0, 0, 0, 0, YES, NO, SB , 2, 1.15, 0.
36, 0, 0, 0, 0, 0, 0, 0, 0
  109, DBUSER    , L0_Y07            , CC, 0, 0, 0, 0, 0, 0, YES, NO, SB , 2, 1.18, 0.
25, 0, 0, 0, 0, 0, 0, 0, 0
  110, DBUSER    , L0_Y08            , CC, 0, 0, 0, 0, 0, 0, YES, NO, SB , 2, 2.75, 0.
36, 0, 0, 0, 0, 0, 0, 0, 0
  111, DBUSER    , L0_Y09            , CC, 0, 0, 0, 0, 0, 0, YES, NO, SB , 2, 6.43, 0.
25, 0, 0, 0, 0, 0, 0, 0, 0
  112, DBUSER    , L0_Y10            , CC, 0, 0, 0, 0, 0, 0, YES, NO, SB , 2, 6.43, 0.
25, 0, 0, 0, 0, 0, 0, 0, 0
  113, DBUSER    , L0_Y11            , CC, 0, 0, 0, 0, 0, 0, YES, NO, SB , 2, 6.43, 0.
36, 0, 0, 0, 0, 0, 0, 0, 0
  114, DBUSER    , L0_Y12            , CC, 0, 0, 0, 0, 0, 0, YES, NO, SB , 2, 0.84, 0.
36, 0, 0, 0, 0, 0, 0, 0, 0
  115, DBUSER    , L0_Y13            , CC, 0, 0, 0, 0, 0, 0, YES, NO, SB , 2, 0.83, 0.
25, 0, 0, 0, 0, 0, 0, 0, 0
  116, DBUSER    , L0_Y14            , CC, 0, 0, 0, 0, 0, 0, YES, NO, SB , 2, 2.55, 0.
36, 0, 0, 0, 0, 0, 0, 0, 0
  117, DBUSER    , L0_Y14bis         , CC, 0, 0, 0, 0, 0, 0, YES, NO, SB , 2, 4.11, 0.
25, 0, 0, 0, 0, 0, 0, 0, 0
  118, DBUSER    , L0_Y15            , CC, 0, 0, 0, 0, 0, 0, YES, NO, SB , 2, 1.37, 0.
36, 0, 0, 0, 0, 0, 0, 0, 0
  119, DBUSER    , L0_Y16            , CC, 0, 0, 0, 0, 0, 0, YES, NO, SB , 2, 5.61, 0.
36, 0, 0, 0, 0, 0, 0, 0, 0
  120, DBUSER    , L0_Y17            , CC, 0, 0, 0, 0, 0, 0, YES, NO, SB , 2, 4.69, 0.
25, 0, 0, 0, 0, 0, 0, 0, 0
  121, DBUSER    , L0_Y17bis         , CC, 0, 0, 0, 0, 0, 0, YES, NO, SB , 2, 1.35, 0.
25, 0, 0, 0, 0, 0, 0, 0, 0
  122, DBUSER    , L0_Y18            , CC, 0, 0, 0, 0, 0, 0, YES, NO, SB , 2, 1.79, 0.
36, 0, 0, 0, 0, 0, 0, 0, 0
  700, DBUSER    , Pilastro fitt     , CC, 0, 0, 0, 0, 0, 0, YES, NO, SB , 2, 0.248, 0
.248, 0, 0, 0, 0, 0, 0, 0, 0
  701, DBUSER    , cordolo 40x21     , CC, 0, 0, 0, 0, 0, 0, YES, NO, SB , 2, 0.21, 0.
4, 0, 0, 0, 0, 0, 0, 0, 0
  702, DBUSER    , cordolo 30x21     , CC, 0, 0, 0, 0, 0, 0, YES, NO, SB , 2, 0.21, 0.
3, 0, 0, 0, 0, 0, 0, 0, 0
```

```
  703, DBUSER    , cordolo RIGID     , CC, 0, 0, 0, 0, 0, 0, YES, NO, SB , 2, 0.2, 0.4
, 0, 0, 0, 0, 0, 0, 0, 0
  704, DBUSER    , cordolo fitt      , CC, 0, 0, 0, 0, 0, 0, YES, NO, SB , 2, 0.2, 0.2
5, 0, 0, 0, 0, 0, 0, 0, 0
  707, DBUSER    , Pilastro 50x25    , CC, 0, 0, 0, 0, 0, 0, YES, NO, SB , 2, 0.5, 0.2
5, 0, 0, 0, 0, 0, 0, 0, 0
  708, DBUSER    , Trave             , CC, 0, 0, 0, 0, 0, 0, YES, NO, SB , 2, 0.25, 0.
55, 0, 0, 0, 0, 0, 0, 0, 0
  709, DBUSER    , Fascia 0.60x0.36  , CC, 0, 0, 0, 0, 0, 0, YES, NO, SB , 2, 0.6, 0.3
6, 0, 0, 0, 0, 0, 0, 0, 0
  710, DBUSER    , Fascia 1.45x0.25  , CC, 0, 0, 0, 0, 0, 0, YES, NO, SB , 2, 1.45, 0.
25, 0, 0, 0, 0, 0, 0, 0, 0
  711, DBUSER    , Fascia 0.95x0.25  , CC, 0, 0, 0, 0, 0, 0, YES, NO, SB , 2, 0.95, 0.
25, 0, 0, 0, 0, 0, 0, 0, 0
  712, DBUSER    , Fascia 0.45x0.36  , CC, 0, 0, 0, 0, 0, 0, YES, NO, SB , 2, 0.45, 0.
36, 0, 0, 0, 0, 0, 0, 0, 0
 1000, DBUSER    , LINE              , CC, 0, 0, 0, 0, 0, 0, YES, NO, SB , 2, 0.01, 0.
01, 0, 0, 0, 0, 0, 0, 0, 0

*STLDCASE    ; Static Load Cases
; LCNAME, LCTYPE, DESC
   PP   , D ,
   G1+G2 copertura A, D ,
   G1+G2 copertura B, D ,
   Q sottotetto, L ,
   sporto gronda, D ,
   Q neve, L ,
   SISMA X, E ,
   SISMA Y, E ,
   travi, D ,
   parapetto, D ,
   muro , D ,


*STORY    ; Story
;  NAME=NAME, LEVEL, bFLDIAP, WINDWX, WINDWY, WINDCX, WINDCY, ECCX, ECCY, IECCX, IECCY
, TAFX, TAFY, WTAFX, WTAFY, AreaPosNum ; line 1
;       AreaPosX1, AreaPosY1, AreaPosZ1, ...
                                        ; from line 2
   NAME=1F, -1, NO , 0.305, 8.265, 3.8525, 16.4675, 0.01525, 0.41325, 0, 0, 1, 1, 0.04
575, 1.23975, 0
   NAME=Roof, 3.35, YES, 0.305, 8.265, 3.8525, 16.4675, 0.01525, 0.41325, 0, 0, 1, 1,
0.04575, 1.23975, 0

*STORY-CHANGED-INFO    ; Story Changed Information
; iCHANGEDINFO
 0

*STORY-ECCEN    ; Story Eccentricity
; bIncludeEccSeis, bIncludeEccWind, EccSeis, EccWind
 YES, YES, 5, 15

*DGN-CONC    ; Concrete Design Code
; CODE=CODE, RHOC, RHOR, RHOW, MRF, SHR-RATIO { , METHOD, A1, A2, A2_COLM, bSCWB }
 ; line 1
; [ACI318-89]     : bSPECIAL, PHI-B, PHI-T, PHIC1, PHI-C2, PHI-V
 ; line 2
; [ACI318-95]     : bSPECIAL, PHI-B, PHI-T, PHIC1, PHI-C2, PHI-V
 ; line 2
; [ACI318-99]     : bSPECIAL, PHI-B, PHI-T, PHIC1, PHI-C2, PHI-V
 ; line 2
; [ACI318-02]     : bSPECIAL, PHI-B, PHI-T, PHIC1, PHI-C2, PHI-V, TLF, SLF, TSLCB
```

```
 ; line 2
; [ACI318-05]      : bSPECIAL, PHI-B, PHI-T, PHIC1, PHI-C2, PHI-V, TLF, SLF, TSLCB
 ; line 2
; [ACI318-08]      : bSPECIAL, PHI-B, PHI-T, PHIC1, PHI-C2, PHI-V, TLF, SLF, TSLCB, SPW
ALL, BNDR-MTHD, CD, IE, FRMTYPE, 2NDGRUP, RHOS, bTOR, TRFT; line 2
; [ACI318-11]      : bCHEKCBEAM, bSPECIAL, PHI-B, PHI-T, PHIC1, PHI-C2, PHI-V, TLF, SLF
, TSLCB, SPWALL, BNDR-MTHD, CD, IE, FRMTYPE, 2NDGRUP, RHOS, bTOR, TRFT; line 2
; [ACI318-14]      : bCHEKCBEAM, bSPECIAL, PHI-B, PHI-T, PHIC1, PHI-C2, PHI-V, TLF, SLF
, TSLCB, SPWALL, BNDR-MTHD, CD, IE, FRMTYPE, 2NDGRUP, RHOS, bTOR, TRFT, bBC-JOINT; lin
e 2
; [ACI318M-14]     : bCHEKCBEAM, bSPECIAL, PHI-B, PHI-T, PHIC1, PHI-C2, PHI-V, TLF, SLF
, TSLCB, SPWALL, BNDR-MTHD, CD, IE, FRMTYPE, 2NDGRUP, RHOS, bTOR, TRFT, bBC-JOINT; lin
e 2
; [NSR-10]         : bCHEKCBEAM, bSPECIAL, PHI-B, PHI-T, PHIC1, PHI-C2, PHI-V, TLF, SLF
, TSLCB, SPWALL, BNDR-MTHD, CD, IE, FRMTYPE, 2NDGRUP, RHOS, bBC-JOINT; line 2
; [AIK-USD94]      : bSPECIAL, PHI-B, PHI-T, PHIC1, PHI-C2, PHI-V
 ; line 2
; [TWN-USD92]      : bSPECIAL, PHI-B, PHI-T, PHIC1, PHI-C2, PHI-V, bTOR, TRFT, SCWB
 ; line 2
; [TWN-USD100]     : bSPECIAL, PHI-B, PHI-T, PHIC1, PHI-C2, PHI-V, bTOR, TRFT, SCWB
 ; line 2
; [KCI-USD99]      : bSPECIAL, PHI-B, PHI-T, PHIC1, PHI-C2, PHI-V, TLF, SLF, TSLCB
 ; line 2
; [KCI-USD03]      : bSPECIAL, PHI-B, PHI-T, PHIC1, PHI-C2, PHI-V, TLF, SLF, TSLCB
 ; line 2
; [KCI-USD07]      : bSPECIAL, PHI-B, PHI-T, PHIC1, PHI-C2, PHI-V, TLF, SLF, TSLCB, SPW
ALL, BNDR-MTHD, CD, IE, FRMTYPE, 2NDGRUP, bTOR, TRFT; line 2
; [KCI-USD12]      : bSPECIAL, PHI-B, PHI-T, PHIC1, PHI-C2, PHI-V, TLF, SLF, TSLCB, SPW
ALL, BNDR-MTHD, CD, IE, EXPOSURE, FRMTYPE, 2NDGRUP, bTOR, TRFT; line 2
; [BS8110-97]      : GAMMA-MC, GAMMA-MS, GAMMA-MV
 ; line 2
; [EUROCODE2]      : GAMMA-CF, GAMMA-CA, GAMMA-SF, GAMMA-SA, iSCODE
 ; line 2
; [EUROCODE2:04]   : GAMMA-CF, GAMMA-CA, GAMMA-SF, GAMMA-SA, ALPHACC, iSCODE,
 ; line 2
;                    bRULE, WEAK-FACT, iDUC, GAMMA-RD-B, GAMMA-RD-C, S-GRUP
 ; line 2
;                    FRAMETYPE, AUA1, SPLCK, SOILFACTOR, TB, TC, TD, AGR, I, DAMPINGRAT
, BCJOINT, NTC2008, UF, GAMMA-RD-W, GAMMA-RD-J ; line 2
;                    STRUT-ANG, bBEHAVIOR-FACT, BEHAVIOR-FACT-VALUE, iNTC, bVCWALL, bVC
COLM, dPHIEF, bAUTOA, bAUTOC, A, B, C, bTOR    ; line 2
;                    bSHELL, dSHELLHORIZ, DSHELLVERT    ; line 2
; [EUROCODE2-2:05]: GAMMA-CF, GAMMA-CA, GAMMA-SF, GAMMA-SA, GAMMA_CL, GAMMA_SL, ALPHAC
C, iSCODE, STRUT-ANG,; line 2
;                    bSHELL, dSHELLHORIZ, DSHELLVERT    ; line 2
; [IS456:2000]     : bSPECIAL, GAMMA-C, GAMMA-S, FOS, SubRex
 ; line 2
; [GB50010-02]     : bSPECIAL, GAMMA-C, GAMMA-S, KIND, iSlabType
 ; line 2
; [GB50010-10]     : bSPECIAL, GAMMA-C, GAMMA-S, KIND, iSlabType, bTOR, TRFT
 ; line 2
; [CSA-A23.3-94]   : bSPECIAL, PHI-C, PHI-S, PHI-M
 ; line 2
; [AIK-WSD2K]      : bSPECIAL
 ; line 2
; [AIJ-WSD99]      : bSPECIAL, KIND
 ; line 2
; [AASHTO-LRFD12] : bSPECIAL, PHI-B, PHI-T, PHI-C1, PHI-C2, PHI-V, KIND
 ; line 2
; [AASHTO-LRFD02] : bSPECIAL, PHI-B, PHI-T, PHI-C1, PHI-C2, PHI-V, KIND
 ; line 2
; [AASHTO-LFD96]  : bSPECIAL, PHI-B, PHI-T, PHI-C1, PHI-C2, PHI-V
```

```
 ; line 2
; [KSCE-USD05]     : bSPECIAL, PHI-B, PHI-T, PHI-C1, PHI-C2, PHI-V
 ; line 2
; [KSCE-USD96]     : bSPECIAL, PHI-B, PHI-T, PHI-C1, PHI-C2, PHI-V
 ; line 2
; [KSCE-RAIL-USE04] : bSPECIAL, PHI-B, PHI-T, PHI-C1, PHI-C2, PHI-V
 ; line 2
; [TWN-BRG-LSD90] : bSPECIAL, PHI-B, PHI-T, PHI-C1, PHI-C2, PHI-V
 ; line 2
; [JTJ023-85]      : GAMMA-C, GAMMA-S, KIND
 ; line 2
; [CSA-S6-00]      : bSPECIAL, PHI-C, PHI-S, KIND
 ; line 2
; [CSA-S6-14]      : bSPECIAL, PHI-C, PHI-S, KIND
 ; line 2
; [IRC:21-2000]    : GAMMA-C, GAMMA-S
 ; line 2
; [SNiP 2.05.03-84*]  : nBRIDGE, bmb7mb8, mb7mb8Type, mb7, mb8, bmb9, mb9Type, mb9
 ; line 2
; [SP 35.13330.2011]  : nBRIDGE, bmb7mb8, mb7mb8Type, mb7, mb8, bmb9, mb9Type, mb9
 ; line 2
; Member Check     : bBEAM, bCOLM, bBRCE, bWALL, bSLAB, bMAT, bRBEAM, bRCOLM, bRBRCE, b
RWALL, bRSLAB, bRMAT, bSBEAM, bCANTIL, bUNDER-BM/COLM
   CODE=Eurocode2:04, 0, 0, 0, 1, 0, , , , ,
   1.5, 1.2, 1.15, 1, 0.85, 0, NO, 1.3, 0, 1.2, 1.3, , 0, 1.1, 0, 1.2, 0.15, 0.5, 2, 0
.08, 1, 5, NO, 0, YES, 0.6, 1.2, 1.2, 45, NO, 1.5, 2, NO, NO, 2.14, NO, YES, 0.7, 1.1,
 1, NO, NO, 0, 0
   YES, YES, YES, YES, YES, YES, YES, YES, YES, YES, YES, YES, YES, YES, YES, 0

*CONSTRAINT    ; Supports
; NODE_LIST, CONST(Dx,Dy,Dz,Rx,Ry,Rz), GROUP
   89 90 249 477, 111111,

*REBAR-COLUMN    ; Modify Column Rebar Data
; iSEC, iSUBSEC, HOOP, RBNAME, bUseCornerRB, CornerRBNAME, iNQRB, iNROW, DO, SRBNAME,
SPACE, iSRBN1, iSRBN2, iBHJRN, SRBNAME_C, SPACE_C, iSRBN1_C, iSRBN2_C, bSameRebar
   22,    0, TIED, P16, YES, P18, 10, 5, 0.04, P12, 0.2, 2, 2, 0, P12, 0.2, 2, 2, YES
  707,    0, TIED, P14, NO, P14, 6, 3, 0.03, P8, 0.25, 2, 2, 0, P8, 0.25, 2, 2, YES

*FRAME-RLS    ; Beam End Release
; ELEM LIST, bVALUE, FLAG-i, Fxi, Fyi, Fzi, Mxi, Myi, Mzi        ; 1st line
;                    FLAG-j, Fxj, Fyj, Fzj, Mxj, Myj, Mzj, GROUP ; 2nd line
    14,  NO, 000001, 0, 0, 0, 0, 0, 0
             000000, 0, 0, 0, 0, 0, 0,
    15,  NO, 000001, 0, 0, 0, 0, 0, 0
             000000, 0, 0, 0, 0, 0, 0,
    16,  NO, 000001, 0, 0, 0, 0, 0, 0
             000000, 0, 0, 0, 0, 0, 0,
  6038,  NO, 000010, 0, 0, 0, 0, 0, 0
             000000, 0, 0, 0, 0, 0, 0,
  6046,  NO, 000000, 0, 0, 0, 0, 0, 0
             000010, 0, 0, 0, 0, 0, 0,
  6057,  NO, 000010, 0, 0, 0, 0, 0, 0
             000010, 0, 0, 0, 0, 0, 0,

*NODALMASS    ; Nodal Masses
; NODE_LIST, mX, mY, mZ, rmX, rmY, rmZ
   192 250 253, 0, 3.3, 0, 0, 0, 0

*LOADTOMASS    ; Load to Mass
; DIR, bNODAL, bBEAM, bFLOOR, bPRES, GRAV
; LCNAME1, FACTOR1, LCNAME2, FACTOR2, ...   ; from line 1
```

```
   XY, YES, YES, YES, YES, 9.806
   PP, 1, G1+G2 copertura A, 3.7, Q sottotetto, 0.3, sporto gronda, 2, travi, 3
   parapetto, 1.5, muro, 4.6

*USE-STLD, PP

*SELFWEIGHT    ; Self Weight
; X, Y, Z, GROUP
0, 0, -1,

; End of data for load case [PP] -------------------------

*USE-STLD, sporto gronda

*BEAMLOAD    ; Element Beam Loads
; ELEM_LIST, CMD, TYPE, DIR, bPROJ, [ECCEN], [VALUE], GROUP
; ELEM_LIST, CMD, TYPE, TYPE, DIR, VX, VY, VZ, bPROJ, [ECCEN], [VALUE], GROUP
; [VALUE]       : D1, P1, D2, P2, D3, P3, D4, P4
; [ECCEN]       : bECCEN, ECCDIR, I-END, J-END, bJ-END
; [ADDITIONAL]  : bADDITIONAL, ADDITIONAL_I-END, ADDITIONAL_J-END, bADDITIONAL_J-END
  6038, BEAM   , UNILOAD, GZ, NO , NO, aDir[1], , , , 0, -1, 1, -1, 0, 0, 0, 0, , NO,
0, 0, NO,
  6046, BEAM   , UNILOAD, GZ, NO , NO, aDir[1], , , , 0, -1, 1, -1, 0, 0, 0, 0, , NO,
0, 0, NO,
  6057, BEAM   , UNILOAD, GZ, NO , NO, aDir[1], , , , 0, -1, 1, -1, 0, 0, 0, 0, , NO,
0, 0, NO,

; End of data for load case [sporto gronda] -------------------------

*USE-STLD, SISMA X

*SEIS    ; Static Seismic Loads
; CODE=CODE, SFX, SFY, ECCX, ECCY, bACC, bINH, DESC, SFZR
   ; line 1
; [KS1992]   : SPT, EA, IF, PAX, PAY, PCX, PCY, RMFX, RMFY
   ; line 2
; [UBC1991]  : SPT, ZF, IF, PAX, PAY, PCX, PCY, NCX, NCY
   ; line 2
; [UBC1997]  : SPT, ZF, SST, CD, IF, PX, PY, NCX, NCY, PAX, PAY
   ; line 2
; [ATC306]   : SPC, EPV, PAX, PAY, PCX, PCY, RMFX, RMFY
   ; line 2
; [KS2000]   : SPT, EA, IF, PAX, PAY, PCX, PCY, RMFX, RMFY
   ; line 2
; [JIS]      : SPT, EA, SF, PAX, PAY, PCX, PCY, RMFX, RMFY, [JIS-AI]
   ; line 2
; [IBC2000]  : SDC, SC, MS, M1, IF, PX, PY, PCX, PCY, RMFX, RMFY
   ; line 2
; [EURO1996] : S, QO, KD, KR, KW, ALPHA, FPX, FPY
   ; line 2
; [CH2002]   : NSC, SFI, SC, ST, DR, EQ, bMM, FPX, FPY
   ; line 2
; [CHSH2003] : SFI, SC, ST, DR, EQ, bMM, FPX, FPY
   ; line 2
; [NBC1995]  : ZVR, AZ, VZ, IF, FF, PAX, PAY, PCX, PCY, FMFX, FMFY
   ; line 2
; [IS2002]   : SZ, ST, IF, DAMP, FPX, FPY, RFX, RFY
   ; line 2
; [TAIWAN99] : SZ, ST, IF, SMF, PM, PAX, PAY, PApX, PApY, PFX, PFY, RMFX, RMFY
   ; line 2
; [KBC2005]  : RA, SZ(Sds), SC(Sd1), SUG, bCPR, IF, iP, PAX, PAY, PApX, PApY, RMFX, RM
FY ; line 2
```

```
; [TAIWAN06] : SZ, Sds, Sd1, Sms, Sm1,Nda, Ndv,Nma, Nmv, ST, Fda, Fdv, Fma, Fmv, SubZ,

;  Sds_t, Sms_t, Td0_t, Tm0_t, IF, ALPHA, PM, PAX, PAY, PApX, PApY, PFX, PFY, RMFX, RM
FY ; line 2
; [EURO2004] : iGR, iSPE, S, TB, TC, TD, AG, Q, LBF, IF, FPX, FPY,
   ; line 2
; [JIS-AI]   : bUSER, STORY1, XDIR1, YDIR1, STORY2, XDIR2, YDIR2, ...
; [KBC2009]  : SZ, ZF, SC, CU, FA, Fv, SDS, SD1, SUG, IF, ip, PAX, PAY, PApX, PApY, RM
FX, RMFY
; [TAIWAN11] : SZ, Sds, Sd1, Sms, Sm1,Nda, Ndv,Nma, Nmv, ST, Fda, Fdv, Fma, Fmv, SubZ,

;  Sds_t, Sms_t, Td0_t, Tm0_t, IF, ALPHA, PM, PAX, PAY, PApX, PApY, PFX, PFY, RMFX, RM
FY ; line 2
; [NTC2008]  : iGR, iSPE, S, TB, TC, TD, AG, Q, AMPF, Tc*, FPX, FPY,
   ; line 2
; [CH2010]   : NSC, SFI, SC, ST, DR, EQ, bMM, FPX, FPY
   ; line 2
; [IBC2009]  : SC, Ss, S1, Fa, Fv, Sds, Sd1, Cu, TL, OC, IF, iP, PAX, PAY, PApX, PApY,
 RMFX, RMFY ; line 2
; [IBC2012]  : SC, Ss, S1, Fa, Fv, Sds, Sd1, Cu, TL, RC, IF, iP, PAX, PAY, PApX, PApY,
 RMFX, RMFY ; line 2
; [NTC2012]  : iGR, iSPE, S, TB, TC, TD, AG, Q, AMPF, Tc*, FPX, FPY,
   ; line 2
; [P100_2013]: iSPE, TB, TC, TD, AG, Q, IF, FPX, FPY
   ; line 2
; [IS1893_2016]: Zone, Soil, IF, Damp, Peri.X, Peri.Y, RsRdFact_X, RsRdFact_Y
   ; line 2
; [NTC2018]  : iGR, iSPE, S, TB, TC, TD, AG, Q, AMPF, Tc*, FPX, FPY,
   ; line 2
; SSTORY1, ESTORY1, ADDX1, ADDY1, ...
   ; from line 3
   CODE=NTC2018, 1, 0, POS, POS, NO, NO, , 0
        2, 4, 1.427, 0.147, 0.44, 2.336, 0.184, 1, 2.47, 0.273, 0, 0

; End of data for load case [SISMA X] -------------------------

*USE-STLD, SISMA Y

*SEIS    ; Static Seismic Loads
; CODE=CODE, SFX, SFY, ECCX, ECCY, bACC, bINH, DESC, SFZR
   ; line 1
; [KS1992]   : SPT, EA, IF, PAX, PAY, PCX, PCY, RMFX, RMFY
   ; line 2
; [UBC1991]  : SPT, ZF, IF, PAX, PAY, PCX, PCY, NCX, NCY
   ; line 2
; [UBC1997]  : SPT, ZF, SST, CD, IF, PX, PY, NCX, NCY, PAX, PAY
   ; line 2
; [ATC306]   : SPC, EPV, PAX, PAY, PCX, PCY, RMFX, RMFY
   ; line 2
; [KS2000]   : SPT, EA, IF, PAX, PAY, PCX, PCY, RMFX, RMFY
   ; line 2
; [JIS]      : SPT, EA, SF, PAX, PAY, PCX, PCY, RMFX, RMFY, [JIS-AI]
   ; line 2
; [IBC2000]  : SDC, SC, MS, M1, IF, PX, PY, PCX, PCY, RMFX, RMFY
   ; line 2
; [EURO1996] : S, QO, KD, KR, KW, ALPHA, FPX, FPY
   ; line 2
; [CH2002]   : NSC, SFI, SC, ST, DR, EQ, bMM, FPX, FPY
   ; line 2
; [CHSH2003] : SFI, SC, ST, DR, EQ, bMM, FPX, FPY
   ; line 2
; [NBC1995]  : ZVR, AZ, VZ, IF, FF, PAX, PAY, PCX, PCY, FMFX, FMFY
```

```
   ; line 2
; [IS2002]   : SZ, ST, IF, DAMP, FPX, FPY, RFX, RFY
   ; line 2
; [TAIWAN99] : SZ, ST, IF, SMF, PM, PAX, PAY, PApX, PApY, PFX, PFY, RMFX, RMFY
   ; line 2
; [KBC2005]  : RA, SZ(Sds), SC(Sd1), SUG, bCPR, IF, iP, PAX, PAY, PApX, PApY, RMFX, RM
FY ; line 2
; [TAIWAN06] : SZ, Sds, Sd1, Sms, Sm1,Nda, Ndv,Nma, Nmv, ST, Fda, Fdv, Fma, Fmv, SubZ,

;  Sds_t, Sms_t, Td0_t, Tm0_t, IF, ALPHA, PM, PAX, PAY, PApX, PApY, PFX, PFY, RMFX, RM
FY ; line 2
; [EURO2004] : iGR, iSPE, S, TB, TC, TD, AG, Q, LBF, IF, FPX, FPY,
   ; line 2
; [JIS-AI]   : bUSER, STORY1, XDIR1, YDIR1, STORY2, XDIR2, YDIR2, ...
; [KBC2009]  : SZ, ZF, SC, CU, FA, Fv, SDS, SD1, SUG, IF, ip, PAX, PAY, PApX, PApY, RM
FX, RMFY
; [TAIWAN11] : SZ, Sds, Sd1, Sms, Sm1,Nda, Ndv,Nma, Nmv, ST, Fda, Fdv, Fma, Fmv, SubZ,

;  Sds_t, Sms_t, Td0_t, Tm0_t, IF, ALPHA, PM, PAX, PAY, PApX, PApY, PFX, PFY, RMFX, RM
FY ; line 2
; [NTC2008]  : iGR, iSPE, S, TB, TC, TD, AG, Q, AMPF, Tc*, FPX, FPY,
   ; line 2
; [CH2010]   : NSC, SFI, SC, ST, DR, EQ, bMM, FPX, FPY
   ; line 2
; [IBC2009]  : SC, Ss, S1, Fa, Fv, Sds, Sd1, Cu, TL, OC, IF, iP, PAX, PAY, PApX, PApY,
 RMFX, RMFY ; line 2
; [IBC2012]  : SC, Ss, S1, Fa, Fv, Sds, Sd1, Cu, TL, RC, IF, iP, PAX, PAY, PApX, PApY,
 RMFX, RMFY ; line 2
; [NTC2012]  : iGR, iSPE, S, TB, TC, TD, AG, Q, AMPF, Tc*, FPX, FPY,
   ; line 2
; [P100_2013]: iSPE, TB, TC, TD, AG, Q, IF, FPX, FPY
   ; line 2
; [IS1893_2016]: Zone, Soil, IF, Damp, Peri.X, Peri.Y, RsRdFact_X, RsRdFact_Y
   ; line 2
; [NTC2018]  : iGR, iSPE, S, TB, TC, TD, AG, Q, AMPF, Tc*, FPX, FPY,
   ; line 2
; SSTORY1, ESTORY1, ADDX1, ADDY1, ...
   ; from line 3
   CODE=NTC2018, 0, 1, POS, POS, NO, NO, , 0
        2, 4, 1.427, 0.147, 0.44, 2.336, 0.184, 1, 2.47, 0.273, 0, 0

; End of data for load case [SISMA Y] -------------------------

*USE-STLD, travi

*BEAMLOAD    ; Element Beam Loads
; ELEM_LIST, CMD, TYPE, DIR, bPROJ, [ECCEN], [VALUE], GROUP
; ELEM_LIST, CMD, TYPE, TYPE, DIR, VX, VY, VZ, bPROJ, [ECCEN], [VALUE], GROUP
; [VALUE]       : D1, P1, D2, P2, D3, P3, D4, P4
; [ECCEN]       : bECCEN, ECCDIR, I-END, J-END, bJ-END
; [ADDITIONAL]  : bADDITIONAL, ADDITIONAL_I-END, ADDITIONAL_J-END, bADDITIONAL_J-END
  6046, BEAM   , UNILOAD, GZ, NO , NO, aDir[1], , , , 0, -1, 1, -1, 0, 0, 0, 0, , NO,
0, 0, NO,
  6057, BEAM   , UNILOAD, GZ, NO , NO, aDir[1], , , , 0, -1, 1, -1, 0, 0, 0, 0, , NO,
0, 0, NO,

; End of data for load case [travi] -------------------------

*SFUNCTION    ; Spectrum Function
; FUNC=NAME, iTYPE, iMETHOD, SCALE/MAX, GRAV, DRATIO, DESC, RMF      ; line 1
;   SPEC_CODE, [CODE_DATA]                                            ; line 2
;      PERIOD1, VALUE1, PERIOD2, VALUE2, ...                          ; from line 3
```

```
;[CODE_DATA] : NSC, SFI, SC, EQ, TG, DP, MaxEQ
        ; CH2001
;[CODE_DATA] : NSC, SFI, SC, EQ, TG, DP, MaxEQ, nLForce              ; CH2010
;[CODE_DATA] : SFI, SC, EQ, TG, DP, MaxEQ                            ; CHSH2003
;[CODE_DATA] : DIV, SC, SFI, EQ, TG, G                               ; GB50111_2006
;[CODE_DATA] : BT, ZM, ST, SI, SC, TG, CI, CS, CD, EPA, SMAX, PERIOD ; JTG/T B02-01-20
08
;[CODE_DATA] : iSPE, SParam, TB, TC, TD, AG, Q, IF, FPX, FPY         ; P100-1(2013)
   FUNC=Muscoline_T1_C_q=1__CU III, 1, 0, 1, 9.806, 0.05, , 1.000000
   USER
          0.000000,         0.263,   0.007000,         0.282
          0.015000,         0.301,   0.022000,          0.32
          0.029000,          0.34,   0.037000,         0.359
          0.044000,         0.378,   0.051000,         0.398
          0.059000,         0.417,   0.066000,         0.436
          0.073000,         0.456,   0.081000,         0.475
          0.088000,         0.494,   0.095000,         0.513
          0.103000,         0.533,   0.110000,         0.552
          0.117000,         0.571,   0.125000,         0.591
          0.132000,          0.61,   0.139000,         0.629
          0.147000,         0.648,   0.161000,         0.648
          0.176000,         0.648,   0.191000,         0.648
          0.206000,         0.648,   0.220000,         0.648
          0.235000,         0.648,   0.250000,         0.648
          0.264000,         0.648,   0.279000,         0.648
          0.294000,         0.648,   0.308000,         0.648
          0.323000,         0.648,   0.338000,         0.648
          0.352000,         0.648,   0.367000,         0.648
          0.382000,         0.648,   0.396000,         0.648
          0.411000,         0.648,   0.426000,         0.648
          0.440000,         0.648,   0.535000,         0.534
          0.630000,         0.453,   0.725000,         0.394
          0.820000,         0.349,   0.914000,         0.312
          1.009000,         0.283,   1.104000,         0.259
          1.199000,         0.238,   1.293000,         0.221
          1.388000,         0.206,   1.483000,         0.193
          1.578000,         0.181,   1.672000,         0.171
          1.767000,         0.162,   1.862000,         0.153
          1.957000,         0.146,   2.051000,         0.139
          2.146000,         0.133,   2.241000,         0.127
          2.336000,         0.122,   2.419000,         0.114
          2.502000,         0.107,   2.585000,           0.1
          2.669000,         0.094,   2.752000,         0.088
          2.835000,         0.083,   2.918000,         0.078
          3.001000,         0.074,   3.085000,          0.07
          3.168000,         0.066,   3.251000,         0.063
          3.334000,          0.06,   3.418000,         0.057
          3.501000,         0.054,   3.584000,         0.052
          3.667000,          0.05,   3.750000,         0.047
          3.834000,         0.045,   3.917000,         0.043
          4.000000,         0.042

*SPLDCASE    ; Spectrum Load Cases
; NAME=NAME, DIR, ANGLE, SCALE, PMFT, bDAMP, bECC, INTERP, DESC,       ; line 1
;      COMTYPE, bADDSIGN, iSIGNTYPE, bMODE, bASA, iMAJ                 ; line 2
;      FUNC1, FUNC2, FUNC3, ...                                        ; line 3
;      bUSE1, dFACTOR1, bUSE2, dFACTOR2, ..., bUSEn, dFACTORn          ; line 4      (
bMODE=YES)
;      bCDR, [DR-DC]                                                   ; line 5      (
bDAMP=YES)
;      SMETHOD, bAUTO, ECC, bCONSGL, bTORMOMENT                        ; line 6      (
bECC=YES)
```

```
;       STORY1, ECC1, STORY2, ECC2, ..., STORYn, ECCn                    ; from line 7 (
bECC=YES)
; [DR-DC] : iMDTYPE, DALL, iMODE1, DAMPING1, iMODE2, DAMPING2, ...      ; iMDTYPE=1
;         : iMDTYPE, iCOEF, bMASSP, MASSC, bSTIFFP, STIFFC              ; iMDTYPE=2, iC
OEF=1
;         : iMDTYPE, iCOEF, iCALC, bMASSP, FP1, DR1, bSTIFFP, FP2, DR2 ; iMDTYPE=2, iC
OEF=2
;         : iMDTYPE                                                     ; iMDTYPE=3
   NAME=sisma_x, XY, 0, 1, 1, NO, YES, LOG,
        CQC, YES, 0, YES, NO, 0
        Muscoline_T1_C_q=1__CU III
        YES, 1,YES, 1,YES, 1,YES, 1,YES, 1,YES, 1,YES, 1,YES, 1,YES, 1,YES, 1,YES, 1,Y
ES, 1,YES, 1,YES, 1,YES, 1,YES, 1,YES, 1,YES, 1,YES, 1,YES, 1,YES, 1,YES, 1,YES
, 1,YES, 1
        0, YES, 5, YES, NO
        Roof, 0.41325, 1F, 0.41325

   NAME=sisma_y, XY, 90, 1, 1, NO, YES, LOG,
        CQC, YES, 0, YES, NO, 0
        Muscoline_T1_C_q=1__CU III
        YES, 1,YES, 1,YES, 1,YES, 1,YES, 1,YES, 1,YES, 1,YES, 1,YES, 1,YES, 1,YES, 1,Y
ES, 1,YES, 1,YES, 1,YES, 1,YES, 1,YES, 1,YES, 1,YES, 1,YES, 1,YES, 1,YES, 1,YES
, 1,YES, 1
        0, YES, 5, YES, NO
        Roof, 0.01525, 1F, 0.01525



*PUSHOVER-CTRL    ; Pushover Global Control
; GEOM, bPERMIT, STEP, iMAX, bDISP, bFORCE, bENERGY, DNORM, FNORM, ENORM, bSTOP, bBEAM
, bWALL, METHOD, bAXIS, bAXISBEAM, bAXISWALL, bAXISTRUSS, SUPPORT, ELASTIC, bSUPPORT,
bSUPPORTUPLIFT, bSUPPORTCOLLAPSE, ; 1st line : Analysis Option
; NODECONNECTIVITY, nBEAMy, nBEAMz, bWALL, nWALLy, nWALLz, dR, WSize, bMEMB, nRCCODE,
bUseRef, bGraph, bCurve ; 1st line(2) : Analysis Option
; bSYMMETRIC, a1(+), a1(-), a2(+), a2(-)                               ; 2nd line : De
fault Stiffness Ratio(Trilinear)
; bSYMMETRIC, a1(+), a1(-)                                             ; 3rd line : De
fault Stiffness Ratio(Bilinear)
; BM_POS, bBUCKLING, bCR_AIJ, bIgnoreElem                              ; 4th line
; BM_POS, bBUCKLING, bCR_AIJ, 1, CF, WAL, bBTL, BTL, bERTH, ERTH, bSBR, SBR, GRP ; 4th
 line (Eurocode)
; BM_POS, bBUCKLING, bCR_AIJ, 2, bAXIAL_AIJ                            ; 4th line (AIJ
)
; LCNAME1, FACT1, LCNAME2, FACT2, ...                                  ; from line 5th
 line  : Initial Load
; LCTYPE1, LCTYPE2, ...                                                ; Last line
       : Initial Load
   0, YES, 10, 10, YES, NO, NO, 0.001, 0.001, 0.001, NO, YES, NO, 0, NO, YES, NO, NO,
0, 1, NO, NO, NO, 1, 15, 15, NO, EQUAL, 20, 10, 0.4, NO, 0, NO, YES, YES
   YES, 0.1, 0.1, 0.05, 0.05
   YES, 0.05, 0.05
   I, NO, YES, YES, 1, 1, 1.6, NO, 1.6, NO, 0.85, NO, 0.575,
   PP, 1, G1+G2 copertura A, 3.7, G1+G2 copertura B, 1.5, Q sottotetto, 0.3
   sporto gronda, 2, travi, 3, parapetto, 1.5, muro, 4.6
   1, 1, 1, 1, 1, 1, 1, 1
*HINGE-TYPE    ; Pushover Hinge Type/Properties
; NAME=NAME, DESC                                                      ;
1st line
; ELEM_TYP, WALL_TYP, MAT_TYP, DEFINITION, INTERACTION, bHINGELENGTH, INTEGRATION   ;
2nd line (ELEM_TYP=WALL)
; ELEM_TYP, MAT_TYP, DEFINITION, INTERACTION , bHINGELENGTH, INTEGRATION            ;
2nd line
```

```
; HINGE_TYPE, PROP, FIBER, FIBER_AUTO, AUTO_R, R, AUTO_OUTPL, OUTPL                ;
3rd line
; bFx, HLOC[NSECT], [DISTR], [RAT_I], [RAT_J], SKCV, [M_PROP]   ; 4rd line
; bFy, HLOC[NSECT], [DISTR], [RAT_I], [RAT_J], SKCV, [M_PROP]   ; 5th line
; bFz, HLOC[NSECT], [DISTR], [RAT_I], [RAT_J], SKCV, [M_PROP]   ; 6th line
; bMx, HLOC[NSECT], [DISTR], [RAT_I], [RAT_J], SKCV, [M_PROP]   ; 7th line
; bMy, HLOC[NSECT], [DISTR], [RAT_I], [RAT_J], SKCV, [M_PROP]   ; 8th line
; bMz, HLOC[NSECT], [DISTR], [RAT_I], [RAT_J], SKCV, [M_PROP]   ; 9th line
; CALC, bSYM-IJ, [YSDATA]-I, [YSDATA]-J                 ; 10th line (MAT_TYPE=RC,STEE
L, INTERACTION=PMM)
; BLDG_TYPE, COMP, SHEAR, COEFF                         ; 10th line (MAT_TYPE=MASONRY
,  DEFINITION=PIER)
; COMP, SHEAR, FORC                                     ; 10th line (MAT_TYPE=MASONRY
,  DEFINITION=SPAN)
; [M_PROP] : CALC, TYPE, [PROP]
    ; (SKCV=BI,TRI,SLBI,SLTR)
; [M_PROP] : CALC, TYPE, bSYM_IJ, [PROP]-I, [PROP]-J
    ; (SKCV=BI,TRI,SLBI,SLTR, HLOC=IJ)
; [M_PROP] : CALC, [FEMA]
    ; (SKCV=FEMA)
; [M_PROP] : CALC, [EC8]
    ; (SKCV=EC8)
; [M_PROP] : CALC, bSYM_IJ, [FEMA]-I  [FEMA]-J
    ; (SKCV=FEMA, HLOC=IJ)
; [PROP] : bSYM, RATIO_OPT, [DATA]-TENS, [DATA]-COMP, STIF_METHOD, STIFF
    ; (SKCV=BI,TRI)
; [PROP] : bSYM, RATIO_OPT, [DATA]-TENS, [DATA]-COMP, STIF_METHOD, STIFF, bAutoSpan, S
PAN ; (SKCV=TRI, RATIO_OPT=AIJ)
; [PROP] : SLIP_TYPE, RATIO_OPT, [DATA]-TENS, [DATA]-COMP, STIF_METHOD, STIFF, IGT, IG
C    ; (SKCV=SLBI,SLTR)
; [DATA] : YS-P1, YS-P2, YS-P3, SRR1, SRR2, SRRy,
    ; (TYPE=RATIO)
; [DATA] : YS-P1, YS-P2, YS-P3, YD-D1, YD-D2, YD-D3
    ; (TYPE=DEFORM)
; [FEMA] : DEFORM, bSYM, bMULT, SUBCOUNT, YS-P1P, YS-P1N, bUSER-D, YD-D1P, YD-D1N,
;        : STIF_METHOD, STIFF, IO-P, LS-P, CP-P, IO-N, LS-N, CP-N, bUSER-RATIO
;        : bSHAPE, SHAPE, bSTRLOSS, STRLOSS, INFILLTYPE, bTOTALSTRLOSS, TOTALSTRLOSS,
UNLOADTYPE, dEXP, dPRFACT, INFILLSTIFF, KMI, KMS, HM, TM
;        : EN-FR, DN-FR, CN-FR, BN-FR, A-FR, BP-FR, CP-FR, DP-FR, EP-FR  ; F/FY or M/M
Y
;        : EN-DR, DN-DR, CN-DR, BN-DR, A-DR, BP-DR, CP-DR, DP-DR, EP-DR  ; D/DY
;        : AXIAL, IO-P, LS-P, CP-P, IO-N, LS-N, CP-N                     ; (bMULT=YES)
, Loop  SUBCOUNT
;        : EN-FR, DN-FR, CN-FR, BN-FR, A-FR, BP-FR, CP-FR, DP-FR, EP-FR  ; (bMULT=YES)
 F/FY or M/MY
;        : EN-DR, DN-DR, CN-DR, BN-DR, A-DR, BP-DR, CP-DR, DP-DR, EP-DR  ; (bMULT=YES)
 D/DY
; [EC8]  : bSYM, bMULT, SUBCOUNT, YS-P1P, YS-P1N, bUSER-D, YD-D1P, YD-D1N,
;        : STIF_METHOD, STIFF-P, STIFF-M, IO-P, LS-P, CP-P, IO-N, LS-N, CP-N, bUSER-RA
TIO
;        : EN-FR, DN-FR, CN-FR, BN-FR, A-FR, BP-FR, CP-FR, DP-FR, EP-FR  ; F/FY or M/M
Y
;        : EN-DR, DN-DR, CN-DR, BN-DR, A-DR, BP-DR, CP-DR, DP-DR, EP-DR  ; D/DY
; [YSDATA] : bSYM-YZ, bSYM-PN, PC0, PMAX,
;          : MY1-P, MY1-N, MY2-P, MY2-N, MZ1-P, MZ1-N, MZ2-P, MZ2-N,
;          : INTPOLATION, ALPHA, bSYM-Y, bSYM-Z, [YSPROP]-1ST,  [YSPROP]-2ND
; [YSPROP] : PY1P, PY2P, PY3P,..., PY10P, PY11P, MY1P, MY2P,..., MY10P, MY11P
;          : PY1N, PY2N, PY3N,..., PY10N, PY11N, MY1N, MY2N,..., MY10N, MY11N
;          : PZ1P, PZ2P, PZ3P,..., PZ10P, PZ11P, MZ1P, MZ2P,..., MZ10P, MZ11P
;          : PZ1N, PZ2N, PZ3N,..., PZ10N, PZ11N, MZ1N, MZ2N,..., MZ10N, MZ11N
  NAME=Maschi MA, Maschi
    BEAM, , MASONRY, PIER, NONE, NO, 0, 0.5, 0.5, 0.5, 0.5, YES
```

```
    0, 0, 0, 1, 0, 0.4, 0, NO, NONE
    YES, C, FEMA, USER, \
      D/DY, NO, NO, 1, 1, 1, NO, 0, 0, , ELASTIC, 0, 2, 4, 6, 2, 4, 6, YES, \
      NO, GENERAL, NO, YES, FULL, NO, NO, NO, ORIGIN_ORIENTED, 0.4, 0.5, ELASTIC, 2000
, 500, 1, 1, \
      -1.75, -1.75, -1.75, -1, 0, 5, 5, 5, 5, \
      -0.2, -0.2, -1, -1, 0, 0, 0, 0, 0
    NO
    YES, C, FEMA, USER, \
      D/DY, YES, NO, 1, 1, 1, NO, 0, 0, , ELASTIC, 0, 2, 4, 6, 2, 4, 6, YES, \
      NO, GENERAL, NO, YES, FULL, NO, NO, NO, ORIGIN_ORIENTED, 0.4, 0.5, ELASTIC, 2000
, 500, 1, 1, \
      -0.006, -0.004, -0.004, -0.001, 0, 0.001, 0.004, 0.004, 0.006, \
      -0.3, -0.3, -1.001, -1, 0, 1, 1.001, 0.3, 0.3
    NO
    YES, IJ, FEMA, USER, YES, \
      D/DY, YES, NO, 1, 1, 1, NO, 0, 0, , 6EI, 0, 2, 4, 6, 2, 4, 6, YES, \
      NO, GENERAL, NO, YES, FULL, NO, NO, NO, ORIGIN_ORIENTED, 0.4, 0.5, ELASTIC, 2000
, 500, 1, 1, \
      -0.009, -0.006, -0.006, -0.001, 0, 0.001, 0.006, 0.006, 0.009, \
      -0.3, -0.3, -1.001, -1, 0, 1, 1.001, 0.3, 0.3, \
      D/DY, YES, NO, 1, 1, 1, NO, 0, 0, , 6EI, 0, 2, 4, 6, 2, 4, 6, YES, \
      NO, GENERAL, NO, YES, FULL, NO, NO, NO, ORIGIN_ORIENTED, 0.4, 0.5, ELASTIC, 2000
, 500, 1, 1, \
      -0.009, -0.006, -0.006, -0.001, 0, 0.001, 0.006, 0.006, 0.009, \
      -0.3, -0.3, -1.001, -1, 0, 1, 1.001, 0.3, 0.3
    NO
    EXIST, 2560, 67, 0.85
  NAME=Pilastri c.a.,
    BEAM, , RC, MTHETA, PMM, NO, 0, 0.5, 0.5, 0.5, 0.5, YES
    0, 0, 0, 1, 0, 0.4, 0, NO, NONE
    YES, IJ, EC8, AUTO, YES, \
      D/DY, NO, NO, 1, 1, 1, NO, 1, 1, 1, ELASTIC, 0, 0, 1.25, 4, 6, 1, 1, 1, NO, \
      NO, GENERAL, NO, YES, FULL, NO, NO, NO, ORIGIN_ORIENTED, 0.4, 0.5, ELASTIC, 2000
, 500, 1, 1, \
      -8, -1.01, -1.01, -1, 0, 1, 6, 6, 8, \
      -0.2, -0.2, -1, -1, 0, 1, 1.001, 0.2, 0.2, \
      D/DY, NO, NO, 1, 1, 1, NO, 1, 1, 1, ELASTIC, 0, 0, 1.25, 4, 6, 1, 1, 1, NO, \
      NO, GENERAL, NO, YES, FULL, NO, NO, NO, ORIGIN_ORIENTED, 0.4, 0.5, ELASTIC, 2000
, 500, 1, 1, \
      -8, -1.01, -1.01, -1, 0, 1, 6, 6, 8, \
      -0.2, -0.2, -1, -1, 0, 1, 1.001, 0.2, 0.2
    YES, IJ, EC8, AUTO, YES, \
      D/DY, NO, NO, 1, 1, 1, NO, 1, 1, , ELASTIC, 0, 0, 1, 1, 1, 1, 1, 1, NO, \
      NO, GENERAL, NO, YES, FULL, NO, NO, NO, ORIGIN_ORIENTED, 0.4, 0.5, ELASTIC, 2000
, 500, 1, 1, \
      -8, -1.01, -1.01, -1, 0, 1, 1.01, 1.01, 8, \
      -0.2, -0.2, -1, -1, 0, 1, 1, 0.2, 0.2, \
      D/DY, NO, NO, 1, 1, 1, NO, 1, 1, , ELASTIC, 0, 0, 1, 1, 1, 1, 1, 1, NO, \
      NO, GENERAL, NO, YES, FULL, NO, NO, NO, ORIGIN_ORIENTED, 0.4, 0.5, ELASTIC, 2000
, 500, 1, 1, \
      -8, -1.01, -1.01, -1, 0, 1, 1.01, 1.01, 8, \
      -0.2, -0.2, -1, -1, 0, 1, 1, 0.2, 0.2
    YES, IJ, EC8, AUTO, YES, \
      D/DY, NO, NO, 1, 1, 1, NO, 1, 1, , ELASTIC, 0, 0, 1, 1, 1, 1, 1, 1, NO, \
      NO, GENERAL, NO, YES, FULL, NO, NO, NO, ORIGIN_ORIENTED, 0.4, 0.5, ELASTIC, 2000
, 500, 1, 1, \
      -8, -1.01, -1.01, -1, 0, 1, 1.01, 1.01, 8, \
      -0.2, -0.2, -1, -1, 0, 1, 1, 0.2, 0.2, \
      D/DY, NO, NO, 1, 1, 1, NO, 1, 1, , ELASTIC, 0, 0, 1, 1, 1, 1, 1, 1, NO, \
      NO, GENERAL, NO, YES, FULL, NO, NO, NO, ORIGIN_ORIENTED, 0.4, 0.5, ELASTIC, 2000
, 500, 1, 1, \
```

```
      -8, -1.01, -1.01, -1, 0, 1, 1.01, 1.01, 8, \
      -0.2, -0.2, -1, -1, 0, 1, 1, 0.2, 0.2
    NO
    YES, IJ, EC8, AUTO, YES, \
      D/DY, NO, NO, 1, 1, 1, NO, 1, 1, 1, 6EI, 1, 1, 1, 0.75, 1, 1, 0.75, 1, NO, \
      NO, GENERAL, NO, YES, FULL, NO, NO, NO, ORIGIN_ORIENTED, 0.4, 0.5, ELASTIC, 2000
, 500, 1, 1, \
      -12, -9, -9, -1, 0, 1, 9, 9, 12, \
      -0.2, -0.2, -1.001, -1, 0, 1, 1.001, 0.2, 0.2, \
      D/DY, NO, NO, 1, 1, 1, NO, 1, 1, 1, 6EI, 1, 1, 1, 0.75, 1, 1, 0.75, 1, NO, \
      NO, GENERAL, NO, YES, FULL, NO, NO, NO, ORIGIN_ORIENTED, 0.4, 0.5, ELASTIC, 2000
, 500, 1, 1, \
      -12, -9, -9, -1, 0, 1, 9, 9, 12, \
      -0.2, -0.2, -1.001, -1, 0, 1, 1.001, 0.2, 0.2
    YES, IJ, EC8, AUTO, YES, \
      D/DY, NO, NO, 1, 1, 1, NO, 1, 1, 1, 6EI, 1, 1, 1, 0.75, 1, 1, 0.75, 1, NO, \
      NO, GENERAL, NO, YES, FULL, NO, NO, NO, ORIGIN_ORIENTED, 0.4, 0.5, ELASTIC, 2000
, 500, 1, 1, \
      -12, -9, -9, -1, 0, 1, 9, 9, 12, \
      -0.2, -0.2, -1.001, -1, 0, 1, 1.001, 0.2, 0.2, \
      D/DY, NO, NO, 1, 1, 1, NO, 1, 1, 1, 6EI, 1, 1, 1, 0.75, 1, 1, 0.75, 1, NO, \
      NO, GENERAL, NO, YES, FULL, NO, NO, NO, ORIGIN_ORIENTED, 0.4, 0.5, ELASTIC, 2000
, 500, 1, 1, \
      -12, -9, -9, -1, 0, 1, 9, 9, 12, \
      -0.2, -0.2, -1.001, -1, 0, 1, 1.001, 0.2, 0.2
    AUTO, YES, NO, YES, 0.5, 1, 0.5, 0.5, 1, 1, 0.5, 0.5, 1, 1, ELLIPSE, 2, YES, YES,
\
      1, 0.8, 0.6, 0.4, 0.2, 0, -0.2, -0.4, -0.6, -0.8, -1, 0, 0.3, 0.6, 0.8, 0.9, 1,
0.9, 0.8, 0.6, 0.3, 0, \
      1, 0.8, 0.6, 0.4, 0.2, 0, -0.2, -0.4, -0.6, -0.8, -1, -0, -0.3, -0.6, -0.8, -0.9
, -1, -0.9, -0.8, -0.6, -0.3, -0, \
      1, 0.8, 0.6, 0.4, 0.2, 0, -0.2, -0.4, -0.6, -0.8, -1, 0, 0.3, 0.6, 0.8, 0.9, 1,
0.9, 0.8, 0.6, 0.3, 0, \
      1, 0.8, 0.6, 0.4, 0.2, 0, -0.2, -0.4, -0.6, -0.8, -1, -0, -0.3, -0.6, -0.8, -0.9
, -1, -0.9, -0.8, -0.6, -0.3, -0, \
      1, 0.8, 0.6, 0.4, 0.2, 0, -0.2, -0.4, -0.6, -0.8, -1, 0, 0.3, 0.6, 0.8, 0.9, 1,
0.9, 0.8, 0.6, 0.3, 0, \
      1, 0.8, 0.6, 0.4, 0.2, 0, -0.2, -0.4, -0.6, -0.8, -1, -0, -0.3, -0.6, -0.8, -0.9
, -1, -0.9, -0.8, -0.6, -0.3, -0, \
      1, 0.8, 0.6, 0.4, 0.2, 0, -0.2, -0.4, -0.6, -0.8, -1, 0, 0.3, 0.6, 0.8, 0.9, 1,
0.9, 0.8, 0.6, 0.3, 0, \
      1, 0.8, 0.6, 0.4, 0.2, 0, -0.2, -0.4, -0.6, -0.8, -1, -0, -0.3, -0.6, -0.8, -0.9
, -1, -0.9, -0.8, -0.6, -0.3, -0 , \
      NO, YES, 0.5, 1, 0.5, 0.5, 1, 1, 0.5, 0.5, 1, 1, ELLIPSE, 2, YES, YES, \
      1, 0.8, 0.6, 0.4, 0.2, 0, -0.2, -0.4, -0.6, -0.8, -1, 0, 0.3, 0.6, 0.8, 0.9, 1,
0.9, 0.8, 0.6, 0.3, 0, \
      1, 0.8, 0.6, 0.4, 0.2, 0, -0.2, -0.4, -0.6, -0.8, -1, -0, -0.3, -0.6, -0.8, -0.9
, -1, -0.9, -0.8, -0.6, -0.3, -0, \
      1, 0.8, 0.6, 0.4, 0.2, 0, -0.2, -0.4, -0.6, -0.8, -1, 0, 0.3, 0.6, 0.8, 0.9, 1,
0.9, 0.8, 0.6, 0.3, 0, \
      1, 0.8, 0.6, 0.4, 0.2, 0, -0.2, -0.4, -0.6, -0.8, -1, -0, -0.3, -0.6, -0.8, -0.9
, -1, -0.9, -0.8, -0.6, -0.3, -0, \
      1, 0.8, 0.6, 0.4, 0.2, 0, -0.2, -0.4, -0.6, -0.8, -1, 0, 0.3, 0.6, 0.8, 0.9, 1,
0.9, 0.8, 0.6, 0.3, 0, \
      1, 0.8, 0.6, 0.4, 0.2, 0, -0.2, -0.4, -0.6, -0.8, -1, -0, -0.3, -0.6, -0.8, -0.9
, -1, -0.9, -0.8, -0.6, -0.3, -0, \
      1, 0.8, 0.6, 0.4, 0.2, 0, -0.2, -0.4, -0.6, -0.8, -1, 0, 0.3, 0.6, 0.8, 0.9, 1,
0.9, 0.8, 0.6, 0.3, 0, \
      1, 0.8, 0.6, 0.4, 0.2, 0, -0.2, -0.4, -0.6, -0.8, -1, -0, -0.3, -0.6, -0.8, -0.9
, -1, -0.9, -0.8, -0.6, -0.3, -0
  NAME=Pilastri fitt MA, Pilastri fitt
    BEAM, , MASONRY, PIER, NONE, NO, 0, 0.5, 0.5, 0.5, 0.5, YES
```

```
    0, 0, 0, 1, 0, 0.4, 0, NO, NONE
    YES, C, FEMA, USER, \
      D/DY, NO, NO, 1, 1, 1, NO, 0, 0, , ELASTIC, 0, 2, 4, 6, 2, 4, 6, YES, \
      NO, GENERAL, NO, YES, FULL, NO, NO, NO, ORIGIN_ORIENTED, 0.4, 0.5, ELASTIC, 2000
, 500, 1, 1, \
      -1.75, -1.75, -1.75, -1, 0, 5, 5, 5, 5, \
      -0.2, -0.2, -1, -1, 0, 0, 0, 0, 0
    NO
    NO
    NO
    NO
    NO
    EXIST, 1926, 37, 0.85
  NAME=Fasce MA, Fasce
    BEAM, , MASONRY, SPAN, NONE, NO, 0, 0.5, 0.5, 0.5, 0.5, YES
    0, 0, 0, 1, 0, 0.4, 0, NO, NONE
    YES, C, FEMA, USER, \
      D/DY, NO, NO, 1, 1, 1, NO, 0, 0, , ELASTIC, 0, 2, 4, 6, 2, 4, 6, YES, \
      NO, GENERAL, NO, YES, FULL, NO, NO, NO, ORIGIN_ORIENTED, 0.4, 0.5, ELASTIC, 2000
, 500, 1, 1, \
      -1.75, -1.75, -1.75, -1, 0, 5, 5, 5, 5, \
      -0.2, -0.2, -1, -1, 0, 0, 0, 0, 0
    NO
    YES, C, FEMA, USER, \
      D/DY, YES, NO, 1, 1, 1, NO, 0, 0, , ELASTIC, 0, 2, 4, 6, 2, 4, 6, YES, \
      NO, GENERAL, NO, YES, FULL, NO, NO, NO, ORIGIN_ORIENTED, 0.4, 0.5, ELASTIC, 2000
, 500, 1, 1, \
      -0.006, -0.004, -0.004, -0.001, 0, 0.001, 0.004, 0.004, 0.006, \
      -0.3, -0.3, -1.001, -1, 0, 1, 1.001, 0.3, 0.3
    NO
    YES, IJ, FEMA, USER, YES, \
      D/DY, YES, NO, 1, 1, 1, NO, 0, 0, , 6EI, 0, 2, 4, 6, 2, 4, 6, YES, \
      NO, GENERAL, NO, YES, FULL, NO, NO, NO, ORIGIN_ORIENTED, 0.4, 0.5, ELASTIC, 2000
, 500, 1, 1, \
      -0.012, -0.008, -0.008, -0.001, 0, 0.001, 0.008, 0.008, 0.012, \
      -0.3, -0.3, -1.001, -1, 0, 1, 1.001, 0.3, 0.3, \
      D/DY, YES, NO, 1, 1, 1, NO, 0, 0, , 6EI, 0, 2, 4, 6, 2, 4, 6, YES, \
      NO, GENERAL, NO, YES, FULL, NO, NO, NO, ORIGIN_ORIENTED, 0.4, 0.5, ELASTIC, 2000
, 500, 1, 1, \
      -0.012, -0.008, -0.008, -0.001, 0, 0.001, 0.008, 0.008, 0.012, \
      -0.3, -0.3, -1.001, -1, 0, 1, 1.001, 0.3, 0.3
    NO
    2560, 67, 80
  NAME=Maschi MB, Maschi
    BEAM, , MASONRY, PIER, NONE, NO, 0, 0.5, 0.5, 0.5, 0.5, YES
    0, 0, 0, 1, 0, 0.4, 0, NO, NONE
    YES, C, FEMA, USER, \
      D/DY, NO, NO, 1, 1, 1, NO, 0, 0, , ELASTIC, 0, 2, 4, 6, 2, 4, 6, YES, \
      NO, GENERAL, NO, YES, FULL, NO, NO, NO, ORIGIN_ORIENTED, 0.4, 0.5, ELASTIC, 2000
, 500, 1, 1, \
      -1.75, -1.75, -1.75, -1, 0, 5, 5, 5, 5, \
      -0.2, -0.2, -1, -1, 0, 0, 0, 0, 0
    NO
    YES, C, FEMA, USER, \
      D/DY, YES, NO, 1, 1, 1, NO, 0, 0, , ELASTIC, 0, 2, 4, 6, 2, 4, 6, YES, \
      NO, GENERAL, NO, YES, FULL, NO, NO, NO, ORIGIN_ORIENTED, 0.4, 0.5, ELASTIC, 2000
, 500, 1, 1, \
      -0.006, -0.004, -0.004, -0.001, 0, 0.001, 0.004, 0.004, 0.006, \
      -0.3, -0.3, -1.001, -1, 0, 1, 1.001, 0.3, 0.3
    NO
    YES, IJ, FEMA, USER, YES, \
      D/DY, YES, NO, 1, 1, 1, NO, 0, 0, , 6EI, 0, 2, 4, 6, 2, 4, 6, YES, \
```

```
      NO, GENERAL, NO, YES, FULL, NO, NO, NO, ORIGIN_ORIENTED, 0.4, 0.5, ELASTIC, 2000
, 500, 1, 1, \
      -0.009, -0.006, -0.006, -0.001, 0, 0.001, 0.006, 0.006, 0.009, \
      -0.3, -0.3, -1.001, -1, 0, 1, 1.001, 0.3, 0.3, \
      D/DY, YES, NO, 1, 1, 1, NO, 0, 0, , 6EI, 0, 2, 4, 6, 2, 4, 6, YES, \
      NO, GENERAL, NO, YES, FULL, NO, NO, NO, ORIGIN_ORIENTED, 0.4, 0.5, ELASTIC, 2000
, 500, 1, 1, \
      -0.009, -0.006, -0.006, -0.001, 0, 0.001, 0.006, 0.006, 0.009, \
      -0.3, -0.3, -1.001, -1, 0, 1, 1.001, 0.3, 0.3
    NO
    EXIST, 2962, 222, 0.85
  NAME=Pilastri fitt MB, Pilastri fitt
    BEAM, , MASONRY, PIER, NONE, NO, 0, 0.5, 0.5, 0.5, 0.5, YES
    0, 0, 0, 1, 0, 0.4, 0, NO, NONE
    YES, C, FEMA, USER, \
      D/DY, NO, NO, 1, 1, 1, NO, 0, 0, , ELASTIC, 0, 2, 4, 6, 2, 4, 6, YES, \
      NO, GENERAL, NO, YES, FULL, NO, NO, NO, ORIGIN_ORIENTED, 0.4, 0.5, ELASTIC, 2000
, 500, 1, 1, \
      -1.75, -1.75, -1.75, -1, 0, 5, 5, 5, 5, \
      -0.2, -0.2, -1, -1, 0, 0, 0, 0, 0
    NO
    NO
    NO
    NO
    NO
    EXIST, 2962, 222, 0.85
  NAME=Fasce MB, Fasce
    BEAM, , MASONRY, SPAN, NONE, NO, 0, 0.5, 0.5, 0.5, 0.5, YES
    0, 0, 0, 1, 0, 0.4, 0, NO, NONE
    YES, C, FEMA, USER, \
      D/DY, NO, NO, 1, 1, 1, NO, 0, 0, , ELASTIC, 0, 2, 4, 6, 2, 4, 6, YES, \
      NO, GENERAL, NO, YES, FULL, NO, NO, NO, ORIGIN_ORIENTED, 0.4, 0.5, ELASTIC, 2000
, 500, 1, 1, \
      -1.75, -1.75, -1.75, -1, 0, 5, 5, 5, 5, \
      -0.2, -0.2, -1, -1, 0, 0, 0, 0, 0
    NO
    YES, C, FEMA, USER, \
      D/DY, YES, NO, 1, 1, 1, NO, 0, 0, , ELASTIC, 0, 2, 4, 6, 2, 4, 6, YES, \
      NO, GENERAL, NO, YES, FULL, NO, NO, NO, ORIGIN_ORIENTED, 0.4, 0.5, ELASTIC, 2000
, 500, 1, 1, \
      -0.006, -0.004, -0.004, -0.001, 0, 0.001, 0.004, 0.004, 0.006, \
      -0.3, -0.3, -1.001, -1, 0, 1, 1.001, 0.3, 0.3
    NO
    YES, IJ, FEMA, USER, YES, \
      D/DY, YES, NO, 1, 1, 1, NO, 0, 0, , 6EI, 0, 2, 4, 6, 2, 4, 6, YES, \
      NO, GENERAL, NO, YES, FULL, NO, NO, NO, ORIGIN_ORIENTED, 0.4, 0.5, ELASTIC, 2000
, 500, 1, 1, \
      -0.012, -0.008, -0.008, -0.001, 0, 0.001, 0.008, 0.008, 0.012, \
      -0.3, -0.3, -1.001, -1, 0, 1, 1.001, 0.3, 0.3, \
      D/DY, YES, NO, 1, 1, 1, NO, 0, 0, , 6EI, 0, 2, 4, 6, 2, 4, 6, YES, \
      NO, GENERAL, NO, YES, FULL, NO, NO, NO, ORIGIN_ORIENTED, 0.4, 0.5, ELASTIC, 2000
, 500, 1, 1, \
      -0.012, -0.008, -0.008, -0.001, 0, 0.001, 0.008, 0.008, 0.012, \
      -0.3, -0.3, -1.001, -1, 0, 1, 1.001, 0.3, 0.3
    NO
    2962, 222, 80

*HINGE-ASSIGN    ; Assign Pushover Hinge
; TYPE=TYPE_NAME, ELEM_NO(GLINK_NO), HINGE_TYP, FIBER_KEY  ; 1st line
  TYPE=BEAM, 14, Maschi MA, 0
  TYPE=BEAM, 15, Maschi MA, 0
  TYPE=BEAM, 16, Maschi MA, 0
```

```
  TYPE=BEAM, 6122, Fasce MA, 0
  TYPE=BEAM, 6123, Fasce MA, 0
  TYPE=BEAM, 6127, Pilastri c.a., 0

*PUSHOVER-LOAD   ; Pushover Load Cases
; NAME=NAME, DESC,                                      ; 1st line
; STEP, bUSEINILOAD, bPDELTA, METHOD, bREAC, bDISP  ; 2nd line
; CTRL_OPT, INC_FUNCTION, ANAL_RATIO                    ; 3rd line (METHOD=LOAD)
; CTRL_OPT, DISPL                                       ; 3rd line (METHOD=DISP, CTRL_OPT=
GLOBAL)
; CTRL_OPT, MNODE, DIR, DISPL                           ; 3rd line (METHOD=DISP, CTRL_OPT=
MNODE)
; bANAL_LIMIT, VALUE, LOAD_PATTERN                      ; 4th line
; DIR, SCALE                                            ; 5th line (LOAD_PATTERN=UNIFORM)
; MODE, SCALE                                           ; 5th line (LOAD_PATTERN=MODE)
; LCNAME1, SCALE1, LCNAME2, SCALE2, ...                 ; from 5th line (LOAD_PATTERN=STAT
IC)
   NAME=GU1 +Y,
        200, YES, NO, DISP, YES, NO, NO, 20
        MNODE, 192, DY, 0.03
        NO, 10, STATIC, YES, NO, NO, 10, 10
        SISMA Y, 1
   NAME=GU1 -Y,
        200, YES, NO, DISP, YES, NO, NO, 20
        MNODE, 192, DY, -0.03
        NO, 10, STATIC, YES, NO, NO, 10, 10
        SISMA Y, -1
   NAME=GU2 +Y,
        200, YES, NO, DISP, YES, NO, NO, 20
        MNODE, 192, DY, 0.035
        NO, 10, UNIFORM, YES, NO, NO, 10, 10
        DY, 1
   NAME=GU2 -Y,
        200, YES, NO, DISP, YES, NO, NO, 20
        MNODE, 192, DY, -0.035
        NO, 10, UNIFORM, YES, NO, NO, 10, 10
        DY, -1

*LOADCOMB    ; Combinations
; NAME=NAME, KIND, ACTIVE, bES, iTYPE, DESC, iSERV-TYPE, nLCOMTYPE   ; line 1
;      ANAL1, LCNAME1, FACT1, ...                                     ; from line 2
   NAME=SISMA V, CONC, STRENGTH, 0, 0, , 0, 0
        ST, PP, 1, ST, G1+G2 copertura A, 3.7, ST, G1+G2 copertura B, 1.5
        ST, Q sottotetto, 0.3, ST, sporto gronda, 2, ST, travi, 3
        ST, parapetto, 1.5, ST, muro, 4.6
   NAME=sisma_1, CONC, STRENGTH, 0, 0, , 0, 0
        RS, sisma_x, 1, RS, sisma_y, 0.3, ES, sisma_x, 1, ES, sisma_y, 0.3
        CBC, SISMA V, 1
   NAME=sisma_2, CONC, STRENGTH, 0, 0, , 0, 0
        RS, sisma_x, 1, RS, sisma_y, 0.3, ES, sisma_x, 1, ES, sisma_y, -0.3
        CBC, SISMA V, 1
   NAME=sisma_3, CONC, STRENGTH, 0, 0, , 0, 0
        RS, sisma_x, 1, RS, sisma_y, 0.3, ES, sisma_x, -1, ES, sisma_y, 0.3
        CBC, SISMA V, 1
   NAME=sisma_4, CONC, STRENGTH, 0, 0, , 0, 0
        RS, sisma_x, 1, RS, sisma_y, 0.3, ES, sisma_x, -1, ES, sisma_y, -0.3
        CBC, SISMA V, 1
   NAME=sisma_5, CONC, STRENGTH, 0, 0, , 0, 0
        RS, sisma_x, 1, RS, sisma_y, -0.3, ES, sisma_x, 1, ES, sisma_y, 0.3
        CBC, SISMA V, 1
   NAME=sisma_6, CONC, STRENGTH, 0, 0, , 0, 0
        RS, sisma_x, 1, RS, sisma_y, -0.3, ES, sisma_x, 1, ES, sisma_y, -0.3
```

```
     CBC, SISMA V, 1
NAME=sisma_7, CONC, STRENGTH, 0, 0, , 0, 0
     RS, sisma_x, 1, RS, sisma_y, -0.3, ES, sisma_x, -1, ES, sisma_y, 0.3
     CBC, SISMA V, 1
NAME=sisma_8, CONC, STRENGTH, 0, 0, , 0, 0
     RS, sisma_x, 1, RS, sisma_y, -0.3, ES, sisma_x, -1, ES, sisma_y, -0.3
     CBC, SISMA V, 1
NAME=sisma_9, CONC, STRENGTH, 0, 0, , 0, 0
     RS, sisma_x, -1, RS, sisma_y, 0.3, ES, sisma_x, 1, ES, sisma_y, 0.3
     CBC, SISMA V, 1
NAME=sisma_10, CONC, STRENGTH, 0, 0, , 0, 0
     RS, sisma_x, -1, RS, sisma_y, 0.3, ES, sisma_x, 1, ES, sisma_y, -0.3
     CBC, SISMA V, 1
NAME=sisma_11, CONC, STRENGTH, 0, 0, , 0, 0
     RS, sisma_x, -1, RS, sisma_y, 0.3, ES, sisma_x, -1, ES, sisma_y, 0.3
     CBC, SISMA V, 1
NAME=sisma_12, CONC, STRENGTH, 0, 0, , 0, 0
     RS, sisma_x, -1, RS, sisma_y, 0.3, ES, sisma_x, -1, ES, sisma_y, -0.3
     CBC, SISMA V, 1
NAME=sisma_13, CONC, STRENGTH, 0, 0, , 0, 0
     RS, sisma_x, -1, RS, sisma_y, -0.3, ES, sisma_x, 1, ES, sisma_y, 0.3
     CBC, SISMA V, 1
NAME=sisma_14, CONC, STRENGTH, 0, 0, , 0, 0
     RS, sisma_x, -1, RS, sisma_y, -0.3, ES, sisma_x, 1, ES, sisma_y, -0.3
     CBC, SISMA V, 1
NAME=sisma_15, CONC, STRENGTH, 0, 0, , 0, 0
     RS, sisma_x, -1, RS, sisma_y, -0.3, ES, sisma_x, -1, ES, sisma_y, 0.3
     CBC, SISMA V, 1
NAME=sisma_16, CONC, STRENGTH, 0, 0, , 0, 0
     RS, sisma_x, -1, RS, sisma_y, -0.3, ES, sisma_x, -1, ES, sisma_y, -0.3
     CBC, SISMA V, 1
NAME=sisma_17, CONC, STRENGTH, 0, 0, , 0, 0
     RS, sisma_x, 0.3, RS, sisma_y, 1, ES, sisma_x, 0.3, ES, sisma_y, 1
     CBC, SISMA V, 1
NAME=sisma 18, CONC, STRENGTH, 0, 0, , 0, 0
     RS, sisma_x, 0.3, RS, sisma_y, 1, ES, sisma_x, -0.3, ES, sisma_y, 1
     CBC, SISMA V, 1
NAME=sisma_19, CONC, STRENGTH, 0, 0, , 0, 0
     RS, sisma_x, 0.3, RS, sisma_y, 1, ES, sisma_x, 0.3, ES, sisma_y, -1
     CBC, SISMA V, 1
NAME=sisma 20, CONC, STRENGTH, 0, 0, , 0, 0
     RS, sisma_x, 0.3, RS, sisma_y, 1, ES, sisma_x, -0.3, ES, sisma_y, -1
     CBC, SISMA V, 1
NAME=sisma_21, CONC, STRENGTH, 0, 0, , 0, 0
     RS, sisma_x, -0.3, RS, sisma_y, 1, ES, sisma_x, 0.3, ES, sisma_y, 1
     CBC, SISMA V, 1
NAME=sisma_22, CONC, STRENGTH, 0, 0, , 0, 0
     RS, sisma_x, -0.3, RS, sisma_y, 1, ES, sisma_x, -0.3, ES, sisma_y, 1
     CBC, SISMA V, 1
NAME=sisma_23, CONC, STRENGTH, 0, 0, , 0, 0
     RS, sisma_x, -0.3, RS, sisma_y, 1, ES, sisma_x, 0.3, ES, sisma_y, -1
     CBC, SISMA V, 1
NAME=sisma_24, CONC, STRENGTH, 0, 0, , 0, 0
     RS, sisma_x, -0.3, RS, sisma_y, 1, ES, sisma_x, -0.3, ES, sisma_y, -1
     CBC, SISMA V, 1
NAME=sisma_25, CONC, STRENGTH, 0, 0, , 0, 0
     RS, sisma_x, 0.3, RS, sisma_y, -1, ES, sisma_x, 0.3, ES, sisma_y, 1
     CBC, SISMA V, 1
NAME=sisma_26, CONC, STRENGTH, 0, 0, , 0, 0
     RS, sisma_x, 0.3, RS, sisma_y, -1, ES, sisma_x, -0.3, ES, sisma_y, 1
     CBC, SISMA V, 1
NAME=sisma_27, CONC, STRENGTH, 0, 0, , 0, 0
```

```
        RS, sisma_x, 0.3, RS, sisma_y, -1, ES, sisma_x, 0.3, ES, sisma_y, -1
        CBC, SISMA V, 1
   NAME=sisma_28, CONC, STRENGTH, 0, 0, , 0, 0
        RS, sisma_x, 0.3, RS, sisma_y, -1, ES, sisma_x, -0.3, ES, sisma_y, -1
        CBC, SISMA V, 1
   NAME=sisma_29, CONC, STRENGTH, 0, 0, , 0, 0
        RS, sisma_x, -0.3, RS, sisma_y, -1, ES, sisma_x, 0.3, ES, sisma_y, 1
        CBC, SISMA V, 1
   NAME=sisma_30, CONC, STRENGTH, 0, 0, , 0, 0
        RS, sisma_x, -0.3, RS, sisma_y, -1, ES, sisma_x, -0.3, ES, sisma_y, 1
        CBC, SISMA V, 1
   NAME=sisma_31, CONC, STRENGTH, 0, 0, , 0, 0
        RS, sisma_x, -0.3, RS, sisma_y, -1, ES, sisma_x, 0.3, ES, sisma_y, -1
        CBC, SISMA V, 1
   NAME=sisma_32, CONC, STRENGTH, 0, 0, , 0, 0
        RS, sisma_x, -0.3, RS, sisma_y, -1, ES, sisma_x, -0.3, ES, sisma_y, -1
        CBC, SISMA V, 1
   NAME=ENVELOPE, CONC, SPECIAL, 0, 1, , 0, 0
        CBC, sisma_1, 1, CBC, sisma_2, 1, CBC, sisma_3, 1, CBC, sisma_4, 1
        CBC, sisma_5, 1, CBC, sisma_6, 1, CBC, sisma_7, 1, CBC, sisma_8, 1
        CBC, sisma_9, 1, CBC, sisma_10, 1, CBC, sisma_11, 1, CBC, sisma_12, 1
        CBC, sisma_13, 1, CBC, sisma_14, 1, CBC, sisma_15, 1, CBC, sisma_16, 1
        CBC, sisma_17, 1, CBC, sisma_18, 1, CBC, sisma_19, 1, CBC, sisma_20, 1
        CBC, sisma_21, 1, CBC, sisma_22, 1, CBC, sisma_23, 1, CBC, sisma_24, 1
        CBC, sisma_25, 1, CBC, sisma_26, 1, CBC, sisma_27, 1, CBC, sisma_28, 1
        CBC, sisma_29, 1, CBC, sisma_30, 1, CBC, sisma_31, 1, CBC, sisma_32, 1
   NAME=SLU, CONC, INACTIVE, 0, 0, , 0, 0
        ST, PP, 1.3, ST, G1+G2 copertura A, 4.81, ST, G1+G2 copertura B, 1.95
        ST, Q sottotetto, 0.75, ST, sporto gronda, 2.6, ST, Q neve, 1.86
        ST, travi, 3.9, ST, parapetto, 2.25, ST, muro, 5.98

*LC-COLOR    ; Diagram Color for Load Case
; ANAL, LCNAME, iR1(ALL), iG1(ALL), iB1(ALL), iR2(MIN), iG2(MIN), iB2(MIN), iR3(MAX),
iG2(MAX), iB2(MAX)
 ST, parapetto, 0, 128, 57, 192, 0, 128, 192, 0, 128
 ST, PP, 78, 0, 255, 255, 160, 255, 163, 255, 160
 PO, GU1 +Y, 192, 0, 128, 255, 0, 192, 255, 160, 255
 CBC, SISMA V, 212, 160, 255, 148, 87, 255, 148, 87, 255
 CBC, sisma_1, 160, 192, 255, 255, 192, 160, 0, 128, 192
 PO, GU1 -Y, 0, 157, 192, 255, 160, 255, 93, 255, 87
 CBC, sisma_2, 255, 255, 87, 192, 0, 128, 255, 87, 128
 RS, sisma_x, 0, 128, 57, 192, 128, 0, 163, 255, 160
 ES, sisma_x, 0, 157, 192, 78, 0, 255, 163, 255, 160
 RS, sisma_y, 192, 0, 128, 163, 160, 255, 163, 255, 160
 ES, sisma_y, 192, 72, 0, 255, 87, 128, 210, 210, 210
 CBC, sisma_3, 0, 128, 57, 192, 72, 0, 192, 0, 128
 CBC, sisma_4, 160, 255, 255, 255, 160, 255, 163, 255, 160
 CBC, sisma_5, 0, 128, 192, 0, 192, 192, 163, 160, 255
 CBC, sisma_6, 255, 192, 87, 192, 128, 0, 255, 128, 0
 CBC, sisma_7, 0, 192, 192, 255, 0, 192, 255, 128, 0
 CBC, sisma_8, 146, 0, 255, 0, 128, 255, 255, 192, 87
 CBC, sisma_9, 78, 0, 255, 0, 192, 128, 128, 192, 0
 CBC, sisma_10, 192, 72, 0, 192, 128, 0, 255, 128, 0
 CBC, sisma_11, 255, 192, 160, 192, 0, 192, 0, 128, 57
 CBC, sisma_12, 192, 0, 128, 146, 0, 255, 255, 255, 255
 CBC, sisma_13, 255, 0, 128, 78, 0, 255, 212, 160, 255
 CBC, sisma_14, 255, 87, 87, 85, 192, 0, 146, 0, 255
 CBC, sisma_15, 0, 128, 128, 255, 160, 255, 255, 128, 0
 CBC, sisma_16, 163, 255, 160, 0, 128, 57, 160, 192, 255
 CBC, sisma_17, 192, 0, 192, 160, 192, 255, 192, 72, 0
 CBC, sisma_18, 148, 87, 255, 192, 0, 192, 255, 160, 255
 CBC, sisma_19, 0, 128, 192, 212, 160, 255, 0, 128, 128
```

```
 CBC, sisma_20, 192, 192, 0, 192, 0, 128, 78, 0, 255
 CBC, sisma_21, 0, 192, 128, 0, 128, 128, 255, 255, 87
 CBC, sisma_22, 78, 0, 255, 192, 128, 0, 192, 128, 0
 CBC, sisma_23, 255, 0, 128, 255, 128, 0, 0, 128, 57
 CBC, sisma_24, 192, 72, 0, 210, 210, 210, 163, 255, 160
 CBC, sisma_25, 192, 192, 0, 148, 87, 255, 0, 128, 255
 CBC, sisma_26, 146, 0, 255, 192, 0, 128, 0, 192, 128
 CBC, sisma_27, 163, 255, 160, 255, 255, 255, 78, 0, 255
 CBC, sisma_28, 148, 87, 255, 255, 255, 255, 85, 0, 192
 CBC, sisma_29, 255, 160, 255, 255, 192, 87, 85, 192, 0
 CBC, sisma_30, 192, 192, 192, 192, 192, 0, 192, 0, 192
 CBC, sisma_31, 85, 0, 192, 85, 0, 192, 255, 160, 255
 CBC, sisma_32, 78, 0, 255, 0, 128, 128, 128, 192, 0
 CBC, ENVELOPE, 163, 160, 255, 192, 192, 192, 160, 192, 255
 CBC, SLU, 163, 255, 160, 255, 255, 255, 192, 72, 0
 ST, G1+G2 copertura A, 163, 255, 160, 255, 255, 255, 255, 255, 87
 PO, GU2 +Y, 146, 0, 255, 85, 192, 0, 255, 192, 160
 ST, G1+G2 copertura B, 148, 87, 255, 192, 128, 0, 255, 255, 255
 PO, GU2 -Y, 255, 192, 160, 0, 128, 128, 255, 0, 192
 ST, muro, 163, 255, 160, 255, 192, 160, 85, 0, 192
 ST, Q sottotetto, 255, 192, 87, 255, 87, 87, 192, 0, 192
 ST, sporto gronda, 0, 192, 128, 146, 0, 255, 148, 87, 255
 ST, Q neve, 128, 192, 0, 255, 192, 87, 192, 72, 0
 ST, SISMA X, 255, 255, 87, 192, 128, 0, 192, 192, 0
 ST, SISMA Y, 255, 87, 87, 163, 255, 160, 0, 128, 57
 ST, travi, 160, 255, 255, 85, 192, 0, 160, 192, 255

*EIGEN-CTRL    ; Eigenvalue Analysis Control
; TYPE, iFREQ, iITER, iDIM, TOL, bMINMAX, FRMIN, FRMAX, bSTRUM   ; TYPE=EIGEN
; TYPE, bINCNL, iGNUM                                            ; TYPE=RITZ(line 1)
;       KIND1, CASE1/GROUND1, iNOG1, ...                         ; TYPE=RITZ(from line
2)
   LANCZOS, 25, 20, 1, 1e-010, NO, 0, 0, NO

*DGN-MATL    ; Modify Steel(Concrete) Material
; iMAT, TYPE, MNAME, [DATA1]                                    ; STEEL
; iMAT, TYPE, MNAME, [DATA2], [R-DATA], FCI, bSERV, SHORT, LONG ; CONC
; iMAT, TYPE, MNAME, [DATA3], [DATA2], [R-DATA]                 ; SRC
; iMAT, TYPE, MNAME, [DATA5]                                    ; STEEL(None) & KSCE-A
SD05
; [DATA1] : 1, DB, CODE, NAME or 2, ELAST, POISN, FU, FY1, FY2, FY3, FY4
;           FY5, FY6, AFT, AFT2, AFT3, FY, AFV, AFV2, AFV3
; [DATA2] : 1, DB, CODE, NAME or 2, FC, CHK, LAMBDA
; [DATA3] : 1, DB, CODE, NAME or 2, ELAST, FU, FY1, FY2, FY3, FY4
;              FY5, FY6, AFT, AFT2, AFT3, FY, AFV, AFV2, AFV3
; [DATA4] : 1, DB, CODE, NAME or 2, FC
; [DATA5] : 3, ELAST, POISN, AL1, AL2, AL3, AL4, AL5, AL6, AL7, AL8, AL9, AL10
;              MIN1, MIN2, MIN3
; [R-DATA]: RBCODE, RBMAIN, RBSUB, FY(R), FYS
    6, CONC , C16/20            , 1, EN04(RC)   ,            ,C16/20        , NO, 1, ,
 , , 0, 0, 11200, NO, 0, 0,            ,            ,              , 0, NO, 1, , , , 0
, 0, 0
    7, CONC , C25/30            , 1, EN04(RC)   ,            ,C25/30        , NO, 1, U
NI(RC), B450C, B450C, , , 17500, NO, 0, 0,            ,            ,              , 0,
 NO, 1, , , , 0, 0, 0

*ENDDATA
```

**PROJECT TITLE :**

| | Company | | Client | |
|---|---|---|---|---|
| MIDAS | Author | Nicola | File Name | allin - scuola muscoline - PE - PO - 00.txt |

```
 ** midas Gen Pushover Curve Data **
_____________________________________________

[ Target Displacement ]
* Disp. Control Node : 192
* Direction : DY
* Load Pattern Type : Accerelation
* SLO- Demand, Capacity, Step, Remark : 0.009766, 0.015125, 43, OK
* SLD- Demand, Capacity, Step, Remark : 0.009766, 0.022575, 43, OK
* SLV- Demand, Capacity, Step, Remark : 0.009766, -, 43, -
* SLC- Demand, Capacity, Step, Remark : 0.009766, -, 43, -
_____________________________________________

- Target Displacement of SLO
  m* = 23.6114
  Gamma = 1
  Fy* = 107.512
  T* = 0.216703
  Se(T*) = 0.648g
  det* = 0.00755854
  qu = 1.39551
  Tc = 0.44
  dt* = 0.00976591 (short period range)
  dt = 0.00976591

- Target Displacement of SLD
  m* = 23.6114
  Gamma = 1
  Fy* = 107.512
  T* = 0.216703
  Se(T*) = 0.648g
  det* = 0.00755854
  qu = 1.39551
  Tc = 0.44
  dt* = 0.00976591 (short period range)
  dt = 0.00976591

- Target Displacement of SLV
  m* = 23.6114
  Gamma = 1
  Fy* = 107.512
  T* = 0.216703
  Se(T*) = 0.648g
  det* = 0.00755854
  qu = 1.39551
  Tc = 0.44
  dt* = 0.00976591 (short period range)
  dt = 0.00976591

- Target Displacement of SLC
  m* = 23.6114
  Gamma = 1
  Fy* = 107.512
  T* = 0.216703
  Se(T*) = 0.648g
  det* = 0.00755854
  qu = 1.39551
  Tc = 0.44
  dt* = 0.00976591 (short period range)
  dt = 0.00976591
_____________________________________________

[ Spectral Displacement(Sd) vs. Spectral Acceleration(Sa) ]

Load Case :GU2 +Y   Unit:  kN,m


 Node : 192   Direction : DY   Mode 1
```

**PROJECT TITLE :**

| | | | | |
|---|---|---|---|---|
| MIDAS | Company | | Client | |
| | Author | Nicola | File Name | allin - scuola muscoline - PE - PO - 00.txt |

| Step<br>Status of Step | Spectral Displacement(Sd) | Spectral Acceleration(Sa) |
|---|---|---|
| 0 | 1.75000e-005 | 1.65741e-003 |
| 1 | 1.75000e-004 | 1.65741e-002 |
| 2 | 3.50000e-004 | 3.31482e-002 |
| 3 | 5.25000e-004 | 4.97223e-002 |
| 4 | 7.00000e-004 | 6.62963e-002 |
| 5 | 8.75000e-004 | 8.28704e-002 |
| 6 | 1.05000e-003 | 9.94445e-002 |
| 7 | 1.22500e-003 | 1.16019e-001 |
| 8 | 1.40000e-003 | 1.32593e-001 |
| 9 | 1.57500e-003 | 1.48696e-001 |
| 10 | 1.75000e-003 | 1.62585e-001 |
| 11 | 1.92500e-003 | 1.76474e-001 |
| 12 | 2.10000e-003 | 1.90364e-001 |
| 13 | 2.27500e-003 | 2.04253e-001 |
| 14 | 2.45000e-003 | 2.18142e-001 |
| 15 | 2.62500e-003 | 2.32031e-001 |
| 16 | 2.80000e-003 | 2.45921e-001 |
| 17 | 2.97500e-003 | 2.59810e-001 |
| 18 | 3.15000e-003 | 2.73699e-001 |
| 19 | 3.32500e-003 | 2.86926e-001 |
| 20 | 3.50000e-003 | 2.99029e-001 |
| 21 | 3.67500e-003 | 3.11132e-001 |
| 22 | 3.85000e-003 | 3.23234e-001 |
| 23 | 4.02500e-003 | 3.35337e-001 |
| 24 | 4.20000e-003 | 3.47440e-001 |
| 25 | 4.37500e-003 | 3.59542e-001 |
| 26 | 4.55000e-003 | 3.71645e-001 |
| 27 | 4.72500e-003 | 3.83747e-001 |
| 28 | 4.90000e-003 | 3.95850e-001 |
| 29 | 5.07500e-003 | 4.07952e-001 |
| 30 | 5.25000e-003 | 4.20055e-001 |
| 31 | 5.42500e-003 | 4.31174e-001 |

| | | | |
|---|---|---|---|
| 32 | 5.60000e-003 | 4.42186e-001 | |
| 33 | 5.77500e-003 | 4.52745e-001 | |
| 34 | 5.95000e-003 | 4.63303e-001 | |
| 35 | 6.12500e-003 | 4.73862e-001 | |
| 36 | 6.30000e-003 | 4.80520e-001 | |
| 37 | 6.47500e-003 | 4.80636e-001 | |
| 38 | 6.65000e-003 | 4.80751e-001 | |
| 39 | 6.82500e-003 | 4.80866e-001 | |
| 40 | 7.00000e-003 | 4.80981e-001 | |
| 41 | 7.17500e-003 | 4.81096e-001 | |
| 42 | 7.35000e-003 | 4.81211e-001 | |
| 43 | 7.52500e-003 | 4.81326e-001 | SLO(Dem.)SLD(Dem.)SLV(Dem.)SLC(Dem.) |
| 44 | 7.70000e-003 | 4.81441e-001 | |
| 45 | 7.87500e-003 | 4.81557e-001 | |
| 46 | 8.05000e-003 | 4.81672e-001 | |
| 47 | 8.22500e-003 | 4.81787e-001 | |
| 48 | 8.40000e-003 | 4.81902e-001 | |
| 49 | 8.57500e-003 | 4.82017e-001 | |
| 50 | 8.75000e-003 | 4.82132e-001 | |
| 51 | 8.92500e-003 | 4.82247e-001 | |
| 52 | 9.10000e-003 | 4.82362e-001 | |
| 53 | 9.27500e-003 | 4.82477e-001 | |
| 54 | 9.45000e-003 | 4.82592e-001 | |
| 55 | 9.62500e-003 | 4.82708e-001 | |
| 56 | 9.80000e-003 | 4.82823e-001 | |
| 57 | 9.97500e-003 | 4.82938e-001 | |
| 58 | 1.01500e-002 | 4.83053e-001 | |
| 59 | 1.03250e-002 | 4.83168e-001 | |
| 60 | 1.05000e-002 | 4.83283e-001 | |
| 61 | 1.06750e-002 | 4.83398e-001 | |
| 62 | 1.08500e-002 | 4.83513e-001 | |
| 63 | 1.10250e-002 | 4.83628e-001 | |
| 64 | 1.12000e-002 | 4.83744e-001 | |
| 65 | 1.13750e-002 | 4.83859e-001 | |
| 66 | 1.15500e-002 | 4.83974e-001 | |

**PROJECT TITLE :**

| | | | | |
|---|---|---|---|---|
| MIDAS | Company | | Client | |
| | Author | Nicola | File Name | allin - scuola muscoline - PE - PO - 00.txt |

| | | |
|---|---|---|
| 67 | 1.17250e-002 | 4.84089e-001 |
| 68 | 1.19000e-002 | 4.84204e-001 |
| 69 | 1.20750e-002 | 4.84319e-001 |
| 70 | 1.22500e-002 | 4.84434e-001 |
| 71 | 1.24250e-002 | 4.84549e-001 |
| 72 | 1.26000e-002 | 4.84664e-001 |
| 73 | 1.27750e-002 | 4.84779e-001 |
| 74 | 1.29500e-002 | 4.84895e-001 |
| 75 | 1.31250e-002 | 4.85010e-001 |
| 76 | 1.33000e-002 | 4.85125e-001 |
| 77 | 1.34750e-002 | 4.85240e-001 |
| 78 | 1.36500e-002 | 4.85355e-001 |
| 79 | 1.38250e-002 | 4.85470e-001 |
| 80 | 1.40000e-002 | 4.85585e-001 |
| 81 | 1.41750e-002 | 4.85700e-001 |
| 82 | 1.43500e-002 | 4.85815e-001 |
| 83 | 1.45250e-002 | 4.85930e-001 |
| 84 | 1.47000e-002 | 4.86046e-001 |
| 85 | 1.48750e-002 | 4.86161e-001 |
| 86 | 1.50500e-002 | 4.86276e-001 |
| 87 | 1.52250e-002 | 4.86391e-001 |
| 88 | 1.54000e-002 | 4.86506e-001 |
| 89 | 1.55750e-002 | 4.86621e-001 |
| 90 | 1.57500e-002 | 4.86736e-001 |
| 91 | 1.59250e-002 | 4.86851e-001 |
| 92 | 1.61000e-002 | 4.86966e-001 |
| 93 | 1.62750e-002 | 4.87081e-001 |
| 94 | 1.64500e-002 | 4.87197e-001 |
| 95 | 1.66250e-002 | 4.87312e-001 |
| 96 | 1.68000e-002 | 4.87427e-001 |
| 97 | 1.69750e-002 | 4.87542e-001 |
| 98 | 1.71500e-002 | 4.87657e-001 |
| 99 | 1.73250e-002 | 4.87772e-001 |
| 100 | 1.75000e-002 | 4.87887e-001 |

| | | |
|---|---|---|
| 101 | 1.76750e-002 | 4.88002e-001 |
| 102 | 1.78500e-002 | 4.88117e-001 |
| 103 | 1.80250e-002 | 4.88232e-001 |
| 104 | 1.82000e-002 | 4.88348e-001 |
| 105 | 1.83750e-002 | 4.88463e-001 |
| 106 | 1.85500e-002 | 4.88578e-001 |
| 107 | 1.87250e-002 | 4.88693e-001 |
| 108 | 1.89000e-002 | 4.88808e-001 |
| 109 | 1.90750e-002 | 4.88923e-001 |
| 110 | 1.92500e-002 | 4.89038e-001 |
| 111 | 1.94250e-002 | 4.89153e-001 |
| 112 | 1.96000e-002 | 4.89268e-001 |
| 113 | 1.97750e-002 | 4.89383e-001 |
| 114 | 1.99500e-002 | 4.89499e-001 |
| 115 | 2.01250e-002 | 4.89614e-001 |
| 116 | 2.03000e-002 | 4.89729e-001 |
| 117 | 2.04750e-002 | 4.89844e-001 |
| 118 | 2.06500e-002 | 4.89959e-001 |
| 119 | 2.08250e-002 | 4.90074e-001 |
| 120 | 2.10000e-002 | 4.90189e-001 |
| 121 | 2.11750e-002 | 4.90304e-001 |
| 122 | 2.13500e-002 | 4.90419e-001 |
| 123 | 2.15250e-002 | 4.90534e-001 |
| 124 | 2.17000e-002 | 4.90649e-001 |
| 125 | 2.18750e-002 | 4.90765e-001 |
| 126 | 2.20500e-002 | 4.90880e-001 |
| 127 | 2.22250e-002 | 4.90995e-001 |
| 128 | 2.24000e-002 | 4.91110e-001 |
| 129 | 2.25750e-002 | 4.91225e-001 |
| SLD(Cap.) | | |
| 130 | 2.27500e-002 | 4.71246e-001 |
| 131 | 2.29250e-002 | 4.71716e-001 |
| 132 | 2.31000e-002 | 4.72122e-001 |
| 133 | 2.32750e-002 | 4.34424e-001 |
| 134 | 2.34500e-002 | 4.34715e-001 |
| 135 | 2.36250e-002 | 4.35005e-001 |

**PROJECT TITLE :**

| | | | | |
|---|---|---|---|---|
| MIDAS | Company | | Client | |
| | Author | Nicola | File Name | allin - scuola muscoline - PE - PO - 00.txt |

| | | |
|---|---|---|
| 136 | 2.38000e-002 | 4.35296e-001 |
| 137 | 2.39750e-002 | 4.35566e-001 |
| 138 | 2.41500e-002 | 4.35797e-001 |
| 139 | 2.43250e-002 | 4.36028e-001 |
| 140 | 2.45000e-002 | 4.36259e-001 |
| 141 | 2.46750e-002 | 4.36490e-001 |
| 142 | 2.48500e-002 | 4.36721e-001 |
| 143 | 2.50250e-002 | 4.36952e-001 |
| 144 | 2.52000e-002 | 4.37182e-001 |
| 145 | 2.53750e-002 | 4.37413e-001 |
| 146 | 2.55500e-002 | 4.37616e-001 |
| 147 | 2.57250e-002 | 4.37731e-001 |
| 148 | 2.59000e-002 | 4.37845e-001 |
| 149 | 2.60750e-002 | 4.37960e-001 |
| 150 | 2.62500e-002 | 4.38074e-001 |
| 151 | 2.64250e-002 | 4.38188e-001 |
| 152 | 2.66000e-002 | 4.38303e-001 |
| 153 | 2.67750e-002 | 4.38417e-001 |
| 154 | 2.69500e-002 | 4.38532e-001 |
| 155 | 2.71250e-002 | 4.38646e-001 |
| 156 | 2.73000e-002 | 4.38760e-001 |
| 157 | 2.74750e-002 | 4.38875e-001 |
| 158 | 2.76500e-002 | 4.38989e-001 |
| 159 | 2.78250e-002 | 4.39104e-001 |
| 160 | 2.80000e-002 | 4.39218e-001 |
| 161 | 2.81750e-002 | 4.39332e-001 |
| 162 | 2.83500e-002 | 4.39447e-001 |
| 163 | 2.85250e-002 | 4.39561e-001 |
| 164 | 2.87000e-002 | 4.39676e-001 |
| 165 | 2.88750e-002 | 4.39790e-001 |
| 166 | 2.90500e-002 | 4.39904e-001 |
| 167 | 2.92250e-002 | 4.40019e-001 |
| 168 | 2.94000e-002 | 4.40133e-001 |
| 169 | 2.95750e-002 | 4.40248e-001 |

**PROJECT TITLE :**

| | Company | | Client | |
|---|---|---|---|---|
| MIDAS | Author | Nicola | File Name | allin - scuola muscoline - PE - PO - 00.txt |

| | | |
|---|---|---|
| 170 | 2.97500e-002 | 4.40362e-001 |
| 171 | 2.99250e-002 | 4.40476e-001 |
| 172 | 3.01000e-002 | 4.40591e-001 |
| 173 | 3.02750e-002 | 4.40705e-001 |
| 174 | 3.04500e-002 | 4.40820e-001 |
| 175 | 3.06250e-002 | 4.28780e-001 |
| 176 | 3.08000e-002 | 4.28957e-001 |
| 177 | 3.09750e-002 | 4.29119e-001 |
| 178 | 3.11500e-002 | 4.29281e-001 |
| 179 | 3.13250e-002 | 4.29443e-001 |
| 180 | 3.15000e-002 | 4.29605e-001 |
| 181 | 3.16750e-002 | 4.29767e-001 |
| 182 | 3.18500e-002 | 4.29928e-001 |
| 183 | 3.20250e-002 | 4.30065e-001 |
| 184 | 3.22000e-002 | 4.30180e-001 |
| 185 | 3.23750e-002 | 4.30294e-001 |
| 186 | 3.25500e-002 | 4.30408e-001 |
| 187 | 3.27250e-002 | 4.30523e-001 |
| 188 | 3.29000e-002 | 4.30637e-001 |
| 189 | 3.30750e-002 | 4.30751e-001 |
| 190 | 3.32500e-002 | 4.30865e-001 |
| 191 | 3.34250e-002 | 4.30980e-001 |
| 192 | 3.36000e-002 | 4.31094e-001 |
| 193 | 3.37750e-002 | 4.31208e-001 |
| 194 | 3.39500e-002 | 4.31322e-001 |
| 195 | 3.41250e-002 | 4.31437e-001 |
| 196 | 3.43000e-002 | 4.31551e-001 |
| 197 | 3.44750e-002 | 4.31665e-001 |
| 198 | 3.46500e-002 | 4.31780e-001 |
| 199 | 3.48250e-002 | 4.31894e-001 |
| 200 | 3.50000e-002 | 4.32008e-001 |

| | | |
|---|---|---|
| Min : | 1.75000e-005 | 1.65741e-003 |
| Max : | 2.25750e-002 | 4.91225e-001 |

**PROJECT TITLE :**

| | Company | | Client | |
|---|---|---|---|---|
| MIDAS | Author | Nicola | File Name | allin - scuola muscoline - PE - PO - 00.txt |

```
 ** midas Gen Pushover Curve Data **
_____________________________________________

[ Target Displacement ]
* Disp. Control Node : 192
* Direction : DY
* Load Pattern Type : Accerelation
* SLO- Demand, Capacity, Step, Remark : 0.009842, 0.014891, 44, OK
* SLD- Demand, Capacity, Step, Remark : 0.009842, 0.022225, 44, OK
* SLV- Demand, Capacity, Step, Remark : 0.009842, -, 44, -
* SLC- Demand, Capacity, Step, Remark : 0.009842, -, 44, -
_____________________________________________

- Target Displacement of SLO
  m* = 23.6114
  Gamma = 1
  Fy* = 108.063
  T* = 0.218193
  Se(T*) = 0.648g
  det* = 0.0076628
  qu = 1.38839
  Tc = 0.44
  dt* = 0.00984191 (short period range)
  dt = 0.00984191

- Target Displacement of SLD
  m* = 23.6114
  Gamma = 1
  Fy* = 108.063
  T* = 0.218193
  Se(T*) = 0.648g
  det* = 0.0076628
  qu = 1.38839
  Tc = 0.44
  dt* = 0.00984191 (short period range)
  dt = 0.00984191

- Target Displacement of SLV
  m* = 23.6114
  Gamma = 1
  Fy* = 108.063
  T* = 0.218193
  Se(T*) = 0.648g
  det* = 0.0076628
  qu = 1.38839
  Tc = 0.44
  dt* = 0.00984191 (short period range)
  dt = 0.00984191

- Target Displacement of SLC
  m* = 23.6114
  Gamma = 1
  Fy* = 108.063
  T* = 0.218193
  Se(T*) = 0.648g
  det* = 0.0076628
  qu = 1.38839
  Tc = 0.44
  dt* = 0.00984191 (short period range)
  dt = 0.00984191
_____________________________________________

[ Spectral Displacement(Sd) vs. Spectral Acceleration(Sa) ]

Load Case :GU2 -Y   Unit:  kN,m


 Node : 192   Direction : DY   Mode 1
```

**PROJECT TITLE :**

| | | | | |
|---|---|---|---|---|
| MIDAS | Company | | Client | |
| | Author | Nicola | File Name | allin - scuola muscoline - PE - PO - 00.txt |

| Step<br>Status of Step | Spectral Displacement(Sd) | Spectral Acceleration(Sa) |
|---|---|---|
| 0 | 1.75000e-005 | 1.65741e-003 |
| 1 | 1.75000e-004 | 1.65741e-002 |
| 2 | 3.50000e-004 | 3.31482e-002 |
| 3 | 5.25000e-004 | 4.97223e-002 |
| 4 | 7.00000e-004 | 6.62963e-002 |
| 5 | 8.75000e-004 | 8.28704e-002 |
| 6 | 1.05000e-003 | 9.94445e-002 |
| 7 | 1.22500e-003 | 1.16019e-001 |
| 8 | 1.40000e-003 | 1.32593e-001 |
| 9 | 1.57500e-003 | 1.49167e-001 |
| 10 | 1.75000e-003 | 1.64075e-001 |
| 11 | 1.92500e-003 | 1.77964e-001 |
| 12 | 2.10000e-003 | 1.91853e-001 |
| 13 | 2.27500e-003 | 2.05743e-001 |
| 14 | 2.45000e-003 | 2.19632e-001 |
| 15 | 2.62500e-003 | 2.33521e-001 |
| 16 | 2.80000e-003 | 2.47411e-001 |
| 17 | 2.97500e-003 | 2.59775e-001 |
| 18 | 3.15000e-003 | 2.71878e-001 |
| 19 | 3.32500e-003 | 2.83980e-001 |
| 20 | 3.50000e-003 | 2.96083e-001 |
| 21 | 3.67500e-003 | 3.08185e-001 |
| 22 | 3.85000e-003 | 3.20288e-001 |
| 23 | 4.02500e-003 | 3.32391e-001 |
| 24 | 4.20000e-003 | 3.43567e-001 |
| 25 | 4.37500e-003 | 3.54586e-001 |
| 26 | 4.55000e-003 | 3.65606e-001 |
| 27 | 4.72500e-003 | 3.76625e-001 |
| 28 | 4.90000e-003 | 3.87644e-001 |
| 29 | 5.07500e-003 | 3.98663e-001 |
| 30 | 5.25000e-003 | 4.09682e-001 |
| 31 | 5.42500e-003 | 4.20701e-001 |

**PROJECT TITLE :**

| | Company | | Client | |
|---|---|---|---|---|
| MIDAS | Author | Nicola | File Name | allin - scuola muscoline - PE - PO - 00.txt |

| | | | |
|---|---|---|---|
| 32 | 5.60000e-003 | 4.31573e-001 | |
| 33 | 5.77500e-003 | 4.42131e-001 | |
| 34 | 5.95000e-003 | 4.52690e-001 | |
| 35 | 6.12500e-003 | 4.63249e-001 | |
| 36 | 6.30000e-003 | 4.73807e-001 | |
| 37 | 6.47500e-003 | 4.83916e-001 | |
| 38 | 6.65000e-003 | 4.84031e-001 | |
| 39 | 6.82500e-003 | 4.84146e-001 | |
| 40 | 7.00000e-003 | 4.84261e-001 | |
| 41 | 7.17500e-003 | 4.84376e-001 | |
| 42 | 7.35000e-003 | 4.84491e-001 | |
| 43 | 7.52500e-003 | 4.84607e-001 | |
| 44 | 7.70000e-003 | 4.84722e-001 | SLO(Dem.)SLD(Dem.)SLV(Dem.)SLC(Dem.) |
| 45 | 7.87500e-003 | 4.84837e-001 | |
| 46 | 8.05000e-003 | 4.84952e-001 | |
| 47 | 8.22500e-003 | 4.85067e-001 | |
| 48 | 8.40000e-003 | 4.85182e-001 | |
| 49 | 8.57500e-003 | 4.85297e-001 | |
| 50 | 8.75000e-003 | 4.85413e-001 | |
| 51 | 8.92500e-003 | 4.85528e-001 | |
| 52 | 9.10000e-003 | 4.85643e-001 | |
| 53 | 9.27500e-003 | 4.85758e-001 | |
| 54 | 9.45000e-003 | 4.85873e-001 | |
| 55 | 9.62500e-003 | 4.85988e-001 | |
| 56 | 9.80000e-003 | 4.86103e-001 | |
| 57 | 9.97500e-003 | 4.86219e-001 | |
| 58 | 1.01500e-002 | 4.86334e-001 | |
| 59 | 1.03250e-002 | 4.86449e-001 | |
| 60 | 1.05000e-002 | 4.86564e-001 | |
| 61 | 1.06750e-002 | 4.86679e-001 | |
| 62 | 1.08500e-002 | 4.86794e-001 | |
| 63 | 1.10250e-002 | 4.86909e-001 | |
| 64 | 1.12000e-002 | 4.87024e-001 | |
| 65 | 1.13750e-002 | 4.87140e-001 | |
| 66 | 1.15500e-002 | 4.87255e-001 | |

**PROJECT TITLE :**

| | Company | | Client | |
|---|---|---|---|---|
| MIDAS | Author | Nicola | File Name | allin - scuola muscoline - PE - PO - 00.txt |

| | | |
|---|---|---|
| 67 | 1.17250e-002 | 4.87370e-001 |
| 68 | 1.19000e-002 | 4.87485e-001 |
| 69 | 1.20750e-002 | 4.87600e-001 |
| 70 | 1.22500e-002 | 4.87715e-001 |
| 71 | 1.24250e-002 | 4.87830e-001 |
| 72 | 1.26000e-002 | 4.87945e-001 |
| 73 | 1.27750e-002 | 4.88061e-001 |
| 74 | 1.29500e-002 | 4.88176e-001 |
| 75 | 1.31250e-002 | 4.88291e-001 |
| 76 | 1.33000e-002 | 4.88406e-001 |
| 77 | 1.34750e-002 | 4.88521e-001 |
| 78 | 1.36500e-002 | 4.88636e-001 |
| 79 | 1.38250e-002 | 4.88751e-001 |
| 80 | 1.40000e-002 | 4.88867e-001 |
| 81 | 1.41750e-002 | 4.88982e-001 |
| 82 | 1.43500e-002 | 4.89097e-001 |
| 83 | 1.45250e-002 | 4.89212e-001 |
| 84 | 1.47000e-002 | 4.89327e-001 |
| 85 | 1.48750e-002 | 4.89442e-001 |
| 86 | 1.50500e-002 | 4.89557e-001 |
| 87 | 1.52250e-002 | 4.89672e-001 |
| 88 | 1.54000e-002 | 4.89788e-001 |
| 89 | 1.55750e-002 | 4.89903e-001 |
| 90 | 1.57500e-002 | 4.90018e-001 |
| 91 | 1.59250e-002 | 4.90133e-001 |
| 92 | 1.61000e-002 | 4.90248e-001 |
| 93 | 1.62750e-002 | 4.90363e-001 |
| 94 | 1.64500e-002 | 4.90478e-001 |
| 95 | 1.66250e-002 | 4.90593e-001 |
| 96 | 1.68000e-002 | 4.90709e-001 |
| 97 | 1.69750e-002 | 4.90824e-001 |
| 98 | 1.71500e-002 | 4.90939e-001 |
| 99 | 1.73250e-002 | 4.91054e-001 |
| 100 | 1.75000e-002 | 4.91169e-001 |

| | | |
|---|---|---|
| 101 | 1.76750e-002 | 4.91284e-001 |
| 102 | 1.78500e-002 | 4.91399e-001 |
| 103 | 1.80250e-002 | 4.91514e-001 |
| 104 | 1.82000e-002 | 4.91630e-001 |
| 105 | 1.83750e-002 | 4.91745e-001 |
| 106 | 1.85500e-002 | 4.91860e-001 |
| 107 | 1.87250e-002 | 4.91975e-001 |
| 108 | 1.89000e-002 | 4.92090e-001 |
| 109 | 1.90750e-002 | 4.92205e-001 |
| 110 | 1.92500e-002 | 4.92320e-001 |
| 111 | 1.94250e-002 | 4.92435e-001 |
| 112 | 1.96000e-002 | 4.92551e-001 |
| 113 | 1.97750e-002 | 4.92666e-001 |
| 114 | 1.99500e-002 | 4.92781e-001 |
| 115 | 2.01250e-002 | 4.92896e-001 |
| 116 | 2.03000e-002 | 4.93011e-001 |
| 117 | 2.04750e-002 | 4.93126e-001 |
| 118 | 2.06500e-002 | 4.93241e-001 |
| 119 | 2.08250e-002 | 4.93356e-001 |
| 120 | 2.10000e-002 | 4.93472e-001 |
| 121 | 2.11750e-002 | 4.93587e-001 |
| 122 | 2.13500e-002 | 4.93702e-001 |
| 123 | 2.15250e-002 | 4.93817e-001 |
| 124 | 2.17000e-002 | 4.93932e-001 |
| 125 | 2.18750e-002 | 4.94047e-001 |
| 126 | 2.20500e-002 | 4.94162e-001 |
| 127 | 2.22250e-002 | 4.94277e-001 |
| SLD(Cap.) | | |
| 128 | 2.24000e-002 | 4.74432e-001 |
| 129 | 2.25750e-002 | 4.74982e-001 |
| 130 | 2.27500e-002 | 4.75444e-001 |
| 131 | 2.29250e-002 | 4.75855e-001 |
| 132 | 2.31000e-002 | 4.76134e-001 |
| 133 | 2.32750e-002 | 4.59417e-001 |
| 134 | 2.34500e-002 | 4.59757e-001 |
| 135 | 2.36250e-002 | 4.42098e-001 |

**PROJECT TITLE :**

| | | | | |
|---|---|---|---|---|
| MIDAS | Company | | Client | |
| | Author | Nicola | File Name | allin - scuola muscoline - PE - PO - 00.txt |

| | | |
|---|---|---|
| 136 | 2.38000e-002 | 4.42438e-001 |
| 137 | 2.39750e-002 | 4.42752e-001 |
| 138 | 2.41500e-002 | 4.43032e-001 |
| 139 | 2.43250e-002 | 4.43311e-001 |
| 140 | 2.45000e-002 | 4.43539e-001 |
| 141 | 2.46750e-002 | 4.43654e-001 |
| 142 | 2.48500e-002 | 4.43768e-001 |
| 143 | 2.50250e-002 | 4.43883e-001 |
| 144 | 2.52000e-002 | 4.43997e-001 |
| 145 | 2.53750e-002 | 4.44112e-001 |
| 146 | 2.55500e-002 | 4.44226e-001 |
| 147 | 2.57250e-002 | 4.44341e-001 |
| 148 | 2.59000e-002 | 4.44455e-001 |
| 149 | 2.60750e-002 | 4.44570e-001 |
| 150 | 2.62500e-002 | 4.44684e-001 |
| 151 | 2.64250e-002 | 4.44799e-001 |
| 152 | 2.66000e-002 | 4.44913e-001 |
| 153 | 2.67750e-002 | 4.45028e-001 |
| 154 | 2.69500e-002 | 4.45142e-001 |
| 155 | 2.71250e-002 | 4.45257e-001 |
| 156 | 2.73000e-002 | 4.45371e-001 |
| 157 | 2.74750e-002 | 4.45486e-001 |
| 158 | 2.76500e-002 | 4.45600e-001 |
| 159 | 2.78250e-002 | 4.45715e-001 |
| 160 | 2.80000e-002 | 4.45829e-001 |
| 161 | 2.81750e-002 | 4.45944e-001 |
| 162 | 2.83500e-002 | 4.46058e-001 |
| 163 | 2.85250e-002 | 4.46173e-001 |
| 164 | 2.87000e-002 | 4.46287e-001 |
| 165 | 2.88750e-002 | 4.46402e-001 |
| 166 | 2.90500e-002 | 4.46516e-001 |
| 167 | 2.92250e-002 | 4.46631e-001 |
| 168 | 2.94000e-002 | 4.46745e-001 |
| 169 | 2.95750e-002 | 4.27033e-001 |

**PROJECT TITLE :**

| | | | | |
|---|---|---|---|---|
| MIDAS | Company | | Client | |
| | Author | Nicola | File Name | allin - scuola muscoline - PE - PO - 00.txt |

| | | |
|---|---|---|
| 170 | 2.97500e-002 | 4.27229e-001 |
| 171 | 2.99250e-002 | 4.27390e-001 |
| 172 | 3.01000e-002 | 4.27544e-001 |
| 173 | 3.02750e-002 | 4.27698e-001 |
| 174 | 3.04500e-002 | 4.27782e-001 |
| 175 | 3.06250e-002 | 4.27818e-001 |
| 176 | 3.08000e-002 | 4.27855e-001 |
| 177 | 3.09750e-002 | 4.27891e-001 |
| 178 | 3.11500e-002 | 4.27928e-001 |
| 179 | 3.13250e-002 | 4.27964e-001 |
| 180 | 3.15000e-002 | 4.28001e-001 |
| 181 | 3.16750e-002 | 4.28037e-001 |
| 182 | 3.18500e-002 | 4.28074e-001 |
| 183 | 3.20250e-002 | 4.28090e-001 |
| 184 | 3.22000e-002 | 4.28091e-001 |
| 185 | 3.23750e-002 | 4.28092e-001 |
| 186 | 3.25500e-002 | 4.28093e-001 |
| 187 | 3.27250e-002 | 4.28095e-001 |
| 188 | 3.29000e-002 | 4.28096e-001 |
| 189 | 3.30750e-002 | 4.28097e-001 |
| 190 | 3.32500e-002 | 4.28098e-001 |
| 191 | 3.34250e-002 | 4.28099e-001 |
| 192 | 3.36000e-002 | 4.28101e-001 |
| 193 | 3.37750e-002 | 4.28102e-001 |
| 194 | 3.39500e-002 | 4.28103e-001 |
| 195 | 3.41250e-002 | 4.28104e-001 |
| 196 | 3.43000e-002 | 4.28105e-001 |
| 197 | 3.44750e-002 | 4.28107e-001 |
| 198 | 3.46500e-002 | 4.28108e-001 |
| 199 | 3.48250e-002 | 4.28109e-001 |
| 200 | 3.50000e-002 | 4.28110e-001 |

| | | |
|---|---|---|
| Min : | 1.75000e-005 | 1.65741e-003 |
| Max : | 2.22250e-002 | 4.94277e-001 |

| | | | |
|---|---|---|---|
| Impresa: | | Pagina: | 1 |
| Progettista: | | Progetto: | |
| Indirizzo: | | Contratto N°: | |
| Telefono I Fax: | \| | Data: | 04/06/2020 |
| E-mail: | | | |

**Commenti del progettista:**

## 1 Dati da inserire

| | |
|---|---|
| **Tipo e dimensione dell'ancorante:** | **HIT-RE 500 V3 + HIT-V-F (8.8) M20** |
| Return period (service life in years): | 50 |
| Profondità di posa effettiva: | $h_{ef,act}$ = 200 mm ($h_{ef,limit}$ = - mm) |
| Materiale: | 8.8 |
| Certificazione No.: | ETA 16/0143 |
| Emesso I Valido: | 14/05/2019 \| - |
| Prova: | metodo di calcolo EN 1992-4, Chimico |
| Fissaggio distanziato: | $e_b$ = 0 mm (Senza distanziamento); t = 25 mm |
| Piastra d'ancoraggio: | $l_x$ x $l_y$ x t = 220 mm x 220 mm x 25 mm; (Spessore della piastra raccomandato: non calcolato |
| Profilo: | nessun profilo |
| Materiale base: | fessurato calcestruzzo, C20/25, $f_{c,cyl}$ = 20.00 N/mm$^2$; h = 400 mm, Temp. Breve/Lungo: 0/0 °C |
| **Installazione:** | **Foro eseguito con perforatore, Condizioni di installazione: asciutto** |
| Armatura: | nessuna armatura o interasse tra le armature >= 150 mm (qualunque Ø) o >= 100 mm (Ø <= 10 mm) senza armatura di bordo longitudinale |

[R] - Il calcolo dell'ancoraggio presuppone la presenza di una piastra di ancoraggio rigida.

**Geometria [mm] & Carichi [kN, kNm]**

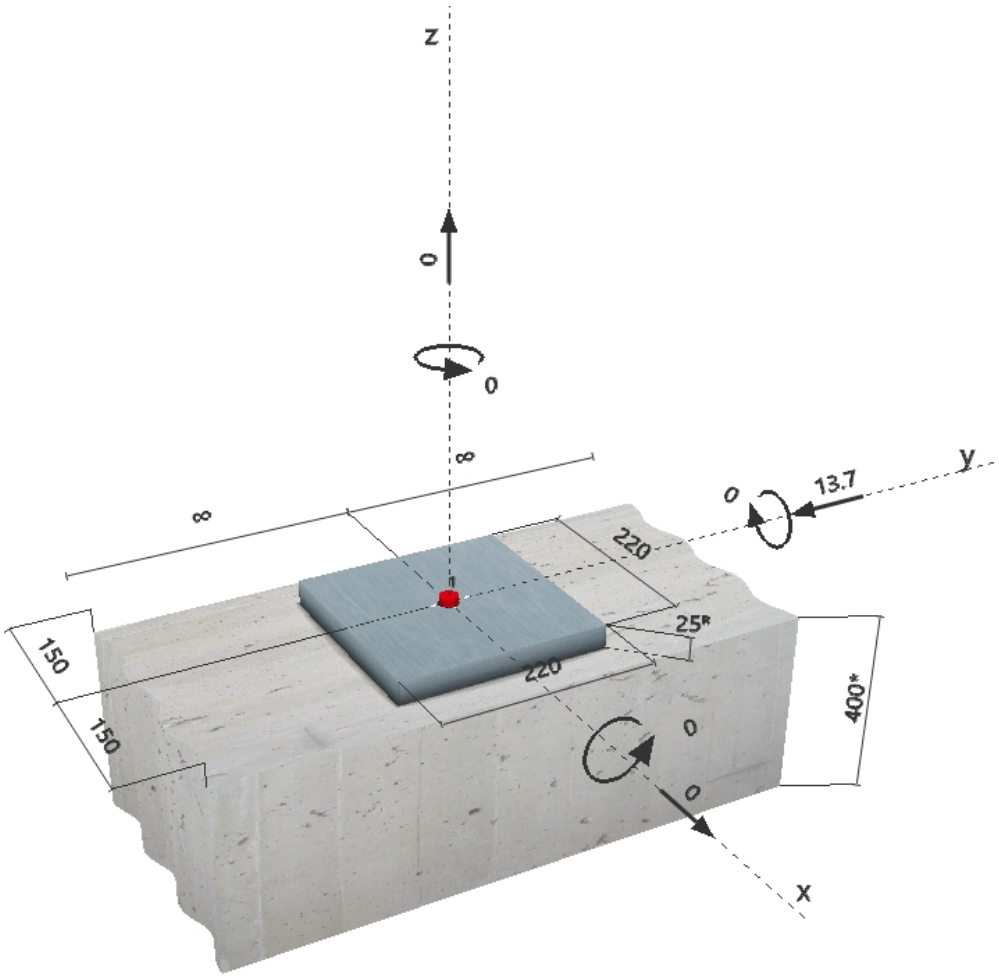



PROFIS Anchor ( c ) 2003-2009 Hilti AG, FL-9494 Schaan Hilti è un marchio registrato di Hilti AG, Schaan

| | | | |
|---|---|---|---|
| Impresa: | | Pagina: | 2 |
| Progettista: | | Progetto: | |
| Indirizzo: | | Contratto N°: | |
| Telefono I Fax: | \| | Data: | 04/06/2020 |
| E-mail: | | | |

### 1.1 Carichi permamenti

| $N_{sus}$ [kN] | $M_{x,sus}$ [kNm] | $M_{y,sus}$ [kNm] |
|---|---|---|
| 0.000 | 0.000 | 0.000 |

## 2 Condizione di carico/Carichi risultanti sull'ancorante (ULS)

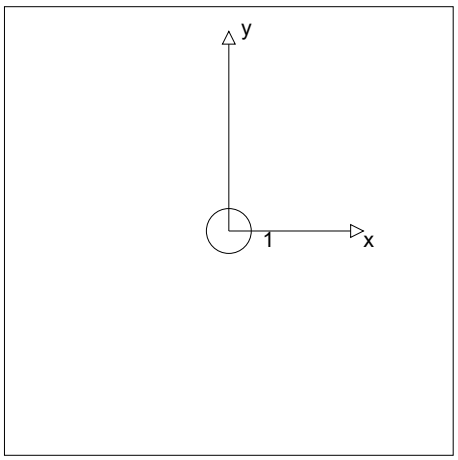


Condizione di carico: Carichi di progetto

**Carichi sull'ancorante [kN]**
Trazione: (+ Trazione, - Compressione)

| Ancorante | Trazione | Taglio | Taglio in dir. x | Taglio in dir. y |
|---|---|---|---|---|
| 1 | 0.000 | 13.700 | 0.000 | -13.700 |

Compressione max. nel calcestruzzo: - [‰]
Max. sforzo di compressione nel calcestruzzo: - [N/mm$^2$]
risultante delle forze di trazione nel (x/y)=(0/0): 0.000 [kN]
risultante delle forze di compressione (x/y)=(0/0): 0.000 [kN]

Le forze di ancoraggio vengono calcolate presupponendo una piastra di ancoraggio rigida.


PROFIS Anchor ( c ) 2003-2009 Hilti AG, FL-9494 Schaan Hilti è un marchio registrato di Hilti AG, Schaan

| | | | |
|---|---|---|---|
| Impresa: | | Pagina: | 3 |
| Progettista: | | Progetto: | |
| Indirizzo: | | Contratto N°: | |
| Telefono I Fax: | \| | Data: | 04/06/2020 |
| E-mail: | | | |

## 3 Carico di trazione (EN 1992-4, Sezione 7.2.1)

| | Carico [kN] | Resistenza [kN] | Utilizzo $\beta_N$ [%] | Stato |
|---|---|---|---|---|
| Rottura dell'acciaio* | N/A | N/A | N/A | N/A |
| Rottura combinata conica del calcestruzzo e per sfilamento** | N/A | N/A | N/A | N/A |
| Rottura conica del calcestruzzo** | N/A | N/A | N/A | N/A |
| Fessurazione** | N/A | N/A | N/A | N/A |

*ancorante più sollecitato **gruppo di ancoranti (ancoranti sollecitati)


PROFIS Anchor ( c ) 2003-2009 Hilti AG, FL-9494 Schaan Hilti è un marchio registrato di Hilti AG, Schaan

| | | | |
|---|---|---|---|
| Impresa: | | Pagina: | 4 |
| Progettista: | | Progetto: | |
| Indirizzo: | | Contratto N°: | |
| Telefono I Fax: | \| | Data: | 04/06/2020 |
| E-mail: | | | |

## 4 Carico di taglio (EN 1992-4, Sezione 7.2.2)

| | Carico [kN] | Resistenza [kN] | Utilizzo $\beta_V$ [%] | Stato |
|---|---|---|---|---|
| Rottura dell'acciaio (senza braccio di leva)* | 13.700 | 78.400 | 18 | OK |
| Rottura dell'acciaio (con braccio di leva)* | N/A | N/A | N/A | N/A |
| Rottura per pryout** | 13.700 | 55.192 | 25 | OK |
| Rottura del bordo del calcestruzzo in direzione x+** | 13.700 | 37.502 | 37 | OK |

*ancorante più sollecitato **gruppo di ancoranti (ancoranti specifici)

### 4.1 Rottura dell'acciaio (senza braccio di leva)

| $V^0_{Rk,s}$ [kN] | $k_7$ | $V_{Rk,s}$ [kN] | $\gamma_{M,s}$ | $V_{Rd,s}$ [kN] | $V_{Ed}$ [kN] |
|---|---|---|---|---|---|
| 98.000 | 1.000 | 98.000 | 1.250 | 78.400 | 13.700 |

### 4.2 Rottura per pryout (cono del calcestruzzo)

| $A_{c,N}$ [mm²] | $A^0_{c,N}$ [mm²] | $c_{cr,N}$ [mm] | $s_{cr,N}$ [mm] | $f_{c,cyl}$ [N/mm²] | $k_8$ |
|---|---|---|---|---|---|
| 180 000 | 360 000 | 300 | 600 | 20.00 | 2.000 |

| $e_{c1,V}$ [mm] | $\psi_{ec1,N}$ | $e_{c2,V}$ [mm] | $\psi_{ec2,N}$ | $\psi_{s,N}$ | $\psi_{re,N}$ | $\psi_{M,N}$ |
|---|---|---|---|---|---|---|
| 0 | 1.000 | 0 | 1.000 | 0.850 | 1.000 | 1.000 |

| $k_1$ | $N^0_{Rk,c}$ [kN] | $\gamma_{M,c,p}$ | $V_{Rd,cp}$ [kN] | $V_{Ed}$ [kN] |
|---|---|---|---|---|
| 7.700 | 97.398 | 1.500 | 55.192 | 13.700 |

### 4.3 Rottura del bordo del calcestruzzo in direzione x+

| $l_f$ [mm] | $d_{nom}$ [mm] | $k_9$ | $\alpha$ | $\beta$ | $f_{c,cyl}$ [N/mm²] |
|---|---|---|---|---|---|
| 200 | 20.0 | 1.700 | 0.115 | 0.067 | 20.00 |

| $c_1$ [mm] | $A_{c,V}$ [mm²] | $A^0_{c,V}$ [mm²] |
|---|---|---|
| 150 | 101 250 | 101 250 |

| $\psi_{s,V}$ | $\psi_{h,V}$ | $\psi_{\alpha,V}$ | $e_{c,V}$ [mm] | $\psi_{ec,V}$ | $\psi_{re,V}$ |
|---|---|---|---|---|---|
| 1.000 | 1.000 | 2.000 | 0 | 1.000 | 1.000 |

| $V^0_{Rk,c}$ [kN] | $k_T$ | $\gamma_{M,c}$ | $V_{Rd,c}$ [kN] | $V_{Ed}$ [kN] |
|---|---|---|---|---|
| 28.126 | 1.0 | 1.500 | 37.502 | 13.700 |

## 5 Spostamenti (ancorante più sollecitato)

Carichi a breve termine:

$N_{Sk}$ = 0.000 [kN] $\delta_N$ = 0.000 [mm]

$V_{Sk}$ = 10.148 [kN] $\delta_V$ = 0.406 [mm]

$\delta_{NV}$ = 0.406 [mm]

Carichi a lungo termine:

$N_{Sk}$ = 0.000 [kN] $\delta_N$ = 0.000 [mm]

$V_{Sk}$ = 10.148 [kN] $\delta_V$ = 0.609 [mm]

$\delta_{NV}$ = 0.609 [mm]

Commenti: Gli spostamenti a trazione risultano validi con metà del valore della coppia di serraggio richiesta per non fessurato calcestruzzo! Gli spostamenti a taglio sono validi trascurando l'attrito tra il calcestruzzo e la piastra d'ancoraggio! Lo spazio derivante dal foro eseguito con perforatore e dalle tolleranze dei fori non viene considerato in questo calcolo!

Gli spostamenti ammissibili dell'ancorante dipendono dalla struttura fissata e devono essere definiti dal progettista!


PROFIS Anchor ( c ) 2003-2009 Hilti AG, FL-9494 Schaan Hilti è un marchio registrato di Hilti AG, Schaan

| | | | |
|---|---|---|---|
| Impresa: | | Pagina: | 5 |
| Progettista: | | Progetto: | |
| Indirizzo: | | Contratto N°: | |
| Telefono I Fax: | \| | Data: | 04/06/2020 |
| E-mail: | | | |

## 6 Attenzione

- Fenomeni di ridistribuzione dei carichi sugli ancoranti derivanti da eventuali deformazioni elastiche della piastra non sono presi in considerazione. Si assume una piastra di ancoraggio sufficientemente rigida in modo che non risulti deformabile sotto l'azione di carichi!
- La verifica del trasferimento dei carichi all'interno del materiale di base è richiesta in accordo con EN 1992-4, Allegato A!
- Il progetto è valido solo se le dimensioni del foro nell'elemento da fissare non è maggiore del valore dato in tabella 6.1 di EN 1992-4! Per diametri maggiori del foro vedere sezione 6.2.2 di EN 1992-4!
- La lista accessori inclusa in questo report di calcolo è da ritenersi solo come informativa dell'utente. In ogni caso, le istruzioni d'uso fornite con il prodotto dovranno essere rispettate per garantire una corretta installazione.
- Per la determinazione di Psi_re,v (rottura di bordo del calcestruzzo) si assume un copriferro per le armature di bordo c = 30 mm
- L'adesione chimica caratteristica dipende dalle temperature di breve e di lungo periodo.
- Contattare Hilti per verificare la fornitura delle barre HIT-V.
- L'armatura di bordo non è necessaria per evitare la modalità di rottura per fessurazione (splitting)
- The characteristic bond resistances depend on the return period (service life in years): 50

# L'ancoraggio risulta verificato!


PROFIS Anchor ( c ) 2003-2009 Hilti AG, FL-9494 Schaan Hilti è un marchio registrato di Hilti AG, Schaan

| | | | |
|---|---|---|---|
| Impresa: | | Pagina: | 6 |
| Progettista: | | Progetto: | |
| Indirizzo: | | Contratto N°: | |
| Telefono I Fax: | \| | Data: | 04/06/2020 |
| E-mail: | | | |

# 7 Dati relativi all'installazione

Piastra d'ancoraggio, acciaio: -
Profilo: nessun profilo
Diametro del foro nella piastra: $d_f$ = 22 mm
Spessore della piastra (input): 25 mm
Spessore della piastra raccomandato: non calcolato
Metodo di perforazione: Foro con perforazione a roto-percussione
Pulizia: E' necessaria una pulizia accurata del foro (Premium cleaning)

Tipo e dimensione dell'ancorante: HIT-RE 500 V3 + HIT-V-F (8.8) M20
Coppia di serraggio: 0.150 kNm
Diametro del foro nel materiale base: 22 mm
Profondità del foro nel materiale base: 200 mm
Spessore minimo del materiale base: 244 mm

## 7.1 Accessori richiesti

| Perforazione | Pulizia | Posa |
|---|---|---|
| • Idoneo per rotopercussione<br>• Dimensione appropriata della punta del trapano | • Aria compressa con i relativi accessori necessari per soffiare a partire dal fondo del foro.<br>• Diametro appropriato dello scovolino | • Il dispenser include il portacartucce e il miscelatore<br>• Chiave dinamometrica |

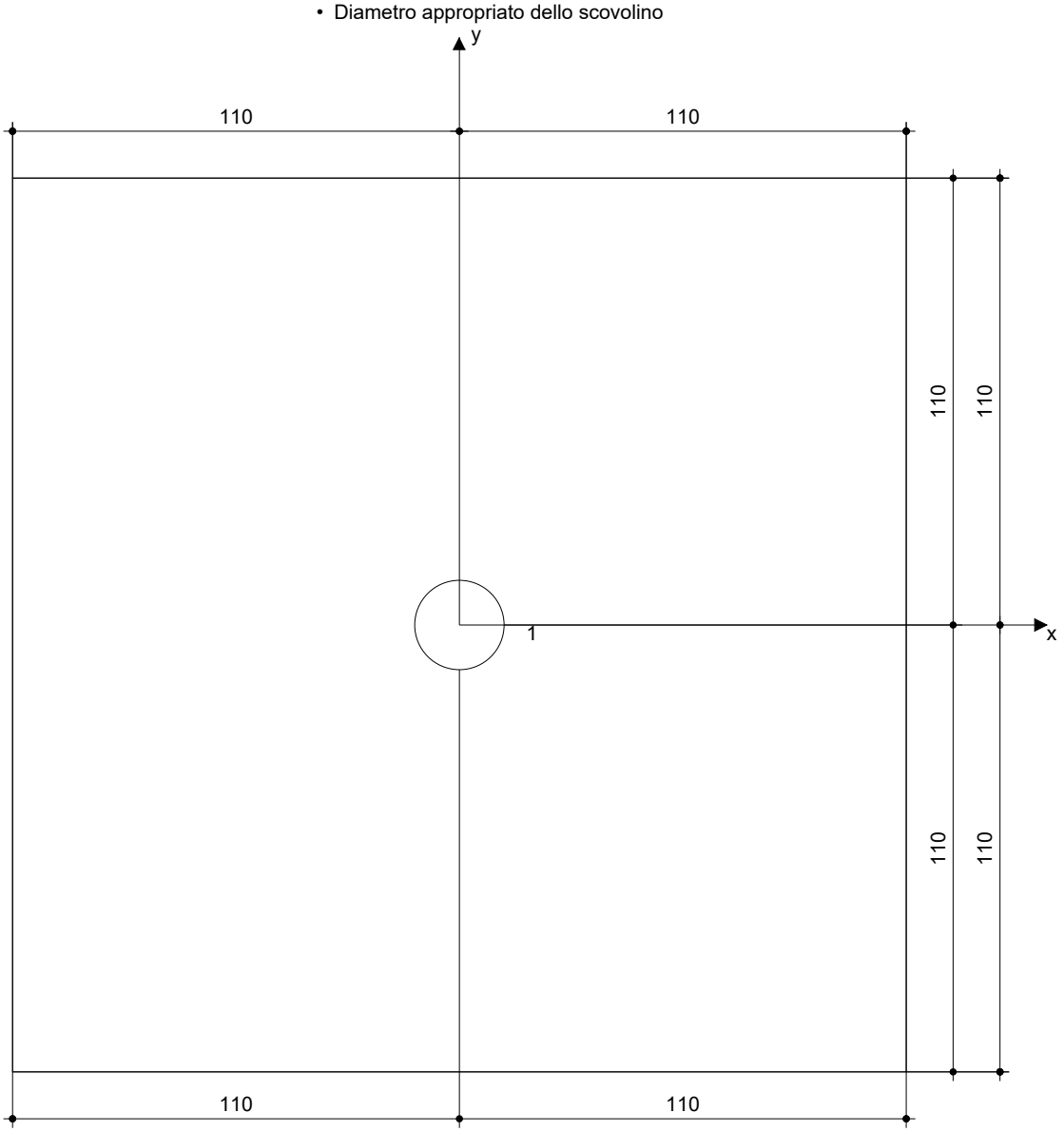


**Coordinate dell'ancorante [mm]**

| Ancorante | x | y | $c_{-x}$ | $c_{+x}$ | $c_{-y}$ | $c_{+y}$ |
|---|---|---|---|---|---|---|
| 1 | 0 | 0 | 150 | 150 | - | - |


PROFIS Anchor ( c ) 2003-2009 Hilti AG, FL-9494 Schaan Hilti è un marchio registrato di Hilti AG, Schaan

| | | | |
|---|---|---|---|
| Impresa: | | Pagina: | 7 |
| Progettista: | | Progetto: | |
| Indirizzo: | | Contratto N°: | |
| Telefono I Fax: | \| | Data: | 04/06/2020 |
| E-mail: | | | |

## 8 Osservazioni; doveri del cliente

- Tutte le informazioni e i dati contenuti nel Software riguardano solamente l'uso di prodotti Hilti e si basano su principi, formule e norme di sicurezza in conformità con le indicazioni tecniche, di funzionamento, montaggio e assemblaggio, ecc. della Hilti che devono essere rigorosamente rispettate da parte dell'utente. Tutt i valori in esso contenuti sono valori medi, quindi vanno effettuati test specifici prima di utilizzare il prodotto Hilti in questione. I risultati dei calcoli effettuati mediante il software si basano essenzialmente sui dati che l'utente ha inserito. Di conseguenza l'utente è l'unico responsabile per l'assenza di errori, la completezza e la pertinenza dei dati che vanno immessi. Inoltre, l'utente ha la responsabilità di far controllare e correggere i risultati dei calcoli da parte di un esperto, con particolare riguardo al rispetto di norme e autorizzazioni, prima di utilizzarli per uno scopo specifico. Il software serve solo come un compendio per interpretare le norme e i permessi, senza alcuna garanzia circa l'assenza di errori, la correttezza e la pertinenza dei risultati o di idoneità per una specifica applicazione.
- L'utente deve applicare tutti gli accorgimenti necessari e ragionevoli per prevenire o limitare i danni causati dal software. In particolare, l'utente deve organizzare un backup periodico dei programmi e dei dati e, se necessario, effettuare gli aggiornamenti del software offerti da Hilti in maniera regolare. Se non si utilizza la funzione di aggiornamento automatico del software, l'utente deve assicurarsi di utilizzare l'ultima versione e quindi di mantenere aggiornato il Software effettuando aggiornamenti manuali dal sito web Hilti. Hilti non è responsabile per le conseguenze derivanti da una violazione colposa di responsabilità da parte dell'utente, come il recupero di dati o programmi persi o danneggiati.


PROFIS Anchor ( c ) 2003-2009 Hilti AG, FL-9494 Schaan  Hilti è un marchio registrato di Hilti AG, Schaan

## 2.5. Rinforzo terrazzo

**PROJECT TITLE :**

| | | | | |
|---|---|---|---|---|
| MIDAS | Company | | Client | |
| | Author | Nicola | File Name | Trave HEB280.acs |

```
-------------------------------------------------------------------------------------------
 midas Gen - Steel Code Checking  [ Eurocode3:05 ]                          Gen 2019
===========================================================================================


       +==============================================================+
       |  MIDAS(Modeling, Integrated Design & Analysis Software)     |
       |  midas Gen - Design & checking system for windows           |
       +==============================================================+
       |  Steel Member Applicable Code Checking                      |
       |  Based On  Eurocode3:05, Eurocode3, AISC(15th)-LRFD16,      |
       |            AISC(15th)-ASD16, AISC(14th)-LRFD10,             |
       |            AISC(14th)-ASD10, AISC(13th)-LRFD05,             |
       |            AISC(13th)-ASD05, AISC-LRFD2K, AISC-LRFD93,      |
       |            AISC-ASD89, CSA-S16-01, BS5950-90                |
       |                                                             |
       |                                                             |
       |                                                             |
       |                                                             |
       |                                                             |
       |                                            (c)SINCE 1989    |
       +==============================================================+
       |  MIDAS Information Technology Co.,Ltd.         (MIDAS IT)   |
       |  MIDAS IT Design Development Team                           |
       +==============================================================+
       |            HomePage : www.MidasUser.com                     |
       +==============================================================+
       |  Gen 2019                                                   |
       +==============================================================+


    *. DEFINITION OF LOAD COMBINATIONS WITH SCALING UP FACTORS.
-------------------------------------------------------------------------------------------
     LCB  C    Loadcase Name(Factor) + Loadcase Name(Factor) + Loadcase Name(Factor)
-------------------------------------------------------------------------------------------
       1  1   Spinta sismica( 3.470)
       2  2   Spinta sismica( 2.080)
-------------------------------------------------------------------------------------------
```

**PROJECT TITLE :**

| | | | | |
|---|---|---|---|---|
| MIDAS | Company | | Client | |
| | Author | Nicola | File Name | Trave HEB280.acs |

```
-----------------------------------------------------------------------------------------
 midas Gen - Steel Code Checking  [ Eurocode3:05 ]                          Gen 2019
=========================================================================================


      *. PROJECT     :
      *. MEMBER NO   =      2,  ELEMENT TYPE = Beam
      *. LOADCOMB NO =      1,  MATERIAL NO  =     1,  SECTION NO =     1
      *. UNIT SYSTEM : kN, m

      *. SECTION PROPERTIES : Designation = HEB280
         Shape     = I - Section. (Rolled)
         Depth     =      0.280,  Top F Width =      0.280,  Bot.F Width =      0.280
         Web Thick =      0.011,  Top F Thick =      0.018,  Bot.F Thick =      0.018

         Area = 1.31000e-002,  Avy  = 1.05380e-002,  Avz  = 4.07300e-003
         Ybar = 1.40000e-001,  Zbar = 1.40000e-001,  Qyb  = 7.03220e-002,  Qzb  = 9.80000e-003
         Wely = 1.38000e-003,  Welz = 4.71000e-004,  Wply = 1.53400e-003,  Wplz = 7.12325e-004
         Iyy  = 1.92700e-004,  Izz  = 6.59000e-005,  Iyz  = 0.00000e+000
         iy   = 1.21000e-001,  iz   = 7.09000e-002
         J    = 1.18974e-006,  Cwp  = 1.13015e-006

      *. DESIGN PARAMETERS FOR STRENGTH EVALUATION :
         Ly   = 1.18000e+001,  Lz   = 1.18000e+001,  Lb   = 1.18000e+001
         Ky   = 1.00000e+000,  Kz   = 1.00000e+000

      *. MATERIAL PROPERTIES :
         Fy   = 2.75000e+005,  Es   = 2.10000e+008,  MATERIAL NAME  = S275


      *. FORCES AND MOMENTS AT (1/2) POINT :
         Axial Force      Fxx = 0.00000e+000
         Shear Forces     Fyy = 0.00000e+000,  Fzz = 0.00000e+000
         Bending Moments  My  = 6.03953e+001,  Mz  = 0.00000e+000
         End Moments      Myi = 0.00000e+000,  Myj = 0.00000e+000  (for Lb)
                          Myi = 0.00000e+000,  Myj = 0.00000e+000  (for Ly)
                          Mzi = 0.00000e+000,  Mzj = 0.00000e+000  (for Lz)

      *. Sign conventions for stress and axial force.
         - Stress : Compression positive.
         - Axial force: Tension positive.


=========================================================================================
   [[[*]]]   CLASSIFY LEFT-TOP FLANGE OF SECTION (BTR).
=========================================================================================

      ( ). Determine classification of compression outstand flanges.
           [ Eurocode3:05 Table 5.2 (Sheet 2 of 3), EN 1993-1-5 ]
           -. e      = SQRT( 235/fy )  =    0.92
           -. b/t    = BTR =    6.15
           -. sigma1 =   39371.154 KPa.
           -. sigma2 =   39371.154 KPa.
           -. BTR < 9*e  ( Class 1 : Plastic ).
```

**PROJECT TITLE :**

| | | | | |
|---|---|---|---|---|
| MIDAS | Company | | Client | |
| | Author | Nicola | File Name | Trave HEB280.acs |

```
-----------------------------------------------------------------------------------------
 midas Gen - Steel Code Checking  [ Eurocode3:05 ]                          Gen 2019
=========================================================================================


=========================================================================================
   [[[*]]]   CLASSIFY RIGHT-TOP FLANGE OF SECTION (BTR).
=========================================================================================

      ( ). Determine classification of compression outstand flanges.
           [ Eurocode3:05 Table 5.2 (Sheet 2 of 3), EN 1993-1-5 ]
           -. e      = SQRT( 235/fy )  =    0.92
           -. b/t    = BTR =    6.15
           -. sigma1 =   39371.154 KPa.
           -. sigma2 =   39371.154 KPa.
           -. BTR < 9*e  ( Class 1 : Plastic ).

=========================================================================================
   [[[*]]]   CLASSIFY LEFT-BOTTOM FLANGE OF SECTION (BTR).
=========================================================================================

      ( ). Determine classification of tension outstand flanges.
           -. Not Checking the Section Classification.

=========================================================================================
   [[[*]]]   CLASSIFY RIGHT-BOTTOM FLANGE OF SECTION (BTR).
=========================================================================================

      ( ). Determine classification of tension outstand flanges.
           -. Not Checking the Section Classification.

=========================================================================================
   [[[*]]]   CLASSIFY WEB OF SECTION (HTR).
=========================================================================================

      ( ). Determine classification of bending Internal Parts.
           [ Eurocode3:05 Table 5.2 (Sheet 1 of 3), EN 1993-1-5 ]
           -. e      = SQRT( 235/fy )  =    0.92
           -. d/t    = HTR =   18.67
           -. sigma1 =   27559.808 KPa.
           -. sigma2 =  -27559.808 KPa.
           -. HTR < 72*e  ( Class 1 : Plastic ).

=========================================================================================
   [[[*]]]   APPLIED FACTORS.
=========================================================================================

      ( ). Partial Factors (Gamma_Mi).
           [ Eurocode3:05 6.1 ]
           -. Gamma_M0 =  1.05
           -. Gamma_M1 =  1.05
           -. Gamma_M2 =  1.25

=========================================================================================
   [[[*]]]   CHECK AXIAL RESISTANCE.
=========================================================================================
```

```
-----------------------------------------------------------------------------------------
 midas Gen - Steel Code Checking  [ Eurocode3:05 ]                          Gen 2019
=========================================================================================


      ( ). Check slenderness ratio of axial tension member (l/i).
           -. l/i  =   166.4  <   300.0  --->  O.K.

      ( ). Calculate parameters for combined resistance.
           -. Lambda1   = Pi * SQRT(Es/fy)   =  86.815
           -. Lambda_bz = (KLz/iz) / Lambda1 =   1.917

      ( ). Calculate axial tensile resistance (Nt_Rd).
         [ Eurocode3:05  6.2.3 ]
           -. Nt_Rd  = fy * Area / Gamma_M0 =       3430.95 kN.

      ( ). Check ratio of axial resistance (N_Ed/Nt_Rd).
               N_Ed               0.00
           -. -----  =  ---------------  =  0.000  <  1.000  --->  O.K.
              Nt_Rd            3430.95

=========================================================================================
   [[[*]]]   CHECK SHEAR RESISTANCE.
=========================================================================================

      ( ). Calculate shear area.
           [ Eurocode3:05  6.2.6, EN1993-1-5:04 5.1 NOTE 2 ]
           -. eta   = 1.2 (Fy < 460 MPa.)
           -. r     =    0.0240 m.
           -. Avy   = Area - hw*tw                  =        0.0105 m^2.
           -. Avz1  = eta*hw*tw                     =        0.0031 m^2.
           -. Avz2  = Area - 2*B*tf + (tw + 2*r)*tf =        0.0041 m^2.
           -. Avz   = MAX[ Avz1, Avz2 ]             =        0.0041 m^2.

      ( ). Calculate plastic shear resistance in local-z direction (Vpl_Rdz).
           [ Eurocode3:05  6.1, 6.2.6 ]
           -. Vpl_Rdz = [ Avz*fy/SQRT(3) ] / Gamma_M0 =        615.88 kN.

      ( ). Shear Buckling Check.
           [ Eurocode3:05 6.2.6 ]
           -. HTR < 72*e/Eta   --->  No need to check!

      ( ). Check ratio of shear resistance (V_Edz/Vpl_Rdz).
           ( LCB =    1, POS =    J )
           -. Applied shear force : V_Edz   =         20.47 kN.
               V_Edz              20.47
           -. -------  =  ---------------  =  0.033  <  1.000  --->  O.K.
              Vpl_Rdz           615.88

=========================================================================================
   [[[*]]]   CHECK BENDING MOMENT RESISTANCE ABOUT MAJOR AXIS.
=========================================================================================
```

```
-----------------------------------------------------------------------------------------
 midas Gen - Steel Code Checking  [ Eurocode3:05 ]                          Gen 2019
=========================================================================================


      ( ). Calculate plastic resistance moment about major axis.
           [ Eurocode3:05  6.1, 6.2.5 ]
           -. Wply     =        0.0015 m^3.
           -. Mc_Rdy   = Wply * fy / Gamma_M0 =        401.76 kN-m.

      ( ). Check ratio of moment resistance (M_Edy/Mc_Rdy).
               M_Edy              60.40
           -. ------  =  ---------------  =  0.150  <  1.000  --->  O.K.
              Mc_Rdy             401.76

=========================================================================================
   [[[*]]]   CHECK BENDING MOMENT RESISTANCE ABOUT MINOR AXIS.
=========================================================================================

      ( ). Calculate plastic resistance moment about minor axis.
           [ Eurocode3:05  6.1, 6.2.5 ]
           -. Wplz     =        0.0007 m^3.
           -. Mc_Rdz   = Wplz * fy / Gamma_M0 =        186.56 kN-m.

      ( ). Check ratio of moment resistance (M_Edz/Mc_Rdz).
              M_Edz                0.00
           -. ------  =  ---------------  =  0.000  <  1.000  --->  O.K.
              Mc_Rdz             186.56

=========================================================================================
   [[[*]]]   CHECK LATERAL-TORSIONAL BUCKLING RESISTANCE.
=========================================================================================

      ( ). Calculate lateral-torsional buckling resistance (Mb_Rd).
           [ Eurocode3:05  6.1, 6.3.2 ]
           -. Por       =   0.300
           -. Gs        = Es / [ 2*(1+Por) ]  =80769230.769 KPa.
           -. Ncr       = Pi^2*Es*Izz / Lu^2  =        980.94 kN.
           -. psi       =   0.000
           -. C1        =   1.132
           -. Mcr       = C1 * Ncr * SQRT [ (Cwp/Izz) + (Gs*Ixx)/Ncr ] =        376.74 kN-m.

           -. Lambda_LT_bar  = SQRT [ Wply*fy / Mcr ] =   1.058
           -. Lambda_LT_bar0 =    0.400

           -. Lambda_LT_bar =    1.058 > Lambda_LT_bar0   =    0.400
           -. M_Ed/Mcr      =    0.160 > Lambda_LT_bar0^2 =    0.160
           If Lambda_LT_bar > Lambda_LT_bar0 and M_Ed/Mcr > Lambda_LT_bar0^2,
           Allowance for lateral-torsional buckling necessary.

           -. Alpha_LT  =   0.210
           -. Phi_LT    = 0.5 * { 1+Alpha_LT*(Lambda_LT_bar-0.2) + Lambda_LT_bar^2 }   =   1.150
           -. Xi_LT     = MIN [ 1 / {Phi_LT + SQRT(Phi_LT^2 - Lambda_LT_bar^2)}, 1.0 ] =   0.625
           -. Mb_Rd     = Xi_LT*Wply*fy / Gamma_M1 =        251.07 kN-m.
```

```
-----------------------------------------------------------------------------------------
 midas Gen - Steel Code Checking  [ Eurocode3:05 ]                          Gen 2019
=========================================================================================


      ( ). Check ratio of lateral-torsional buckling resistance (M_Edy/Mb_Rdy).
               M_Edy                60.40
           -. --------  =  ---------------  =  0.241  <  1.000  --->  O.K.
               Mb_Rdy              251.07

=========================================================================================
   [[[*]]]   CHECK INTERACTION OF COMBINED RESISTANCE.
=========================================================================================

      ( ). Calculate Major reduced design resistance of bending and shear.
           [ Eurocode3:05  6.2.8 (6.30) ]
           -. In case of V_Edz / Vpl_Rdz < 0.5
           -. My_Rd = Mc_Rdy =        401.76 kN-m.

      ( ). Calculate Minor reduced design resistance of bending and shear.
           [ Eurocode3:05  6.2.8 (6.30) ]
           -. In case of V_Edy / Vpl_Rdy < 0.5
           -. Mz_Rd = Mc_Rdz =        186.56 kN-m.

      ( ). Check general interaction ratio.
           [ Eurocode3:05  6.2.1 (6.2) ] - Class1 or Class2
                        N_Ed     M_Edy     M_Edz
           -. Rmax1  = ------ + ------- + -------
                        N_Rd     My_Rd     Mz_Rd
                     =  0.150  <  1.000  --->  O.K.

      ( ). Check interaction ratio of bending and axial force member.
           [ Eurocode3:05  6.2.9 (6.31 ~ 6.41) ] - Class1 or Class2
           -. n      = N_Ed / Npl_Rd   =  0.000
           -. a      = MIN[ (Area-2b*tf)/Area, 0.5 ] =  0.231
           -. Alpha  =  2.000
           -. Beta   = MAX[ 5*n, 1.0 ] =  1.000

           -. N_Ed < 0.25*Npl_Rd           =        857.74 kN.
           -. N_Ed < 0.5*hw*tw*fy/Gamma_M0 =        335.50 kN.
              Therefore, No allowance for the effect of axial force.
           -. Mny_Rd = Mply_Rd        =        401.76 kN-m.
           -. Rmaxy  = M_Edy / Mny_Rd =  0.150  <  1.000  --->  O.K.

           -. N_Ed < hw*tw*fy/Gamma_M0 =       1150.29 kN.
              Therefore, No allowance for the effect of axial force.
           -. Mnz_Rd = Mplz_Rd        =         186.56 kN-m.
           -. Rmaxz  = M_Edz / Mnz_Rd =  0.000  <  1.000  --->  O.K.

           -. Rmax2  = MAX[ Rmaxy, Rmaxz ] =  0.150  <  1.000  --->  O.K.

           -. Rmax   = MAX[ Rmax1, Rmax2 ] =  0.150  <  1.000  --->  O.K.
```

**PROJECT TITLE :**

| | | | | |
|---|---|---|---|---|
| MIDAS | Company | | Client | |
| | Author | Nicola | File Name | Trave HEB280.acs |

```
-----------------------------------------------------------------------------------------
 midas Gen - Steel Code Checking  [ Eurocode3:05 ]                          Gen 2019
=========================================================================================


=================================================================================
   [[[*]]]   CHECK DEFLECTION.
=================================================================================

      ( ). Compute Maximum Deflection.
           -. LCB      =    2
           -. DAF      =     1.000 (Deflection Amplification Factor).
           -. Position =     5.900m From i-end(Node 3).
           -. Def      =    -0.013 * DAF =   -0.013m (Global Z)
           -. Def_Lim  =     0.015m
              Def < Def_Lim   --->  O.K !
```

| | | | |
|---|---|---|---|
| Impresa: | | Pagina: | 1 |
| Progettista: | | Progetto: | |
| Indirizzo: | | Contratto N°: | |
| Telefono I Fax: | \| | Data: | 04/06/2020 |
| E-mail: | | | |

**Commenti del progettista:**

## 1 Dati da inserire

| | |
|---|---|
| **Tipo e dimensione dell'ancorante:** | **HIT-RE 500 V3 + HIT-V-F (8.8) M20** |
| Return period (service life in years): | 50 |
| Profondità di posa effettiva: | $h_{ef,act}$ = 200 mm ($h_{ef,limit}$ = - mm) |
| Materiale: | 8.8 |
| Certificazione No.: | Dati Tecnici Hilti |
| Emesso I Valido: | - \| - |
| Prova: | metodo di calcolo Esteso EN 1992-4, Chimico |
| Fissaggio distanziato: | $e_b$ = 0 mm (Senza distanziamento); t = 10 mm |
| Piastra d'ancoraggio: | $l_x$ x $l_y$ x t = 280 mm x 300 mm x 10 mm; (Spessore della piastra raccomandato: non calcolato |
| Profilo: | nessun profilo |
| Materiale base: | fessurato calcestruzzo, C16/20, $f_{c,cyl}$ = 16.00 N/mm$^2$; h = 280 mm, Temp. Breve/Lungo: 0/0 °C |
| **Installazione:** | **Foro eseguito con perforatore, Condizioni di installazione: asciutto** |
| Armatura: | nessuna armatura o interasse tra le armature >= 150 mm (qualunque Ø) o >= 100 mm (Ø <= 10 mm) senza armatura di bordo longitudinale |

[R] - Il calcolo dell'ancoraggio presuppone la presenza di una piastra di ancoraggio rigida.

**Geometria [mm] & Carichi [kN, kNm]**

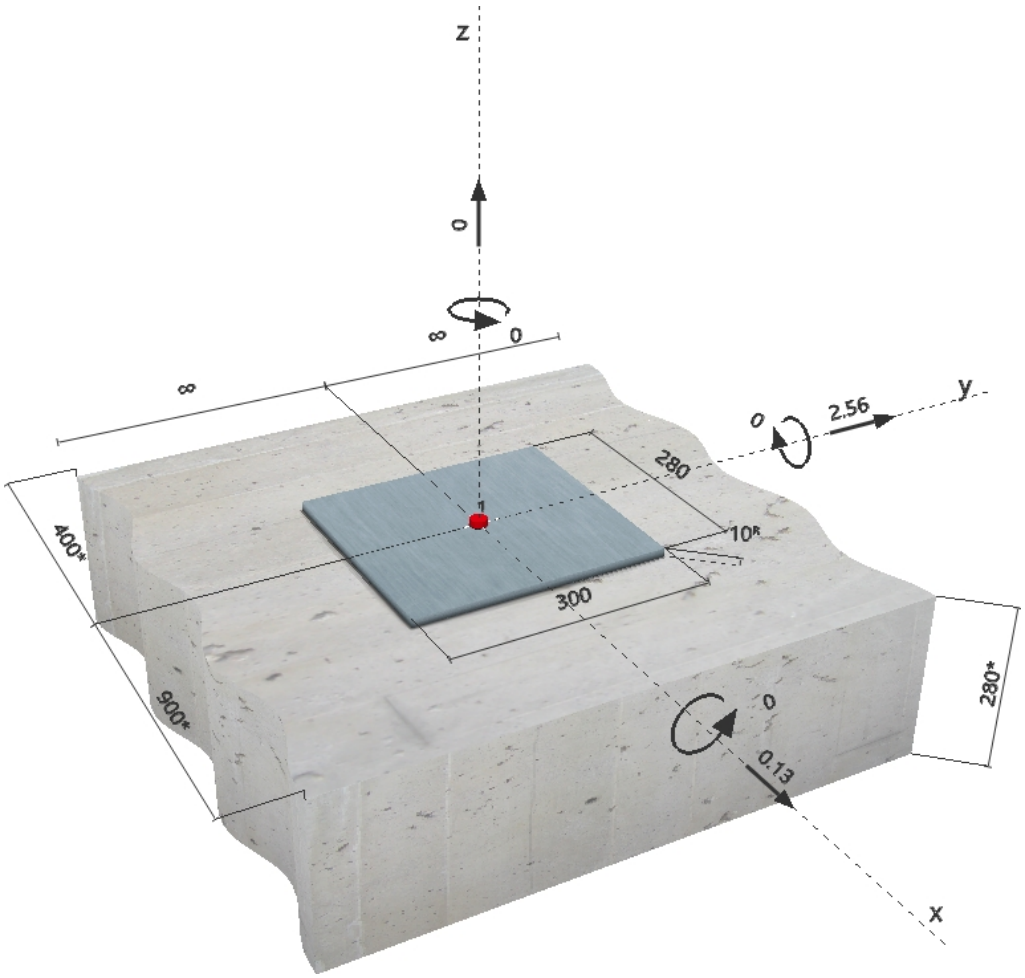



PROFIS Anchor ( c ) 2003-2009 Hilti AG, FL-9494 Schaan Hilti è un marchio registrato di Hilti AG, Schaan

| | | | |
|---|---|---|---|
| Impresa: | | Pagina: | 2 |
| Progettista: | | Progetto: | |
| Indirizzo: | | Contratto N°: | |
| Telefono I Fax: | \| | Data: | 04/06/2020 |
| E-mail: | | | |

### 1.1 Carichi permamenti

| $N_{sus}$ [kN] | $M_{x,sus}$ [kNm] | $M_{y,sus}$ [kNm] |
|---|---|---|
| 0.000 | 0.000 | 0.000 |

## 2 Condizione di carico/Carichi risultanti sull'ancorante (ULS)

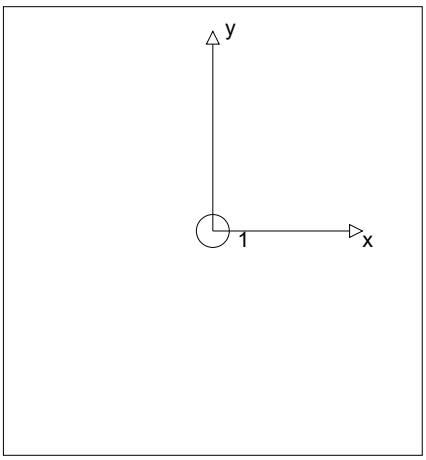


Condizione di carico: Carichi di progetto

**Carichi sull'ancorante [kN]**
Trazione: (+ Trazione, - Compressione)

| Ancorante | Trazione | Taglio | Taglio in dir. x | Taglio in dir. y |
|---|---|---|---|---|
| 1 | 0.000 | 2.563 | 0.130 | 2.560 |

Compressione max. nel calcestruzzo: - [‰]
Max. sforzo di compressione nel calcestruzzo: - [N/mm$^2$]
risultante delle forze di trazione nel (x/y)=(0/0): 0.000 [kN]
risultante delle forze di compressione (x/y)=(0/0): 0.000 [kN]

Le forze di ancoraggio vengono calcolate presupponendo una piastra di ancoraggio rigida.


PROFIS Anchor ( c ) 2003-2009 Hilti AG, FL-9494 Schaan Hilti è un marchio registrato di Hilti AG, Schaan

| | | | |
|---|---|---|---|
| Impresa: | | Pagina: | 3 |
| Progettista: | | Progetto: | |
| Indirizzo: | | Contratto N°: | |
| Telefono I Fax: | \| | Data: | 04/06/2020 |
| E-mail: | | | |

## 3 Carico di trazione (EN 1992-4, Sezione 7.2.1)

| | Carico [kN] | Resistenza [kN] | Utilizzo $\beta_N$ [%] | Stato |
|---|---|---|---|---|
| Rottura dell'acciaio* | N/A | N/A | N/A | N/A |
| Rottura combinata conica del calcestruzzo e per sfilamento** | N/A | N/A | N/A | N/A |
| Rottura conica del calcestruzzo** | N/A | N/A | N/A | N/A |
| Fessurazione** | N/A | N/A | N/A | N/A |

*ancorante più sollecitato **gruppo di ancoranti (ancoranti sollecitati)


PROFIS Anchor ( c ) 2003-2009 Hilti AG, FL-9494 Schaan Hilti è un marchio registrato di Hilti AG, Schaan

| | | | |
|---|---|---|---|
| Impresa: | | Pagina: | 4 |
| Progettista: | | Progetto: | |
| Indirizzo: | | Contratto N°: | |
| Telefono I Fax: | \| | Data: | 04/06/2020 |
| E-mail: | | | |

## 4 Carico di taglio (EN 1992-4, Sezione 7.2.2)

| | Carico [kN] | Resistenza [kN] | Utilizzo $\beta_V$ [%] | Stato |
|---|---|---|---|---|
| Rottura dell'acciaio (senza braccio di leva)* | 2.563 | 78.400 | 4 | OK |
| Rottura dell'acciaio (con braccio di leva)* | N/A | N/A | N/A | N/A |
| Rottura per pryout** | 2.563 | 116.154 | 3 | OK |
| Rottura del bordo del calcestruzzo in direzione x-** | 2.560 | 81.927 | 4 | OK |

*ancorante più sollecitato **gruppo di ancoranti (ancoranti specifici)

### 4.1 Rottura dell'acciaio (senza braccio di leva)

| $V^0_{Rk,s}$ [kN] | $k_7$ | $V_{Rk,s}$ [kN] | $\gamma_{M,s}$ | $V_{Rd,s}$ [kN] | $V_{Ed}$ [kN] |
|---|---|---|---|---|---|
| 98.000 | 1.000 | 98.000 | 1.250 | 78.400 | 2.563 |

### 4.2 Rottura per pryout (cono del calcestruzzo)

| $A_{c,N}$ [mm²] | $A^0_{c,N}$ [mm²] | $c_{cr,N}$ [mm] | $s_{cr,N}$ [mm] | $f_{c,cyl}$ [N/mm²] | $k_8$ |
|---|---|---|---|---|---|
| 360 000 | 360 000 | 300 | 600 | 16.00 | 2.000 |

| $e_{c1,V}$ [mm] | $\psi_{ec1,N}$ | $e_{c2,V}$ [mm] | $\psi_{ec2,N}$ | $\psi_{s,N}$ | $\psi_{re,N}$ | $\psi_{M,N}$ |
|---|---|---|---|---|---|---|
| 0 | 1.000 | 0 | 1.000 | 1.000 | 1.000 | 1.000 |

| $k_1$ | $N^0_{Rk,c}$ [kN] | $\gamma_{M,c,p}$ | $V_{Rd,cp}$ [kN] | $V_{Ed}$ [kN] |
|---|---|---|---|---|
| 7.700 | 87.116 | 1.500 | 116.154 | 2.563 |

### 4.3 Rottura del bordo del calcestruzzo in direzione x-

| $l_f$ [mm] | $d_{nom}$ [mm] | $k_9$ | $\alpha$ | $\beta$ | $f_{c,cyl}$ [N/mm²] |
|---|---|---|---|---|---|
| 200 | 20.0 | 1.700 | 0.071 | 0.055 | 16.00 |

| $c_1$ [mm] | $A_{c,V}$ [mm²] | $A^0_{c,V}$ [mm²] |
|---|---|---|
| 400 | 336 000 | 720 000 |

| $\psi_{s,V}$ | $\psi_{h,V}$ | $\psi_{\alpha,V}$ | $e_{c,V}$ [mm] | $\psi_{ec,V}$ | $\psi_{re,V}$ |
|---|---|---|---|---|---|
| 1.000 | 1.464 | 2.000 | 0 | 1.000 | 1.000 |

| $V^0_{Rk,c}$ [kN] | $k_T$ | $\gamma_{M,c}$ | $V_{Rd,c}$ [kN] | $V_{Ed}$ [kN] |
|---|---|---|---|---|
| 89.947 | 1.0 | 1.500 | 81.927 | 2.560 |

## 5 Spostamenti (ancorante più sollecitato)

Carichi a breve termine:

$N_{Sk}$ = 0.000 [kN] $\delta_N$ = 0.000 [mm]

$V_{Sk}$ = 1.899 [kN] $\delta_V$ = 0.076 [mm]

$\delta_{NV}$ = 0.076 [mm]

Carichi a lungo termine:

$N_{Sk}$ = 0.000 [kN] $\delta_N$ = 0.000 [mm]

$V_{Sk}$ = 1.899 [kN] $\delta_V$ = 0.114 [mm]

$\delta_{NV}$ = 0.114 [mm]

Commenti: Gli spostamenti a trazione risultano validi con metà del valore della coppia di serraggio richiesta per non fessurato calcestruzzo! Gli spostamenti a taglio sono validi trascurando l'attrito tra il calcestruzzo e la piastra d'ancoraggio! Lo spazio derivante dal foro eseguito con perforatore e dalle tolleranze dei fori non viene considerato in questo calcolo!

Gli spostamenti ammissibili dell'ancorante dipendono dalla struttura fissata e devono essere definiti dal progettista!


PROFIS Anchor ( c ) 2003-2009 Hilti AG, FL-9494 Schaan Hilti è un marchio registrato di Hilti AG, Schaan

| | | | |
|---|---|---|---|
| Impresa: | | Pagina: | 5 |
| Progettista: | | Progetto: | |
| Indirizzo: | | Contratto N°: | |
| Telefono I Fax: | \| | Data: | 04/06/2020 |
| E-mail: | | | |

## 6 Attenzione

- Fenomeni di ridistribuzione dei carichi sugli ancoranti derivanti da eventuali deformazioni elastiche della piastra non sono presi in considerazione. Si assume una piastra di ancoraggio sufficientemente rigida in modo che non risulti deformabile sotto l'azione di carichi!
- La verifica del trasferimento dei carichi all'interno del materiale di base è richiesta in accordo con EN 1992-4, Allegato A!
- Il progetto è valido solo se le dimensioni del foro nell'elemento da fissare non è maggiore del valore dato in tabella 6.1 di EN 1992-4! Per diametri maggiori del foro vedere sezione 6.2.2 di EN 1992-4!
- La lista accessori inclusa in questo report di calcolo è da ritenersi solo come informativa dell'utente. In ogni caso, le istruzioni d'uso fornite con il prodotto dovranno essere rispettate per garantire una corretta installazione.
- Per la determinazione di Psi_re,v (rottura di bordo del calcestruzzo) si assume un copriferro per le armature di bordo c = 30 mm
- L'adesione chimica caratteristica dipende dalle temperature di breve e di lungo periodo.
- Contattare Hilti per verificare la fornitura delle barre HIT-V.
- L'armatura di bordo non è necessaria per evitare la modalità di rottura per fessurazione (splitting)
- The characteristic bond resistances depend on the return period (service life in years): 50

# L'ancoraggio risulta verificato!


PROFIS Anchor ( c ) 2003-2009 Hilti AG, FL-9494 Schaan Hilti è un marchio registrato di Hilti AG, Schaan

| | | | |
|---|---|---|---|
| Impresa: | | Pagina: | 6 |
| Progettista: | | Progetto: | |
| Indirizzo: | | Contratto N°: | |
| Telefono I Fax: | \| | Data: | 04/06/2020 |
| E-mail: | | | |

# 7 Dati relativi all'installazione

Piastra d'ancoraggio, acciaio: -
Profilo: nessun profilo
Diametro del foro nella piastra: $d_f$ = 22 mm
Spessore della piastra (input): 10 mm
Spessore della piastra raccomandato: non calcolato
Metodo di perforazione: Foro con perforazione a roto-percussione
Pulizia: E' necessaria una pulizia accurata del foro (Premium cleaning)

Tipo e dimensione dell'ancorante: HIT-RE 500 V3 + HIT-V-F (8.8) M20
Coppia di serraggio: 0.150 kNm
Diametro del foro nel materiale base: 22 mm
Profondità del foro nel materiale base: 200 mm
Spessore minimo del materiale base: 244 mm

## 7.1 Accessori richiesti

| Perforazione | Pulizia | Posa |
|---|---|---|
| • Idoneo per rotopercussione<br>• Dimensione appropriata della punta del trapano | • Aria compressa con i relativi accessori necessari per soffiare a partire dal fondo del foro.<br>• Diametro appropriato dello scovolino | • Il dispenser include il portacartucce e il miscelatore<br>• Chiave dinamometrica |

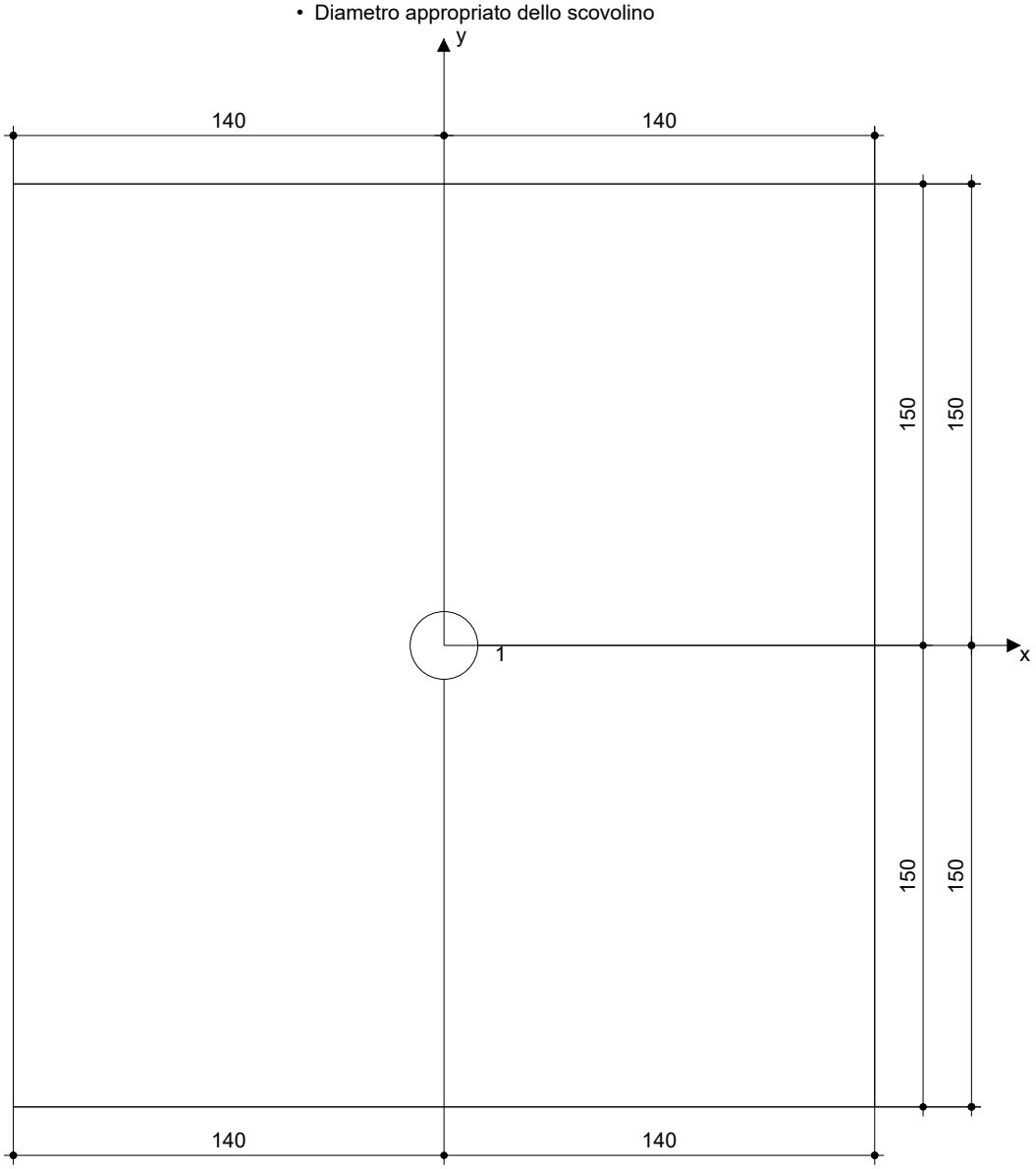


**Coordinate dell'ancorante [mm]**

| Ancorante | x | y | $c_{-x}$ | $c_{+x}$ | $c_{-y}$ | $c_{+y}$ |
|---|---|---|---|---|---|---|
| 1 | 0 | 0 | 400 | 900 | - | - |


PROFIS Anchor ( c ) 2003-2009 Hilti AG, FL-9494 Schaan Hilti è un marchio registrato di Hilti AG, Schaan

| | | | |
|---|---|---|---|
| Impresa: | | Pagina: | 7 |
| Progettista: | | Progetto: | |
| Indirizzo: | | Contratto N°: | |
| Telefono I Fax: | \| | Data: | 04/06/2020 |
| E-mail: | | | |

## 8 Osservazioni; doveri del cliente

- Tutte le informazioni e i dati contenuti nel Software riguardano solamente l'uso di prodotti Hilti e si basano su principi, formule e norme di sicurezza in conformità con le indicazioni tecniche, di funzionamento, montaggio e assemblaggio, ecc. della Hilti che devono essere rigorosamente rispettate da parte dell'utente. Tutt i valori in esso contenuti sono valori medi, quindi vanno effettuati test specifici prima di utilizzare il prodotto Hilti in questione. I risultati dei calcoli effettuati mediante il software si basano essenzialmente sui dati che l'utente ha inserito. Di conseguenza l'utente è l'unico responsabile per l'assenza di errori, la completezza e la pertinenza dei dati che vanno immessi. Inoltre, l'utente ha la responsabilità di far controllare e correggere i risultati dei calcoli da parte di un esperto, con particolare riguardo al rispetto di norme e autorizzazioni, prima di utilizzarli per uno scopo specifico. Il software serve solo come un compendio per interpretare le norme e i permessi, senza alcuna garanzia circa l'assenza di errori, la correttezza e la pertinenza dei risultati o di idoneità per una specifica applicazione.
- L'utente deve applicare tutti gli accorgimenti necessari e ragionevoli per prevenire o limitare i danni causati dal software. In particolare, l'utente deve organizzare un backup periodico dei programmi e dei dati e, se necessario, effettuare gli aggiornamenti del software offerti da Hilti in maniera regolare. Se non si utilizza la funzione di aggiornamento automatico del software, l'utente deve assicurarsi di utilizzare l'ultima versione e quindi di mantenere aggiornato il Software effettuando aggiornamenti manuali dal sito web Hilti. Hilti non è responsabile per le conseguenze derivanti da una violazione colposa di responsabilità da parte dell'utente, come il recupero di dati o programmi persi o danneggiati.


PROFIS Anchor ( c ) 2003-2009 Hilti AG, FL-9494 Schaan  Hilti è un marchio registrato di Hilti AG, Schaan

## 2.6. Rinforzo tettoia

**PROJECT TITLE :**

| | | | | |
|---|---|---|---|---|
| MIDAS | Company | | Client | |
| | Author | | File Name | scuola muscoline - reticolare - PE - 00.acs |

```
-------------------------------------------------------------------------------------------
 midas Gen - Steel Code Checking  [ Eurocode3:05 ]                          Gen 2019
===========================================================================================


       +==============================================================+
       |  MIDAS(Modeling, Integrated Design & Analysis Software)     |
       |  midas Gen - Design & checking system for windows           |
       +==============================================================+
       |  Steel Member Applicable Code Checking                      |
       |  Based On  Eurocode3:05, Eurocode3, AISC(15th)-LRFD16,      |
       |            AISC(15th)-ASD16, AISC(14th)-LRFD10,             |
       |            AISC(14th)-ASD10, AISC(13th)-LRFD05,             |
       |            AISC(13th)-ASD05, AISC-LRFD2K, AISC-LRFD93,      |
       |            AISC-ASD89, CSA-S16-01, BS5950-90                |
       |                                                             |
       |                                                             |
       |                                                             |
       |                                                             |
       |                                                             |
       |                                            (c)SINCE 1989    |
       +==============================================================+
       |  MIDAS Information Technology Co.,Ltd.         (MIDAS IT)   |
       |  MIDAS IT Design Development Team                           |
       +==============================================================+
       |            HomePage : www.MidasUser.com                     |
       +==============================================================+
       |  Gen 2019                                                   |
       +==============================================================+


    *. DEFINITION OF LOAD COMBINATIONS WITH SCALING UP FACTORS.
-------------------------------------------------------------------------------------------
     LCB  C    Loadcase Name(Factor) + Loadcase Name(Factor) + Loadcase Name(Factor)
-------------------------------------------------------------------------------------------
       1  1               pp( 1.300) +         g1+g2( 4.810) +             q( 1.860)
       2  2            g1+g2( 3.700) +             q( 1.240) +            pp( 1.000)
-------------------------------------------------------------------------------------------
```

```
-----------------------------------------------------------------------------------------
 midas Gen - Steel Code Checking  [ Eurocode3:05 ]                          Gen 2019
=========================================================================================


      *. PROJECT     :
      *. MEMBER NO   =      1,  ELEMENT TYPE = Beam
      *. LOADCOMB NO =      1,  MATERIAL NO  =     1,  SECTION NO =     1
      *. UNIT SYSTEM : kN, m

      *. SECTION PROPERTIES : Designation = HEA180
         Shape     = I - Section. (Rolled)
         Depth     =      0.171,  Top F Width =      0.180,  Bot.F Width =      0.180
         Web Thick =      0.006,  Top F Thick =      0.009,  Bot.F Thick =      0.009

         Area = 4.53000e-003,  Avy  = 3.61800e-003,  Avz  = 1.45200e-003
         Ybar = 9.00000e-002,  Zbar = 8.55000e-002,  Qyb  = 2.59018e-002,  Qzb  = 4.05000e-003
         Wely = 2.94000e-004,  Welz = 1.03000e-004,  Wply = 3.24000e-004,  Wplz = 1.55268e-004
         Iyy  = 2.51000e-005,  Izz  = 9.25000e-006,  Iyz  = 0.00000e+000
         iy   = 7.45000e-002,  iz   = 4.52000e-002
         J    = 1.14513e-007,  Cwp  = 6.02109e-008

      *. DESIGN PARAMETERS FOR STRENGTH EVALUATION :
         Ly   = 3.13000e+000,  Lz   = 1.56500e+000,  Lb   = 1.56500e+000
         Ky   = 1.00000e+000,  Kz   = 1.00000e+000

      *. MATERIAL PROPERTIES :
         Fy   = 2.75000e+005,  Es   = 2.10000e+008,  MATERIAL NAME  = S275


      *. FORCES AND MOMENTS AT (1/2) POINT :
         Axial Force      Fxx = 0.00000e+000
         Shear Forces     Fyy = 0.00000e+000,  Fzz = 1.16543e+001
         Bending Moments  My  = 1.87942e+001,  Mz  = 0.00000e+000
         End Moments      Myi = 0.00000e+000,  Myj = 1.87942e+001  (for Lb)
                          Myi = 0.00000e+000,  Myj = 0.00000e+000  (for Ly)
                          Mzi = 0.00000e+000,  Mzj = 0.00000e+000  (for Lz)

      *. Sign conventions for stress and axial force.
         - Stress : Compression positive.
         - Axial force: Tension positive.


=========================================================================================
   [[[*]]]   CLASSIFY LEFT-TOP FLANGE OF SECTION (BTR).
=========================================================================================

      ( ). Determine classification of compression outstand flanges.
           [ Eurocode3:05 Table 5.2 (Sheet 2 of 3), EN 1993-1-5 ]
           -. e      = SQRT( 235/fy )  =    0.92
           -. b/t    = BTR =    7.58
           -. sigma1 =   58006.686 KPa.
           -. sigma2 =   58006.686 KPa.
           -. BTR < 9*e  ( Class 1 : Plastic ).
```

```
-----------------------------------------------------------------------------------------
 midas Gen - Steel Code Checking  [ Eurocode3:05 ]                          Gen 2019
=========================================================================================


=========================================================================================
   [[[*]]]   CLASSIFY RIGHT-TOP FLANGE OF SECTION (BTR).
=========================================================================================

      ( ). Determine classification of compression outstand flanges.
           [ Eurocode3:05 Table 5.2 (Sheet 2 of 3), EN 1993-1-5 ]
           -. e      = SQRT( 235/fy )  =    0.92
           -. b/t    = BTR =    7.58
           -. sigma1 =   58006.686 KPa.
           -. sigma2 =   58006.686 KPa.
           -. BTR < 9*e  ( Class 1 : Plastic ).

=========================================================================================
   [[[*]]]   CLASSIFY LEFT-BOTTOM FLANGE OF SECTION (BTR).
=========================================================================================

      ( ). Determine classification of tension outstand flanges.
           -. Not Checking the Section Classification.

=========================================================================================
   [[[*]]]   CLASSIFY RIGHT-BOTTOM FLANGE OF SECTION (BTR).
=========================================================================================

      ( ). Determine classification of tension outstand flanges.
           -. Not Checking the Section Classification.

=========================================================================================
   [[[*]]]   CLASSIFY WEB OF SECTION (HTR).
=========================================================================================

      ( ). Determine classification of bending Internal Parts.
           [ Eurocode3:05 Table 5.2 (Sheet 1 of 3), EN 1993-1-5 ]
           -. e      = SQRT( 235/fy )  =    0.92
           -. d/t    = HTR =   20.33
           -. sigma1 =   41384.887 KPa.
           -. sigma2 =  -41384.887 KPa.
           -. HTR < 72*e  ( Class 1 : Plastic ).

=========================================================================================
   [[[*]]]   APPLIED FACTORS.
=========================================================================================

      ( ). Partial Factors (Gamma_Mi).
           [ Eurocode3:05 6.1 ]
           -. Gamma_M0 =  1.05
           -. Gamma_M1 =  1.05
           -. Gamma_M2 =  1.25

=========================================================================================
   [[[*]]]   CHECK AXIAL RESISTANCE.
=========================================================================================
```

```
-----------------------------------------------------------------------------------------
 midas Gen - Steel Code Checking  [ Eurocode3:05 ]                          Gen 2019
=========================================================================================


      ( ). Check slenderness ratio of axial tension member (l/i).
           -. l/i  =    42.0  <   300.0  --->  O.K.

      ( ). Calculate parameters for combined resistance.
           -. Lambda1   = Pi * SQRT(Es/fy)   =  86.815
           -. Lambda_bz = (KLz/iz) / Lambda1 =   0.399

      ( ). Calculate axial tensile resistance (Nt_Rd).
         [ Eurocode3:05  6.2.3 ]
           -. Nt_Rd  = fy * Area / Gamma_M0 =       1186.43 kN.

      ( ). Check ratio of axial resistance (N_Ed/Nt_Rd).
               N_Ed               0.00
           -. -----  =  ---------------  =  0.000  <  1.000  --->  O.K.
              Nt_Rd            1186.43

=========================================================================================
   [[[*]]]   CHECK SHEAR RESISTANCE.
=========================================================================================

      ( ). Calculate shear area.
           [ Eurocode3:05  6.2.6, EN1993-1-5:04 5.1 NOTE 2 ]
           -. eta   = 1.2 (Fy < 460 MPa.)
           -. r     =    0.0150 m.
           -. Avy   = Area - hw*tw                  =        0.0036 m^2.
           -. Avz1  = eta*hw*tw                     =        0.0011 m^2.
           -. Avz2  = Area - 2*B*tf + (tw + 2*r)*tf =        0.0015 m^2.
           -. Avz   = MAX[ Avz1, Avz2 ]             =        0.0015 m^2.

      ( ). Calculate plastic shear resistance in local-z direction (Vpl_Rdz).
           [ Eurocode3:05  6.1, 6.2.6 ]
           -. Vpl_Rdz = [ Avz*fy/SQRT(3) ] / Gamma_M0 =        219.56 kN.

      ( ). Shear Buckling Check.
           [ Eurocode3:05 6.2.6 ]
           -. HTR < 72*e/Eta   --->  No need to check!

      ( ). Check ratio of shear resistance (V_Edz/Vpl_Rdz).
           ( LCB =    1, POS =    J )
           -. Applied shear force : V_Edz   =         12.36 kN.
               V_Edz              12.36
           -. -------  =  ---------------  =  0.056  <  1.000  --->  O.K.
              Vpl_Rdz           219.56

=========================================================================================
   [[[*]]]   CHECK BENDING MOMENT RESISTANCE ABOUT MAJOR AXIS.
=========================================================================================
```

```
-----------------------------------------------------------------------------------------
 midas Gen - Steel Code Checking  [ Eurocode3:05 ]                          Gen 2019
=========================================================================================


      ( ). Calculate plastic resistance moment about major axis.
           [ Eurocode3:05  6.1, 6.2.5 ]
           -. Wply     =        0.0003 m^3.
           -. Mc_Rdy   = Wply * fy / Gamma_M0 =         84.86 kN-m.

      ( ). Check ratio of moment resistance (M_Edy/Mc_Rdy).
               M_Edy              18.79
           -. ------  =  ---------------  =  0.221  <  1.000  --->  O.K.
              Mc_Rdy              84.86

=========================================================================================
   [[[*]]]   CHECK BENDING MOMENT RESISTANCE ABOUT MINOR AXIS.
=========================================================================================

      ( ). Calculate plastic resistance moment about minor axis.
           [ Eurocode3:05  6.1, 6.2.5 ]
           -. Wplz     =        0.0002 m^3.
           -. Mc_Rdz   = Wplz * fy / Gamma_M0 =         40.67 kN-m.

      ( ). Check ratio of moment resistance (M_Edz/Mc_Rdz).
              M_Edz                0.00
           -. ------  =  ---------------  =  0.000  <  1.000  --->  O.K.
              Mc_Rdz              40.67

=========================================================================================
   [[[*]]]   CHECK LATERAL-TORSIONAL BUCKLING RESISTANCE.
=========================================================================================

      ( ). Calculate lateral-torsional buckling resistance (Mb_Rd).
           [ Eurocode3:05  6.1, 6.3.2 ]
           -. Por       =   0.300
           -. Gs        = Es / [ 2*(1+Por) ]  =80769230.769 KPa.
           -. Ncr       = Pi^2*Es*Izz / Lu^2  =       7827.66 kN.
           -. psi       =   0.000
           -. C1        =   1.132
           -. Mcr       = C1 * Ncr * SQRT [ (Cwp/Izz) + (Gs*Ixx)/Ncr ] =        777.08 kN-m.

           -. Lambda_LT_bar  = SQRT [ Wply*fy / Mcr ] =   0.339
           -. Lambda_LT_bar0 =    0.400

           -. Lambda_LT_bar =    0.339 < Lambda_LT_bar0   =    0.400
           -. M_Ed/Mcr      =    0.024 < Lambda_LT_bar0^2 =    0.160
           If Lambda_LT_bar < Lambda_LT_bar0 or M_Ed/Mcr < Lambda_LT_bar0^2,
           No allowance for lateral-torsional buckling necessary.

=========================================================================================
   [[[*]]]   CHECK INTERACTION OF COMBINED RESISTANCE.
=========================================================================================
```

```
-----------------------------------------------------------------------------------------
 midas Gen - Steel Code Checking  [ Eurocode3:05 ]                          Gen 2019
=========================================================================================


      ( ). Calculate Major reduced design resistance of bending and shear.
           [ Eurocode3:05  6.2.8 (6.30) ]
           -. In case of V_Edz / Vpl_Rdz < 0.5
           -. My_Rd = Mc_Rdy =         84.86 kN-m.

      ( ). Calculate Minor reduced design resistance of bending and shear.
           [ Eurocode3:05  6.2.8 (6.30) ]
           -. In case of V_Edy / Vpl_Rdy < 0.5
           -. Mz_Rd = Mc_Rdz =         40.67 kN-m.

      ( ). Check general interaction ratio.
           [ Eurocode3:05  6.2.1 (6.2) ] - Class1 or Class2
                        N_Ed     M_Edy     M_Edz
           -. Rmax1  = ------ + ------- + -------
                        N_Rd     My_Rd     Mz_Rd
                     =  0.221  <  1.000  --->  O.K.

      ( ). Check interaction ratio of bending and axial force member.
           [ Eurocode3:05  6.2.9 (6.31 ~ 6.41) ] - Class1 or Class2
           -. n      = N_Ed / Npl_Rd   =  0.000
           -. a      = MIN[ (Area-2b*tf)/Area, 0.5 ] =  0.245
           -. Alpha  =  2.000
           -. Beta   = MAX[ 5*n, 1.0 ] =  1.000

           -. N_Ed < 0.25*Npl_Rd           =        296.61 kN.
           -. N_Ed < 0.5*hw*tw*fy/Gamma_M0 =        119.43 kN.
              Therefore, No allowance for the effect of axial force.
           -. Mny_Rd = Mply_Rd        =         84.86 kN-m.
           -. Rmaxy  = M_Edy / Mny_Rd =  0.221  <  1.000  --->  O.K.

           -. N_Ed < hw*tw*fy/Gamma_M0 =        378.19 kN.
              Therefore, No allowance for the effect of axial force.
           -. Mnz_Rd = Mplz_Rd        =          40.67 kN-m.
           -. Rmaxz  = M_Edz / Mnz_Rd =  0.000  <  1.000  --->  O.K.

           -. Rmax2  = MAX[ Rmaxy, Rmaxz ] =  0.221  <  1.000  --->  O.K.

           -. Rmax   = MAX[ Rmax1, Rmax2 ] =  0.221  <  1.000  --->  O.K.

=========================================================================================
   [[[*]]]   CHECK DEFLECTION.
=========================================================================================

      ( ). Compute Maximum Deflection.
           -. LCB      =    2
           -. DAF      =     1.000 (Deflection Amplification Factor).
           -. Position =     1.565m From i-end(Node 1).
           -. Def      =    -0.002 * DAF =   -0.002m (Global Z)
           -. Def_Lim  =     0.016m
              Def < Def_Lim   --->  O.K !
```

```
-----------------------------------------------------------------------------------------
 midas Gen - Steel Code Checking  [ Eurocode3:05 ]                          Gen 2019
=========================================================================================


      *. PROJECT     :
      *. MEMBER NO   =      2,  ELEMENT TYPE = Beam
      *. LOADCOMB NO =      1,  MATERIAL NO  =     1,  SECTION NO =     1
      *. UNIT SYSTEM : kN, m

      *. SECTION PROPERTIES : Designation = HEA180
         Shape     = I - Section. (Rolled)
         Depth     =      0.171,  Top F Width =      0.180,  Bot.F Width =      0.180
         Web Thick =      0.006,  Top F Thick =      0.009,  Bot.F Thick =      0.009

         Area = 4.53000e-003,  Avy  = 3.61800e-003,  Avz  = 1.45200e-003
         Ybar = 9.00000e-002,  Zbar = 8.55000e-002,  Qyb  = 2.59018e-002,  Qzb  = 4.05000e-003
         Wely = 2.94000e-004,  Welz = 1.03000e-004,  Wply = 3.24000e-004,  Wplz = 1.55268e-004
         Iyy  = 2.51000e-005,  Izz  = 9.25000e-006,  Iyz  = 0.00000e+000
         iy   = 7.45000e-002,  iz   = 4.52000e-002
         J    = 1.14513e-007,  Cwp  = 6.02109e-008

      *. DESIGN PARAMETERS FOR STRENGTH EVALUATION :
         Ly   = 3.13000e+000,  Lz   = 1.56500e+000,  Lb   = 1.56500e+000
         Ky   = 1.00000e+000,  Kz   = 1.00000e+000

      *. MATERIAL PROPERTIES :
         Fy   = 2.75000e+005,  Es   = 2.10000e+008,  MATERIAL NAME  = S275


      *. FORCES AND MOMENTS AT (1/2) POINT :
         Axial Force      Fxx = 0.00000e+000
         Shear Forces     Fyy = 0.00000e+000,  Fzz = 2.47246e+001
         Bending Moments  My  = 3.92491e+001,  Mz  = 0.00000e+000
         End Moments      Myi = 0.00000e+000,  Myj = 3.92491e+001  (for Lb)
                          Myi = 0.00000e+000,  Myj = 0.00000e+000  (for Ly)
                          Mzi = 0.00000e+000,  Mzj = 0.00000e+000  (for Lz)

      *. Sign conventions for stress and axial force.
         - Stress : Compression positive.
         - Axial force: Tension positive.


=========================================================================================
   [[[*]]]   CLASSIFY LEFT-TOP FLANGE OF SECTION (BTR).
=========================================================================================

      ( ). Determine classification of compression outstand flanges.
           [ Eurocode3:05 Table 5.2 (Sheet 2 of 3), EN 1993-1-5 ]
           -. e      = SQRT( 235/fy )  =    0.92
           -. b/t    = BTR =    7.58
           -. sigma1 =  121139.280 KPa.
           -. sigma2 =  121139.280 KPa.
           -. BTR < 9*e  ( Class 1 : Plastic ).
```

```
-----------------------------------------------------------------------------------------
 midas Gen - Steel Code Checking  [ Eurocode3:05 ]                          Gen 2019
=========================================================================================


=========================================================================================
   [[[*]]]   CLASSIFY RIGHT-TOP FLANGE OF SECTION (BTR).
=========================================================================================

      ( ). Determine classification of compression outstand flanges.
           [ Eurocode3:05 Table 5.2 (Sheet 2 of 3), EN 1993-1-5 ]
           -. e      = SQRT( 235/fy )  =    0.92
           -. b/t    = BTR =    7.58
           -. sigma1 =  121139.280 KPa.
           -. sigma2 =  121139.280 KPa.
           -. BTR < 9*e  ( Class 1 : Plastic ).

=========================================================================================
   [[[*]]]   CLASSIFY LEFT-BOTTOM FLANGE OF SECTION (BTR).
=========================================================================================

      ( ). Determine classification of tension outstand flanges.
           -. Not Checking the Section Classification.

=========================================================================================
   [[[*]]]   CLASSIFY RIGHT-BOTTOM FLANGE OF SECTION (BTR).
=========================================================================================

      ( ). Determine classification of tension outstand flanges.
           -. Not Checking the Section Classification.

=========================================================================================
   [[[*]]]   CLASSIFY WEB OF SECTION (HTR).
=========================================================================================

      ( ). Determine classification of bending Internal Parts.
           [ Eurocode3:05 Table 5.2 (Sheet 1 of 3), EN 1993-1-5 ]
           -. e      = SQRT( 235/fy )  =    0.92
           -. d/t    = HTR =   20.33
           -. sigma1 =   86426.855 KPa.
           -. sigma2 =  -86426.855 KPa.
           -. HTR < 72*e  ( Class 1 : Plastic ).

=========================================================================================
   [[[*]]]   APPLIED FACTORS.
=========================================================================================

      ( ). Partial Factors (Gamma_Mi).
           [ Eurocode3:05 6.1 ]
           -. Gamma_M0 =  1.05
           -. Gamma_M1 =  1.05
           -. Gamma_M2 =  1.25

=========================================================================================
   [[[*]]]   CHECK AXIAL RESISTANCE.
=========================================================================================
```

```
-----------------------------------------------------------------------------------------
 midas Gen - Steel Code Checking  [ Eurocode3:05 ]                          Gen 2019
=========================================================================================


      ( ). Check slenderness ratio of axial tension member (l/i).
           -. l/i  =    42.0  <   300.0  --->  O.K.

      ( ). Calculate parameters for combined resistance.
           -. Lambda1   = Pi * SQRT(Es/fy)   =  86.815
           -. Lambda_bz = (KLz/iz) / Lambda1 =   0.399

      ( ). Calculate axial tensile resistance (Nt_Rd).
         [ Eurocode3:05  6.2.3 ]
           -. Nt_Rd  = fy * Area / Gamma_M0 =       1186.43 kN.

      ( ). Check ratio of axial resistance (N_Ed/Nt_Rd).
               N_Ed              0.00
           -. -----  =  ---------------  =  0.000  <  1.000  --->  O.K.
              Nt_Rd            1186.43

=========================================================================================
   [[[*]]]   CHECK SHEAR RESISTANCE.
=========================================================================================

      ( ). Calculate shear area.
           [ Eurocode3:05  6.2.6, EN1993-1-5:04 5.1 NOTE 2 ]
           -. eta   = 1.2 (Fy < 460 MPa.)
           -. r     =    0.0150 m.
           -. Avy   = Area - hw*tw                 =        0.0036 m^2.
           -. Avz1  = eta*hw*tw                    =        0.0011 m^2.
           -. Avz2  = Area - 2*B*tf + (tw + 2*r)*tf =       0.0015 m^2.
           -. Avz   = MAX[ Avz1, Avz2 ]            =        0.0015 m^2.

      ( ). Calculate plastic shear resistance in local-z direction (Vpl_Rdz).
           [ Eurocode3:05  6.1, 6.2.6 ]
           -. Vpl_Rdz = [ Avz*fy/SQRT(3) ] / Gamma_M0 =        219.56 kN.

      ( ). Shear Buckling Check.
           [ Eurocode3:05 6.2.6 ]
           -. HTR < 72*e/Eta   --->  No need to check!

      ( ). Check ratio of shear resistance (V_Edz/Vpl_Rdz).
           ( LCB =    1, POS =    J )
           -. Applied shear force : V_Edz   =         25.43 kN.
               V_Edz              25.43
           -. -------  =  ---------------  =  0.116  <  1.000  --->  O.K.
              Vpl_Rdz           219.56

=========================================================================================
   [[[*]]]   CHECK BENDING MOMENT RESISTANCE ABOUT MAJOR AXIS.
=========================================================================================
```

```
-----------------------------------------------------------------------------------------
 midas Gen - Steel Code Checking  [ Eurocode3:05 ]                          Gen 2019
=========================================================================================


      ( ). Calculate plastic resistance moment about major axis.
           [ Eurocode3:05  6.1, 6.2.5 ]
           -. Wply     =        0.0003 m^3.
           -. Mc_Rdy   = Wply * fy / Gamma_M0 =         84.86 kN-m.

      ( ). Check ratio of moment resistance (M_Edy/Mc_Rdy).
               M_Edy              39.25
           -. ------  =  ---------------  =  0.463  <  1.000  --->  O.K.
              Mc_Rdy              84.86

=========================================================================================
   [[[*]]]   CHECK BENDING MOMENT RESISTANCE ABOUT MINOR AXIS.
=========================================================================================

      ( ). Calculate plastic resistance moment about minor axis.
           [ Eurocode3:05  6.1, 6.2.5 ]
           -. Wplz     =        0.0002 m^3.
           -. Mc_Rdz   = Wplz * fy / Gamma_M0 =         40.67 kN-m.

      ( ). Check ratio of moment resistance (M_Edz/Mc_Rdz).
              M_Edz                0.00
           -. ------  =  ---------------  =  0.000  <  1.000  --->  O.K.
              Mc_Rdz              40.67

=========================================================================================
   [[[*]]]   CHECK LATERAL-TORSIONAL BUCKLING RESISTANCE.
=========================================================================================

      ( ). Calculate lateral-torsional buckling resistance (Mb_Rd).
           [ Eurocode3:05  6.1, 6.3.2 ]
           -. Por       =   0.300
           -. Gs        = Es / [ 2*(1+Por) ]  =80769230.769 KPa.
           -. Ncr       = Pi^2*Es*Izz / Lu^2  =       7827.66 kN.
           -. psi       =   0.000
           -. C1        =   1.132
           -. Mcr       = C1 * Ncr * SQRT [ (Cwp/Izz) + (Gs*Ixx)/Ncr ] =        777.08 kN-m.

           -. Lambda_LT_bar  = SQRT [ Wply*fy / Mcr ] =   0.339
           -. Lambda_LT_bar0 =    0.400

           -. Lambda_LT_bar =    0.339 < Lambda_LT_bar0   =    0.400
           -. M_Ed/Mcr      =    0.051 < Lambda_LT_bar0^2 =    0.160
           If Lambda_LT_bar < Lambda_LT_bar0 or M_Ed/Mcr < Lambda_LT_bar0^2,
           No allowance for lateral-torsional buckling necessary.

=========================================================================================
   [[[*]]]   CHECK INTERACTION OF COMBINED RESISTANCE.
=========================================================================================
```

```
-----------------------------------------------------------------------------------------
 midas Gen - Steel Code Checking  [ Eurocode3:05 ]                          Gen 2019
=========================================================================================


      ( ). Calculate Major reduced design resistance of bending and shear.
           [ Eurocode3:05  6.2.8 (6.30) ]
           -. In case of V_Edz / Vpl_Rdz < 0.5
           -. My_Rd = Mc_Rdy =         84.86 kN-m.

      ( ). Calculate Minor reduced design resistance of bending and shear.
           [ Eurocode3:05  6.2.8 (6.30) ]
           -. In case of V_Edy / Vpl_Rdy < 0.5
           -. Mz_Rd = Mc_Rdz =         40.67 kN-m.

      ( ). Check general interaction ratio.
           [ Eurocode3:05  6.2.1 (6.2) ] - Class1 or Class2
                        N_Ed     M_Edy     M_Edz
           -. Rmax1  = ------ + ------- + -------
                        N_Rd     My_Rd     Mz_Rd
                     =  0.463  <  1.000  --->  O.K.

      ( ). Check interaction ratio of bending and axial force member.
           [ Eurocode3:05  6.2.9 (6.31 ~ 6.41) ] - Class1 or Class2
           -. n      = N_Ed / Npl_Rd   =  0.000
           -. a      = MIN[ (Area-2b*tf)/Area, 0.5 ] =  0.245
           -. Alpha  =  2.000
           -. Beta   = MAX[ 5*n, 1.0 ] =  1.000

           -. N_Ed < 0.25*Npl_Rd           =        296.61 kN.
           -. N_Ed < 0.5*hw*tw*fy/Gamma_M0 =        119.43 kN.
              Therefore, No allowance for the effect of axial force.
           -. Mny_Rd = Mply_Rd        =         84.86 kN-m.
           -. Rmaxy  = M_Edy / Mny_Rd =  0.463  <  1.000  --->  O.K.

           -. N_Ed < hw*tw*fy/Gamma_M0 =        378.19 kN.
              Therefore, No allowance for the effect of axial force.
           -. Mnz_Rd = Mplz_Rd        =          40.67 kN-m.
           -. Rmaxz  = M_Edz / Mnz_Rd =  0.000  <  1.000  --->  O.K.

           -. Rmax2  = MAX[ Rmaxy, Rmaxz ] =  0.463  <  1.000  --->  O.K.

           -. Rmax   = MAX[ Rmax1, Rmax2 ] =  0.463  <  1.000  --->  O.K.

=========================================================================================
   [[[*]]]   CHECK DEFLECTION.
=========================================================================================

      ( ). Compute Maximum Deflection.
           -. LCB      =    2
           -. DAF      =     1.000 (Deflection Amplification Factor).
           -. Position =     1.565m From i-end(Node 3).
           -. Def      =    -0.005 * DAF =   -0.005m (Global Z)
           -. Def_Lim  =     0.016m
              Def < Def_Lim   --->  O.K !
```

```
-----------------------------------------------------------------------------------------
 midas Gen - Steel Code Checking  [ Eurocode3:05 ]                          Gen 2019
=========================================================================================


      *. PROJECT     :
      *. MEMBER NO   =      3,  ELEMENT TYPE = Beam
      *. LOADCOMB NO =      1,  MATERIAL NO  =     1,  SECTION NO =     1
      *. UNIT SYSTEM : kN, m

      *. SECTION PROPERTIES : Designation = HEA180
         Shape     = I - Section. (Rolled)
         Depth     =      0.171,  Top F Width =      0.180,  Bot.F Width =      0.180
         Web Thick =      0.006,  Top F Thick =      0.009,  Bot.F Thick =      0.009

         Area = 4.53000e-003,  Avy  = 3.61800e-003,  Avz  = 1.45200e-003
         Ybar = 9.00000e-002,  Zbar = 8.55000e-002,  Qyb  = 2.59018e-002,  Qzb  = 4.05000e-003
         Wely = 2.94000e-004,  Welz = 1.03000e-004,  Wply = 3.24000e-004,  Wplz = 1.55268e-004
         Iyy  = 2.51000e-005,  Izz  = 9.25000e-006,  Iyz  = 0.00000e+000
         iy   = 7.45000e-002,  iz   = 4.52000e-002
         J    = 1.14513e-007,  Cwp  = 6.02109e-008

      *. DESIGN PARAMETERS FOR STRENGTH EVALUATION :
         Ly   = 3.13000e+000,  Lz   = 1.56500e+000,  Lb   = 1.56500e+000
         Ky   = 1.00000e+000,  Kz   = 1.00000e+000

      *. MATERIAL PROPERTIES :
         Fy   = 2.75000e+005,  Es   = 2.10000e+008,  MATERIAL NAME  = S275


      *. FORCES AND MOMENTS AT (1/2) POINT :
         Axial Force      Fxx = 0.00000e+000
         Shear Forces     Fyy = 0.00000e+000,  Fzz = 1.30703e+001
         Bending Moments  My  = 2.10101e+001,  Mz  = 0.00000e+000
         End Moments      Myi = 0.00000e+000,  Myj = 2.10101e+001  (for Lb)
                          Myi = 0.00000e+000,  Myj = 0.00000e+000  (for Ly)
                          Mzi = 0.00000e+000,  Mzj = 0.00000e+000  (for Lz)

      *. Sign conventions for stress and axial force.
         - Stress : Compression positive.
         - Axial force: Tension positive.


=========================================================================================
   [[[*]]]   CLASSIFY LEFT-TOP FLANGE OF SECTION (BTR).
=========================================================================================

      ( ). Determine classification of compression outstand flanges.
           [ Eurocode3:05 Table 5.2 (Sheet 2 of 3), EN 1993-1-5 ]
           -. e      = SQRT( 235/fy )  =    0.92
           -. b/t    = BTR =    7.58
           -. sigma1 =   64846.051 KPa.
           -. sigma2 =   64846.051 KPa.
           -. BTR < 9*e  ( Class 1 : Plastic ).
```

```
-----------------------------------------------------------------------------------------
 midas Gen - Steel Code Checking  [ Eurocode3:05 ]                          Gen 2019
=========================================================================================


=========================================================================================
   [[[*]]]   CLASSIFY RIGHT-TOP FLANGE OF SECTION (BTR).
=========================================================================================

      ( ). Determine classification of compression outstand flanges.
           [ Eurocode3:05 Table 5.2 (Sheet 2 of 3), EN 1993-1-5 ]
           -. e      = SQRT( 235/fy )  =    0.92
           -. b/t    = BTR =    7.58
           -. sigma1 =   64846.051 KPa.
           -. sigma2 =   64846.051 KPa.
           -. BTR < 9*e  ( Class 1 : Plastic ).

=========================================================================================
   [[[*]]]   CLASSIFY LEFT-BOTTOM FLANGE OF SECTION (BTR).
=========================================================================================

      ( ). Determine classification of tension outstand flanges.
           -. Not Checking the Section Classification.

=========================================================================================
   [[[*]]]   CLASSIFY RIGHT-BOTTOM FLANGE OF SECTION (BTR).
=========================================================================================

      ( ). Determine classification of tension outstand flanges.
           -. Not Checking the Section Classification.

=========================================================================================
   [[[*]]]   CLASSIFY WEB OF SECTION (HTR).
=========================================================================================

      ( ). Determine classification of bending Internal Parts.
           [ Eurocode3:05 Table 5.2 (Sheet 1 of 3), EN 1993-1-5 ]
           -. e      = SQRT( 235/fy )  =    0.92
           -. d/t    = HTR =   20.33
           -. sigma1 =   46264.434 KPa.
           -. sigma2 =  -46264.434 KPa.
           -. HTR < 72*e  ( Class 1 : Plastic ).

=========================================================================================
   [[[*]]]   APPLIED FACTORS.
=========================================================================================

      ( ). Partial Factors (Gamma_Mi).
           [ Eurocode3:05 6.1 ]
           -. Gamma_M0 =  1.05
           -. Gamma_M1 =  1.05
           -. Gamma_M2 =  1.25

=========================================================================================
   [[[*]]]   CHECK AXIAL RESISTANCE.
=========================================================================================
```

```
-----------------------------------------------------------------------------------------
 midas Gen - Steel Code Checking  [ Eurocode3:05 ]                          Gen 2019
=========================================================================================


      ( ). Check slenderness ratio of axial tension member (l/i).
           -. l/i  =    42.0  <   300.0  --->  O.K.

      ( ). Calculate parameters for combined resistance.
           -. Lambda1   = Pi * SQRT(Es/fy)   =  86.815
           -. Lambda_bz = (KLz/iz) / Lambda1 =   0.399

      ( ). Calculate axial tensile resistance (Nt_Rd).
         [ Eurocode3:05  6.2.3 ]
           -. Nt_Rd  = fy * Area / Gamma_M0 =       1186.43 kN.

      ( ). Check ratio of axial resistance (N_Ed/Nt_Rd).
               N_Ed               0.00
           -. -----  =  ---------------  =  0.000  <  1.000  --->  O.K.
              Nt_Rd            1186.43

=========================================================================================
   [[[*]]]   CHECK SHEAR RESISTANCE.
=========================================================================================

      ( ). Calculate shear area.
           [ Eurocode3:05  6.2.6, EN1993-1-5:04 5.1 NOTE 2 ]
           -. eta   = 1.2 (Fy < 460 MPa.)
           -. r     =    0.0150 m.
           -. Avy   = Area - hw*tw                  =        0.0036 m^2.
           -. Avz1  = eta*hw*tw                     =        0.0011 m^2.
           -. Avz2  = Area - 2*B*tf + (tw + 2*r)*tf =        0.0015 m^2.
           -. Avz   = MAX[ Avz1, Avz2 ]             =        0.0015 m^2.

      ( ). Calculate plastic shear resistance in local-z direction (Vpl_Rdz).
           [ Eurocode3:05  6.1, 6.2.6 ]
           -. Vpl_Rdz = [ Avz*fy/SQRT(3) ] / Gamma_M0 =        219.56 kN.

      ( ). Shear Buckling Check.
           [ Eurocode3:05 6.2.6 ]
           -. HTR < 72*e/Eta   --->  No need to check!

      ( ). Check ratio of shear resistance (V_Edz/Vpl_Rdz).
           ( LCB =    1, POS =    J )
           -. Applied shear force : V_Edz   =         13.78 kN.
               V_Edz              13.78
           -. -------  =  ---------------  =  0.063  <  1.000  --->  O.K.
              Vpl_Rdz           219.56

=========================================================================================
   [[[*]]]   CHECK BENDING MOMENT RESISTANCE ABOUT MAJOR AXIS.
=========================================================================================
```

```
-----------------------------------------------------------------------------------------
 midas Gen - Steel Code Checking  [ Eurocode3:05 ]                          Gen 2019
=========================================================================================


      ( ). Calculate plastic resistance moment about major axis.
           [ Eurocode3:05  6.1, 6.2.5 ]
           -. Wply     =        0.0003 m^3.
           -. Mc_Rdy   = Wply * fy / Gamma_M0 =         84.86 kN-m.

      ( ). Check ratio of moment resistance (M_Edy/Mc_Rdy).
               M_Edy              21.01
           -. ------  =  ---------------  =  0.248  <  1.000  --->  O.K.
              Mc_Rdy              84.86

=========================================================================================
   [[[*]]]   CHECK BENDING MOMENT RESISTANCE ABOUT MINOR AXIS.
=========================================================================================

      ( ). Calculate plastic resistance moment about minor axis.
           [ Eurocode3:05  6.1, 6.2.5 ]
           -. Wplz     =        0.0002 m^3.
           -. Mc_Rdz   = Wplz * fy / Gamma_M0 =         40.67 kN-m.

      ( ). Check ratio of moment resistance (M_Edz/Mc_Rdz).
              M_Edz                0.00
           -. ------  =  ---------------  =  0.000  <  1.000  --->  O.K.
              Mc_Rdz              40.67

=========================================================================================
   [[[*]]]   CHECK LATERAL-TORSIONAL BUCKLING RESISTANCE.
=========================================================================================

      ( ). Calculate lateral-torsional buckling resistance (Mb_Rd).
           [ Eurocode3:05  6.1, 6.3.2 ]
           -. Por       =   0.300
           -. Gs        = Es / [ 2*(1+Por) ]  =80769230.769 KPa.
           -. Ncr       = Pi^2*Es*Izz / Lu^2  =       7827.66 kN.
           -. psi       =   0.000
           -. C1        =   1.132
           -. Mcr       = C1 * Ncr * SQRT [ (Cwp/Izz) + (Gs*Ixx)/Ncr ] =        777.08 kN-m.

           -. Lambda_LT_bar  = SQRT [ Wply*fy / Mcr ] =   0.339
           -. Lambda_LT_bar0 =    0.400

           -. Lambda_LT_bar =    0.339 < Lambda_LT_bar0   =    0.400
           -. M_Ed/Mcr      =    0.027 < Lambda_LT_bar0^2 =    0.160
           If Lambda_LT_bar < Lambda_LT_bar0 or M_Ed/Mcr < Lambda_LT_bar0^2,
           No allowance for lateral-torsional buckling necessary.

=========================================================================================
   [[[*]]]   CHECK INTERACTION OF COMBINED RESISTANCE.
=========================================================================================
```

```
-----------------------------------------------------------------------------------------
 midas Gen - Steel Code Checking  [ Eurocode3:05 ]                          Gen 2019
=========================================================================================


      ( ). Calculate Major reduced design resistance of bending and shear.
           [ Eurocode3:05  6.2.8 (6.30) ]
           -. In case of V_Edz / Vpl_Rdz < 0.5
           -. My_Rd = Mc_Rdy =         84.86 kN-m.

      ( ). Calculate Minor reduced design resistance of bending and shear.
           [ Eurocode3:05  6.2.8 (6.30) ]
           -. In case of V_Edy / Vpl_Rdy < 0.5
           -. Mz_Rd = Mc_Rdz =         40.67 kN-m.

      ( ). Check general interaction ratio.
           [ Eurocode3:05  6.2.1 (6.2) ] - Class1 or Class2
                        N_Ed     M_Edy     M_Edz
           -. Rmax1  = ------ + ------- + -------
                        N_Rd     My_Rd     Mz_Rd
                     =  0.248  <  1.000  --->  O.K.

      ( ). Check interaction ratio of bending and axial force member.
           [ Eurocode3:05  6.2.9 (6.31 ~ 6.41) ] - Class1 or Class2
           -. n      = N_Ed / Npl_Rd   =  0.000
           -. a      = MIN[ (Area-2b*tf)/Area, 0.5 ] =  0.245
           -. Alpha  =  2.000
           -. Beta   = MAX[ 5*n, 1.0 ] =  1.000

           -. N_Ed < 0.25*Npl_Rd           =        296.61 kN.
           -. N_Ed < 0.5*hw*tw*fy/Gamma_M0 =        119.43 kN.
              Therefore, No allowance for the effect of axial force.
           -. Mny_Rd = Mply_Rd        =         84.86 kN-m.
           -. Rmaxy  = M_Edy / Mny_Rd =  0.248  <  1.000  --->  O.K.

           -. N_Ed < hw*tw*fy/Gamma_M0 =        378.19 kN.
              Therefore, No allowance for the effect of axial force.
           -. Mnz_Rd = Mplz_Rd        =          40.67 kN-m.
           -. Rmaxz  = M_Edz / Mnz_Rd =  0.000  <  1.000  --->  O.K.

           -. Rmax2  = MAX[ Rmaxy, Rmaxz ] =  0.248  <  1.000  --->  O.K.

           -. Rmax   = MAX[ Rmax1, Rmax2 ] =  0.248  <  1.000  --->  O.K.

=================================================================================
   [[[*]]]   CHECK DEFLECTION.
=================================================================================

      ( ). Compute Maximum Deflection.
           -. LCB      =    2
           -. DAF      =     1.000 (Deflection Amplification Factor).
           -. Position =     1.565m From i-end(Node 5).
           -. Def      =    -0.003 * DAF =   -0.003m (Global Z)
           -. Def_Lim  =     0.016m
              Def < Def_Lim   --->  O.K !
```

```
-----------------------------------------------------------------------------------------
 midas Gen - Steel Code Checking  [ Eurocode3:05 ]                          Gen 2019
=========================================================================================


      *. PROJECT     :
      *. MEMBER NO   =      8,  ELEMENT TYPE = Beam
      *. LOADCOMB NO =      1,  MATERIAL NO  =     1,  SECTION NO =     1
      *. UNIT SYSTEM : kN, m

      *. SECTION PROPERTIES : Designation = HEA180
         Shape     = I - Section. (Rolled)
         Depth     =      0.171,  Top F Width =      0.180,  Bot.F Width =      0.180
         Web Thick =      0.006,  Top F Thick =      0.009,  Bot.F Thick =      0.009

         Area = 4.53000e-003,  Avy  = 3.61800e-003,  Avz  = 1.45200e-003
         Ybar = 9.00000e-002,  Zbar = 8.55000e-002,  Qyb  = 2.59018e-002,  Qzb  = 4.05000e-003
         Wely = 2.94000e-004,  Welz = 1.03000e-004,  Wply = 3.24000e-004,  Wplz = 1.55268e-004
         Iyy  = 2.51000e-005,  Izz  = 9.25000e-006,  Iyz  = 0.00000e+000
         iy   = 7.45000e-002,  iz   = 4.52000e-002
         J    = 1.14513e-007,  Cwp  = 6.02109e-008

      *. DESIGN PARAMETERS FOR STRENGTH EVALUATION :
         Ly   = 4.28000e+000,  Lz   = 4.28000e+000,  Lb   = 4.28000e+000
         Ky   = 1.00000e+000,  Kz   = 1.00000e+000

      *. MATERIAL PROPERTIES :
         Fy   = 2.75000e+005,  Es   = 2.10000e+008,  MATERIAL NAME  = S275


      *. FORCES AND MOMENTS AT (1/2) POINT :
         Axial Force      Fxx = 0.00000e+000
         Shear Forces     Fyy = 0.00000e+000,  Fzz = 0.00000e+000
         Bending Moments  My  = 2.49402e+001,  Mz  = 0.00000e+000
         End Moments      Myi = 0.00000e+000,  Myj = 0.00000e+000  (for Lb)
                          Myi = 0.00000e+000,  Myj = 0.00000e+000  (for Ly)
                          Mzi = 0.00000e+000,  Mzj = 0.00000e+000  (for Lz)

      *. Sign conventions for stress and axial force.
         - Stress : Compression positive.
         - Axial force: Tension positive.


=========================================================================================
   [[[*]]]   CLASSIFY LEFT-TOP FLANGE OF SECTION (BTR).
=========================================================================================

      ( ). Determine classification of compression outstand flanges.
           [ Eurocode3:05 Table 5.2 (Sheet 2 of 3), EN 1993-1-5 ]
           -. e      = SQRT( 235/fy )  =    0.92
           -. b/t    = BTR =    7.58
           -. sigma1 =   76976.046 KPa.
           -. sigma2 =   76976.046 KPa.
           -. BTR < 9*e  ( Class 1 : Plastic ).
```

```
-----------------------------------------------------------------------------------------
 midas Gen - Steel Code Checking  [ Eurocode3:05 ]                          Gen 2019
=========================================================================================


=========================================================================================
   [[[*]]]   CLASSIFY RIGHT-TOP FLANGE OF SECTION (BTR).
=========================================================================================

      ( ). Determine classification of compression outstand flanges.
           [ Eurocode3:05 Table 5.2 (Sheet 2 of 3), EN 1993-1-5 ]
           -. e      = SQRT( 235/fy )  =    0.92
           -. b/t    = BTR =    7.58
           -. sigma1 =   76976.046 KPa.
           -. sigma2 =   76976.046 KPa.
           -. BTR < 9*e  ( Class 1 : Plastic ).

=========================================================================================
   [[[*]]]   CLASSIFY LEFT-BOTTOM FLANGE OF SECTION (BTR).
=========================================================================================

      ( ). Determine classification of tension outstand flanges.
           -. Not Checking the Section Classification.

=========================================================================================
   [[[*]]]   CLASSIFY RIGHT-BOTTOM FLANGE OF SECTION (BTR).
=========================================================================================

      ( ). Determine classification of tension outstand flanges.
           -. Not Checking the Section Classification.

=========================================================================================
   [[[*]]]   CLASSIFY WEB OF SECTION (HTR).
=========================================================================================

      ( ). Determine classification of bending Internal Parts.
           [ Eurocode3:05 Table 5.2 (Sheet 1 of 3), EN 1993-1-5 ]
           -. e      = SQRT( 235/fy )  =    0.92
           -. d/t    = HTR =   20.33
           -. sigma1 =   54918.582 KPa.
           -. sigma2 =  -54918.582 KPa.
           -. HTR < 72*e  ( Class 1 : Plastic ).

=========================================================================================
   [[[*]]]   APPLIED FACTORS.
=========================================================================================

      ( ). Partial Factors (Gamma_Mi).
           [ Eurocode3:05 6.1 ]
           -. Gamma_M0 =  1.05
           -. Gamma_M1 =  1.05
           -. Gamma_M2 =  1.25

=========================================================================================
   [[[*]]]   CHECK AXIAL RESISTANCE.
=========================================================================================
```

```
-----------------------------------------------------------------------------------------
 midas Gen - Steel Code Checking  [ Eurocode3:05 ]                          Gen 2019
=========================================================================================


      ( ). Check slenderness ratio of axial tension member (l/i).
           -. l/i  =    94.7  <   300.0  --->  O.K.

      ( ). Calculate parameters for combined resistance.
           -. Lambda1   = Pi * SQRT(Es/fy)   =  86.815
           -. Lambda_bz = (KLz/iz) / Lambda1 =   1.091

      ( ). Calculate axial tensile resistance (Nt_Rd).
         [ Eurocode3:05  6.2.3 ]
           -. Nt_Rd  = fy * Area / Gamma_M0 =       1186.43 kN.

      ( ). Check ratio of axial resistance (N_Ed/Nt_Rd).
               N_Ed               0.00
           -. -----  =  ---------------  =  0.000  <  1.000  --->  O.K.
              Nt_Rd            1186.43

=========================================================================================
   [[[*]]]   CHECK SHEAR RESISTANCE.
=========================================================================================

      ( ). Calculate shear area.
           [ Eurocode3:05  6.2.6, EN1993-1-5:04 5.1 NOTE 2 ]
           -. eta   = 1.2 (Fy < 460 MPa.)
           -. r     =    0.0150 m.
           -. Avy   = Area - hw*tw                  =        0.0036 m^2.
           -. Avz1  = eta*hw*tw                     =        0.0011 m^2.
           -. Avz2  = Area - 2*B*tf + (tw + 2*r)*tf =        0.0015 m^2.
           -. Avz   = MAX[ Avz1, Avz2 ]             =        0.0015 m^2.

      ( ). Calculate plastic shear resistance in local-z direction (Vpl_Rdz).
           [ Eurocode3:05  6.1, 6.2.6 ]
           -. Vpl_Rdz = [ Avz*fy/SQRT(3) ] / Gamma_M0 =        219.56 kN.

      ( ). Shear Buckling Check.
           [ Eurocode3:05 6.2.6 ]
           -. HTR < 72*e/Eta   --->  No need to check!

      ( ). Check ratio of shear resistance (V_Edz/Vpl_Rdz).
           ( LCB =    1, POS =    J )
           -. Applied shear force : V_Edz   =         23.31 kN.
               V_Edz              23.31
           -. -------  =  ---------------  =  0.106  <  1.000  --->  O.K.
              Vpl_Rdz           219.56

=========================================================================================
   [[[*]]]   CHECK BENDING MOMENT RESISTANCE ABOUT MAJOR AXIS.
=========================================================================================
```

```
-----------------------------------------------------------------------------------------
 midas Gen - Steel Code Checking  [ Eurocode3:05 ]                          Gen 2019
=========================================================================================


      ( ). Calculate plastic resistance moment about major axis.
           [ Eurocode3:05  6.1, 6.2.5 ]
           -. Wply     =        0.0003 m^3.
           -. Mc_Rdy   = Wply * fy / Gamma_M0 =         84.86 kN-m.

      ( ). Check ratio of moment resistance (M_Edy/Mc_Rdy).
               M_Edy              24.94
           -. ------  =  ---------------  =  0.294  <  1.000  --->  O.K.
              Mc_Rdy              84.86

=========================================================================================
   [[[*]]]   CHECK BENDING MOMENT RESISTANCE ABOUT MINOR AXIS.
=========================================================================================

      ( ). Calculate plastic resistance moment about minor axis.
           [ Eurocode3:05  6.1, 6.2.5 ]
           -. Wplz     =        0.0002 m^3.
           -. Mc_Rdz   = Wplz * fy / Gamma_M0 =         40.67 kN-m.

      ( ). Check ratio of moment resistance (M_Edz/Mc_Rdz).
              M_Edz                0.00
           -. ------  =  ---------------  =  0.000  <  1.000  --->  O.K.
              Mc_Rdz              40.67

=========================================================================================
   [[[*]]]   CHECK LATERAL-TORSIONAL BUCKLING RESISTANCE.
=========================================================================================

      ( ). Calculate lateral-torsional buckling resistance (Mb_Rd).
           [ Eurocode3:05  6.1, 6.3.2 ]
           -. Por       =   0.300
           -. Gs        = Es / [ 2*(1+Por) ]  =80769230.769 KPa.
           -. Ncr       = Pi^2*Es*Izz / Lu^2  =       1046.58 kN.
           -. psi       =   0.000
           -. C1        =   1.132
           -. Mcr       = C1 * Ncr * SQRT [ (Cwp/Izz) + (Gs*Ixx)/Ncr ] =        146.77 kN-m.

           -. Lambda_LT_bar  = SQRT [ Wply*fy / Mcr ] =   0.779
           -. Lambda_LT_bar0 =    0.400

           -. Lambda_LT_bar =    0.779 > Lambda_LT_bar0   =    0.400
           -. M_Ed/Mcr      =    0.170 > Lambda_LT_bar0^2 =    0.160
           If Lambda_LT_bar > Lambda_LT_bar0 and M_Ed/Mcr > Lambda_LT_bar0^2,
           Allowance for lateral-torsional buckling necessary.

           -. Alpha_LT  =   0.210
           -. Phi_LT    = 0.5 * { 1+Alpha_LT*(Lambda_LT_bar-0.2) + Lambda_LT_bar^2 }   =   0.864
           -. Xi_LT     = MIN [ 1 / {Phi_LT + SQRT(Phi_LT^2 - Lambda_LT_bar^2)}, 1.0 ] =   0.807
           -. Mb_Rd     = Xi_LT*Wply*fy / Gamma_M1 =         68.51 kN-m.
```

```
-----------------------------------------------------------------------------------------
 midas Gen - Steel Code Checking  [ Eurocode3:05 ]                          Gen 2019
=========================================================================================


      ( ). Check ratio of lateral-torsional buckling resistance (M_Edy/Mb_Rdy).
               M_Edy                24.94
           -. --------  =  ---------------  =  0.364  <  1.000  --->  O.K.
               Mb_Rdy               68.51

=========================================================================================
   [[[*]]]   CHECK INTERACTION OF COMBINED RESISTANCE.
=========================================================================================

      ( ). Calculate Major reduced design resistance of bending and shear.
           [ Eurocode3:05  6.2.8 (6.30) ]
           -. In case of V_Edz / Vpl_Rdz < 0.5
           -. My_Rd = Mc_Rdy =         84.86 kN-m.

      ( ). Calculate Minor reduced design resistance of bending and shear.
           [ Eurocode3:05  6.2.8 (6.30) ]
           -. In case of V_Edy / Vpl_Rdy < 0.5
           -. Mz_Rd = Mc_Rdz =         40.67 kN-m.

      ( ). Check general interaction ratio.
           [ Eurocode3:05  6.2.1 (6.2) ] - Class1 or Class2
                        N_Ed     M_Edy     M_Edz
           -. Rmax1  = ------ + ------- + -------
                        N_Rd     My_Rd     Mz_Rd
                     =  0.294  <  1.000  --->  O.K.

      ( ). Check interaction ratio of bending and axial force member.
           [ Eurocode3:05  6.2.9 (6.31 ~ 6.41) ] - Class1 or Class2
           -. n      = N_Ed / Npl_Rd   =  0.000
           -. a      = MIN[ (Area-2b*tf)/Area, 0.5 ] =  0.245
           -. Alpha  =  2.000
           -. Beta   = MAX[ 5*n, 1.0 ] =  1.000

           -. N_Ed < 0.25*Npl_Rd           =        296.61 kN.
           -. N_Ed < 0.5*hw*tw*fy/Gamma_M0 =        119.43 kN.
              Therefore, No allowance for the effect of axial force.
           -. Mny_Rd = Mply_Rd        =         84.86 kN-m.
           -. Rmaxy  = M_Edy / Mny_Rd =  0.294  <  1.000  --->  O.K.

           -. N_Ed < hw*tw*fy/Gamma_M0 =        378.19 kN.
              Therefore, No allowance for the effect of axial force.
           -. Mnz_Rd = Mplz_Rd        =          40.67 kN-m.
           -. Rmaxz  = M_Edz / Mnz_Rd =  0.000  <  1.000  --->  O.K.

           -. Rmax2  = MAX[ Rmaxy, Rmaxz ] =  0.294  <  1.000  --->  O.K.

           -. Rmax   = MAX[ Rmax1, Rmax2 ] =  0.294  <  1.000  --->  O.K.
```

```
-------------------------------------------------------------------------------------------
 midas Gen - Steel Code Checking  [ Eurocode3:05 ]                          Gen 2019
===========================================================================================


=============================================================================================
   [[[*]]]   CHECK DEFLECTION.
=============================================================================================

      ( ). Compute Maximum Deflection.
           -. LCB      =    2
           -. DAF      =     1.000 (Deflection Amplification Factor).
           -. Position =     2.140m From i-end(Node 7).
           -. Def      =    -0.007 * DAF =   -0.007m (Global Z)
           -. Def_Lim  =     0.021m
              Def < Def_Lim   --->  O.K !
```

```
-----------------------------------------------------------------------------------------
 midas Gen - Steel Code Checking  [ Eurocode3:05 ]                          Gen 2019
=========================================================================================


      *. PROJECT     :
      *. MEMBER NO   =      9,  ELEMENT TYPE = Beam
      *. LOADCOMB NO =      1,  MATERIAL NO  =     1,  SECTION NO =     1
      *. UNIT SYSTEM : kN, m

      *. SECTION PROPERTIES : Designation = HEA180
         Shape     = I - Section. (Rolled)
         Depth     =      0.171,  Top F Width =      0.180,  Bot.F Width =      0.180
         Web Thick =      0.006,  Top F Thick =      0.009,  Bot.F Thick =      0.009

         Area = 4.53000e-003,  Avy  = 3.61800e-003,  Avz  = 1.45200e-003
         Ybar = 9.00000e-002,  Zbar = 8.55000e-002,  Qyb  = 2.59018e-002,  Qzb  = 4.05000e-003
         Wely = 2.94000e-004,  Welz = 1.03000e-004,  Wply = 3.24000e-004,  Wplz = 1.55268e-004
         Iyy  = 2.51000e-005,  Izz  = 9.25000e-006,  Iyz  = 0.00000e+000
         iy   = 7.45000e-002,  iz   = 4.52000e-002
         J    = 1.14513e-007,  Cwp  = 6.02109e-008

      *. DESIGN PARAMETERS FOR STRENGTH EVALUATION :
         Ly   = 4.80000e+000,  Lz   = 4.80000e+000,  Lb   = 4.80000e+000
         Ky   = 1.00000e+000,  Kz   = 1.00000e+000

      *. MATERIAL PROPERTIES :
         Fy   = 2.75000e+005,  Es   = 2.10000e+008,  MATERIAL NAME  = S275


      *. FORCES AND MOMENTS AT (1/2) POINT :
         Axial Force      Fxx = 0.00000e+000
         Shear Forces     Fyy = 0.00000e+000,  Fzz = 0.00000e+000
         Bending Moments  My  = 3.13686e+001,  Mz  = 0.00000e+000
         End Moments      Myi = 0.00000e+000,  Myj = 0.00000e+000  (for Lb)
                          Myi = 0.00000e+000,  Myj = 0.00000e+000  (for Ly)
                          Mzi = 0.00000e+000,  Mzj = 0.00000e+000  (for Lz)

      *. Sign conventions for stress and axial force.
         - Stress : Compression positive.
         - Axial force: Tension positive.


=========================================================================================
   [[[*]]]   CLASSIFY LEFT-TOP FLANGE OF SECTION (BTR).
=========================================================================================

      ( ). Determine classification of compression outstand flanges.
           [ Eurocode3:05 Table 5.2 (Sheet 2 of 3), EN 1993-1-5 ]
           -. e      = SQRT( 235/fy )  =    0.92
           -. b/t    = BTR =    7.58
           -. sigma1 =   96816.757 KPa.
           -. sigma2 =   96816.757 KPa.
           -. BTR < 9*e  ( Class 1 : Plastic ).
```

```
-----------------------------------------------------------------------------------------
 midas Gen - Steel Code Checking  [ Eurocode3:05 ]                          Gen 2019
=========================================================================================


=========================================================================================
   [[[*]]]   CLASSIFY RIGHT-TOP FLANGE OF SECTION (BTR).
=========================================================================================

      ( ). Determine classification of compression outstand flanges.
           [ Eurocode3:05 Table 5.2 (Sheet 2 of 3), EN 1993-1-5 ]
           -. e      = SQRT( 235/fy )  =    0.92
           -. b/t    = BTR =    7.58
           -. sigma1 =   96816.757 KPa.
           -. sigma2 =   96816.757 KPa.
           -. BTR < 9*e  ( Class 1 : Plastic ).

=========================================================================================
   [[[*]]]   CLASSIFY LEFT-BOTTOM FLANGE OF SECTION (BTR).
=========================================================================================

      ( ). Determine classification of tension outstand flanges.
           -. Not Checking the Section Classification.

=========================================================================================
   [[[*]]]   CLASSIFY RIGHT-BOTTOM FLANGE OF SECTION (BTR).
=========================================================================================

      ( ). Determine classification of tension outstand flanges.
           -. Not Checking the Section Classification.

=========================================================================================
   [[[*]]]   CLASSIFY WEB OF SECTION (HTR).
=========================================================================================

      ( ). Determine classification of bending Internal Parts.
           [ Eurocode3:05 Table 5.2 (Sheet 1 of 3), EN 1993-1-5 ]
           -. e      = SQRT( 235/fy )  =    0.92
           -. d/t    = HTR =   20.33
           -. sigma1 =   69073.944 KPa.
           -. sigma2 =  -69073.944 KPa.
           -. HTR < 72*e  ( Class 1 : Plastic ).

=========================================================================================
   [[[*]]]   APPLIED FACTORS.
=========================================================================================

      ( ). Partial Factors (Gamma_Mi).
           [ Eurocode3:05 6.1 ]
           -. Gamma_M0 =  1.05
           -. Gamma_M1 =  1.05
           -. Gamma_M2 =  1.25

=========================================================================================
   [[[*]]]   CHECK AXIAL RESISTANCE.
=========================================================================================
```

```
-----------------------------------------------------------------------------------------
 midas Gen - Steel Code Checking  [ Eurocode3:05 ]                          Gen 2019
=========================================================================================


      ( ). Check slenderness ratio of axial tension member (l/i).
           -. l/i  =   106.2  <   300.0  --->  O.K.

      ( ). Calculate parameters for combined resistance.
           -. Lambda1   = Pi * SQRT(Es/fy)   =  86.815
           -. Lambda_bz = (KLz/iz) / Lambda1 =   1.223

      ( ). Calculate axial tensile resistance (Nt_Rd).
         [ Eurocode3:05  6.2.3 ]
           -. Nt_Rd  = fy * Area / Gamma_M0 =       1186.43 kN.

      ( ). Check ratio of axial resistance (N_Ed/Nt_Rd).
               N_Ed              0.00
           -. -----  =  ---------------  =  0.000  <  1.000  --->  O.K.
              Nt_Rd            1186.43

=========================================================================================
   [[[*]]]   CHECK SHEAR RESISTANCE.
=========================================================================================

      ( ). Calculate shear area.
           [ Eurocode3:05  6.2.6, EN1993-1-5:04 5.1 NOTE 2 ]
           -. eta   = 1.2 (Fy < 460 MPa.)
           -. r     =    0.0150 m.
           -. Avy   = Area - hw*tw                  =        0.0036 m^2.
           -. Avz1  = eta*hw*tw                     =        0.0011 m^2.
           -. Avz2  = Area - 2*B*tf + (tw + 2*r)*tf =        0.0015 m^2.
           -. Avz   = MAX[ Avz1, Avz2 ]             =        0.0015 m^2.

      ( ). Calculate plastic shear resistance in local-z direction (Vpl_Rdz).
           [ Eurocode3:05  6.1, 6.2.6 ]
           -. Vpl_Rdz = [ Avz*fy/SQRT(3) ] / Gamma_M0 =        219.56 kN.

      ( ). Shear Buckling Check.
           [ Eurocode3:05 6.2.6 ]
           -. HTR < 72*e/Eta   --->  No need to check!

      ( ). Check ratio of shear resistance (V_Edz/Vpl_Rdz).
           ( LCB =    1, POS =    J )
           -. Applied shear force : V_Edz   =         26.14 kN.
               V_Edz              26.14
           -. -------  =  ---------------  =  0.119  <  1.000  --->  O.K.
              Vpl_Rdz           219.56

=========================================================================================
   [[[*]]]   CHECK BENDING MOMENT RESISTANCE ABOUT MAJOR AXIS.
=========================================================================================
```

```
-----------------------------------------------------------------------------------------
 midas Gen - Steel Code Checking  [ Eurocode3:05 ]                          Gen 2019
=========================================================================================


      ( ). Calculate plastic resistance moment about major axis.
           [ Eurocode3:05  6.1, 6.2.5 ]
           -. Wply     =        0.0003 m^3.
           -. Mc_Rdy   = Wply * fy / Gamma_M0 =         84.86 kN-m.

      ( ). Check ratio of moment resistance (M_Edy/Mc_Rdy).
               M_Edy              31.37
           -. ------  =  ---------------  =  0.370  <  1.000  --->  O.K.
              Mc_Rdy              84.86

=========================================================================================
   [[[*]]]   CHECK BENDING MOMENT RESISTANCE ABOUT MINOR AXIS.
=========================================================================================

      ( ). Calculate plastic resistance moment about minor axis.
           [ Eurocode3:05  6.1, 6.2.5 ]
           -. Wplz     =        0.0002 m^3.
           -. Mc_Rdz   = Wplz * fy / Gamma_M0 =         40.67 kN-m.

      ( ). Check ratio of moment resistance (M_Edz/Mc_Rdz).
              M_Edz                0.00
           -. ------  =  ---------------  =  0.000  <  1.000  --->  O.K.
              Mc_Rdz              40.67

=========================================================================================
   [[[*]]]   CHECK LATERAL-TORSIONAL BUCKLING RESISTANCE.
=========================================================================================

      ( ). Calculate lateral-torsional buckling resistance (Mb_Rd).
           [ Eurocode3:05  6.1, 6.3.2 ]
           -. Por       =   0.300
           -. Gs        = Es / [ 2*(1+Por) ]  =80769230.769 KPa.
           -. Ncr       = Pi^2*Es*Izz / Lu^2  =        832.11 kN.
           -. psi       =   0.000
           -. C1        =   1.132
           -. Mcr       = C1 * Ncr * SQRT [ (Cwp/Izz) + (Gs*Ixx)/Ncr ] =        125.05 kN-m.

           -. Lambda_LT_bar  = SQRT [ Wply*fy / Mcr ] =   0.844
           -. Lambda_LT_bar0 =    0.400

           -. Lambda_LT_bar =    0.844 > Lambda_LT_bar0   =    0.400
           -. M_Ed/Mcr      =    0.251 > Lambda_LT_bar0^2 =    0.160
           If Lambda_LT_bar > Lambda_LT_bar0 and M_Ed/Mcr > Lambda_LT_bar0^2,
           Allowance for lateral-torsional buckling necessary.

           -. Alpha_LT  =   0.210
           -. Phi_LT    = 0.5 * { 1+Alpha_LT*(Lambda_LT_bar-0.2) + Lambda_LT_bar^2 }   =   0.924
           -. Xi_LT     = MIN [ 1 / {Phi_LT + SQRT(Phi_LT^2 - Lambda_LT_bar^2)}, 1.0 ] =   0.770
           -. Mb_Rd     = Xi_LT*Wply*fy / Gamma_M1 =         65.30 kN-m.
```

```
-----------------------------------------------------------------------------------------
 midas Gen - Steel Code Checking  [ Eurocode3:05 ]                          Gen 2019
=========================================================================================


      ( ). Check ratio of lateral-torsional buckling resistance (M_Edy/Mb_Rdy).
               M_Edy                31.37
           -. --------  =  ---------------  =  0.480  <  1.000  --->  O.K.
               Mb_Rdy               65.30

=========================================================================================
   [[[*]]]   CHECK INTERACTION OF COMBINED RESISTANCE.
=========================================================================================

      ( ). Calculate Major reduced design resistance of bending and shear.
           [ Eurocode3:05  6.2.8 (6.30) ]
           -. In case of V_Edz / Vpl_Rdz < 0.5
           -. My_Rd = Mc_Rdy =         84.86 kN-m.

      ( ). Calculate Minor reduced design resistance of bending and shear.
           [ Eurocode3:05  6.2.8 (6.30) ]
           -. In case of V_Edy / Vpl_Rdy < 0.5
           -. Mz_Rd = Mc_Rdz =         40.67 kN-m.

      ( ). Check general interaction ratio.
           [ Eurocode3:05  6.2.1 (6.2) ] - Class1 or Class2
                        N_Ed     M_Edy     M_Edz
           -. Rmax1  = ------ + ------- + -------
                        N_Rd     My_Rd     Mz_Rd
                     =  0.370  <  1.000  --->  O.K.

      ( ). Check interaction ratio of bending and axial force member.
           [ Eurocode3:05  6.2.9 (6.31 ~ 6.41) ] - Class1 or Class2
           -. n      = N_Ed / Npl_Rd   =  0.000
           -. a      = MIN[ (Area-2b*tf)/Area, 0.5 ] =  0.245
           -. Alpha  =  2.000
           -. Beta   = MAX[ 5*n, 1.0 ] =  1.000

           -. N_Ed < 0.25*Npl_Rd           =        296.61 kN.
           -. N_Ed < 0.5*hw*tw*fy/Gamma_M0 =        119.43 kN.
              Therefore, No allowance for the effect of axial force.
           -. Mny_Rd = Mply_Rd        =         84.86 kN-m.
           -. Rmaxy  = M_Edy / Mny_Rd =  0.370  <  1.000  --->  O.K.

           -. N_Ed < hw*tw*fy/Gamma_M0 =        378.19 kN.
              Therefore, No allowance for the effect of axial force.
           -. Mnz_Rd = Mplz_Rd        =          40.67 kN-m.
           -. Rmaxz  = M_Edz / Mnz_Rd =  0.000  <  1.000  --->  O.K.

           -. Rmax2  = MAX[ Rmaxy, Rmaxz ] =  0.370  <  1.000  --->  O.K.

           -. Rmax   = MAX[ Rmax1, Rmax2 ] =  0.370  <  1.000  --->  O.K.
```

```
-------------------------------------------------------------------------------------------
 midas Gen - Steel Code Checking  [ Eurocode3:05 ]                          Gen 2019
===========================================================================================


=============================================================================================
   [[[*]]]   CHECK DEFLECTION.
=============================================================================================

      ( ). Compute Maximum Deflection.
           -. LCB      =    2
           -. DAF      =     1.000 (Deflection Amplification Factor).
           -. Position =     2.400m From i-end(Node 8).
           -. Def      =    -0.011 * DAF =   -0.011m (Global Z)
           -. Def_Lim  =     0.024m
              Def < Def_Lim   --->  O.K !
```

| | | | |
|---|---|---|---|
| Impresa: | | Pagina: | 1 |
| Progettista: | | Progetto: | |
| Indirizzo: | | Contratto N°: | |
| Telefono I Fax: | \| | Data: | 09/06/2020 |
| E-mail: | | | |

**Commenti del progettista:**

## 1 Dati da inserire

| | |
|---|---|
| **Tipo e dimensione dell'ancorante:** | **HIT-RE 500 V3 + HIT-V (8.8) M20** |
| Return period (service life in years): | 50 |
| Profondità di posa effettiva: | $h_{ef,act}$ = 200 mm ($h_{ef,limit}$ = - mm) |
| Materiale: | 8.8 |
| Certificazione No.: | ETA 16/0143 |
| Emesso I Valido: | 14/05/2019 \| - |
| Prova: | metodo di calcolo EN 1992-4, Chimico |
| Fissaggio distanziato: | $e_b$ = 0 mm (Senza distanziamento); t = 16 mm |
| Piastra d'ancoraggio: | $l_x$ x $l_y$ x t = 200 mm x 300 mm x 16 mm; (Spessore della piastra raccomandato: non calcolato |
| Profilo: | IPB / HEB, IPB 100 / HE 100 B; (L x W x T x FT) = 100 mm x 100 mm x 6 mm x 10 mm |
| Materiale base: | fessurato calcestruzzo, C25/30, $f_{c,cyl}$ = 25.00 N/mm$^2$; h = 500 mm, Temp. Breve/Lungo: 0/0 °C |
| **Installazione:** | **Foro eseguito con perforatore, Condizioni di installazione: asciutto** |
| Armatura: | nessuna armatura o interasse tra le armature >= 150 mm (qualunque Ø) o >= 100 mm (Ø <= 10 mm) senza armatura di bordo longitudinale |

[R] - Il calcolo dell'ancoraggio presuppone la presenza di una piastra di ancoraggio rigida.

**Geometria [mm] & Carichi [kN, kNm]**

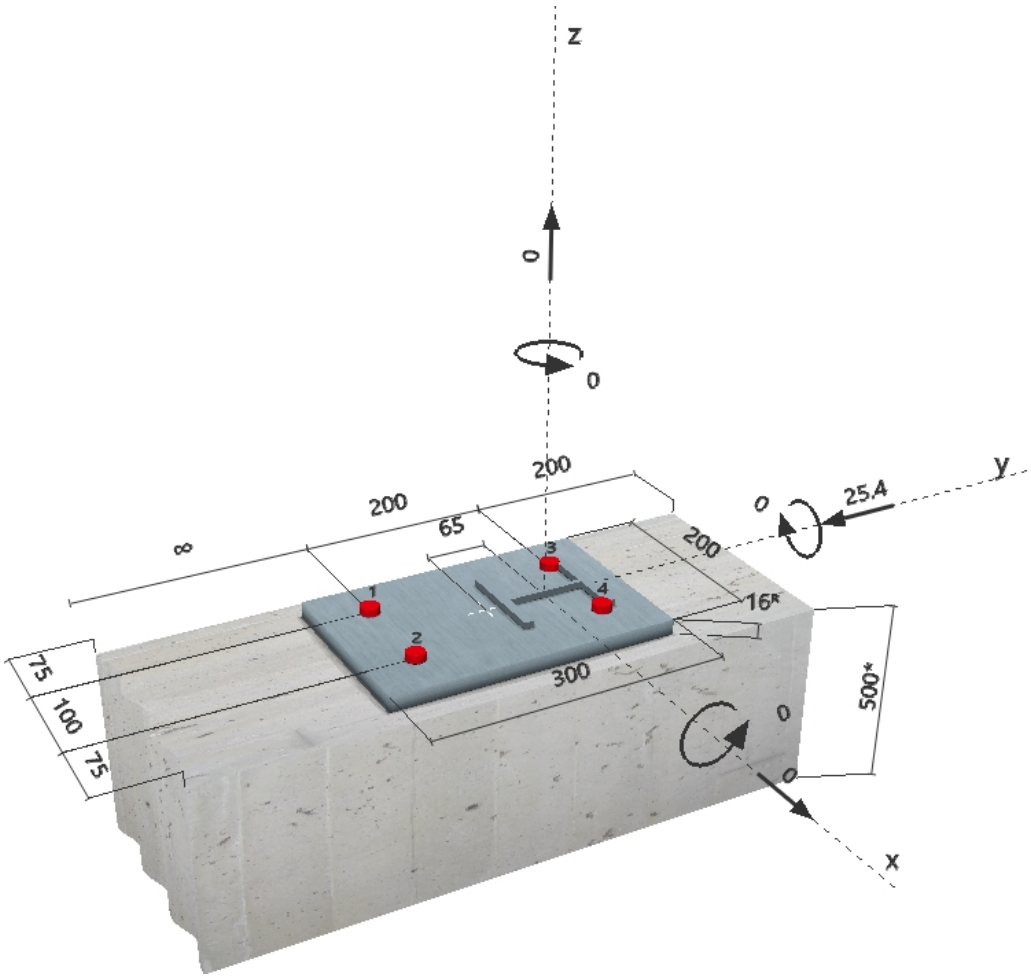



PROFIS Anchor ( c ) 2003-2009 Hilti AG, FL-9494 Schaan Hilti è un marchio registrato di Hilti AG, Schaan

| | | | |
|---|---|---|---|
| Impresa: | | Pagina: | 2 |
| Progettista: | | Progetto: | |
| Indirizzo: | | Contratto N°: | |
| Telefono I Fax: | \| | Data: | 09/06/2020 |
| E-mail: | | | |

### 1.1 Carichi permamenti

| $N_{sus}$ [kN] | $M_{x,sus}$ [kNm] | $M_{y,sus}$ [kNm] |
|---|---|---|
| 0.000 | 0.000 | 0.000 |

## 2 Condizione di carico/Carichi risultanti sull'ancorante (ULS)

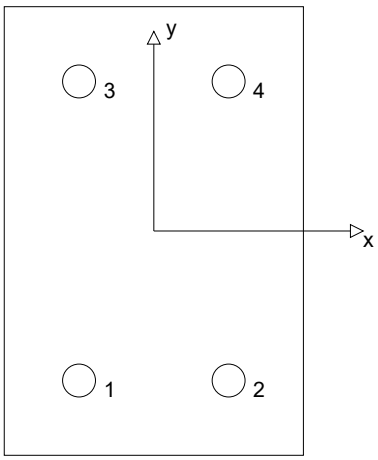


Condizione di carico: Carichi di progetto

**Carichi sull'ancorante [kN]**
Trazione: (+ Trazione, - Compressione)

| Ancorante | Trazione | Taglio | Taglio in dir. x | Taglio in dir. y |
|---|---|---|---|---|
| 1 | 0.000 | 6.350 | 0.000 | -6.350 |
| 2 | 0.000 | 6.350 | 0.000 | -6.350 |
| 3 | 0.000 | 6.350 | 0.000 | -6.350 |
| 4 | 0.000 | 6.350 | 0.000 | -6.350 |

Compressione max. nel calcestruzzo: - [‰]
Max. sforzo di compressione nel calcestruzzo: - [N/mm$^2$]
risultante delle forze di trazione nel (x/y)=(0/0): 0.000 [kN]
risultante delle forze di compressione (x/y)=(0/0): 0.000 [kN]

Le forze di ancoraggio vengono calcolate presupponendo una piastra di ancoraggio rigida.


PROFIS Anchor ( c ) 2003-2009 Hilti AG, FL-9494 Schaan Hilti è un marchio registrato di Hilti AG, Schaan

| | | | |
|---|---|---|---|
| Impresa: | | Pagina: | 3 |
| Progettista: | | Progetto: | |
| Indirizzo: | | Contratto N°: | |
| Telefono I Fax: | \| | Data: | 09/06/2020 |
| E-mail: | | | |

## 3 Carico di trazione (EN 1992-4, Sezione 7.2.1)

| | Carico [kN] | Resistenza [kN] | Utilizzo $\beta_N$ [%] | Stato |
|---|---|---|---|---|
| Rottura dell'acciaio* | N/A | N/A | N/A | N/A |
| Rottura combinata conica del calcestruzzo e per sfilamento** | N/A | N/A | N/A | N/A |
| Rottura conica del calcestruzzo** | N/A | N/A | N/A | N/A |
| Fessurazione** | N/A | N/A | N/A | N/A |

*ancorante più sollecitato **gruppo di ancoranti (ancoranti sollecitati)


PROFIS Anchor ( c ) 2003-2009 Hilti AG, FL-9494 Schaan Hilti è un marchio registrato di Hilti AG, Schaan

| | | | |
|---|---|---|---|
| Impresa: | | Pagina: | 4 |
| Progettista: | | Progetto: | |
| Indirizzo: | | Contratto N°: | |
| Telefono I Fax: | \| | Data: | 09/06/2020 |
| E-mail: | | | |

## 4 Carico di taglio (EN 1992-4, Sezione 7.2.2)

| | Carico [kN] | Resistenza [kN] | Utilizzo $\beta_V$ [%] | Stato |
|---|---|---|---|---|
| Rottura dell'acciaio (senza braccio di leva)* | 6.350 | 78.400 | 9 | OK |
| Rottura dell'acciaio (con braccio di leva)* | N/A | N/A | N/A | N/A |
| Rottura per pryout** | 25.400 | 60.201 | 43 | OK |
| Rottura del bordo del calcestruzzo in direzione x+** | 12.700 | 34.062 | 38 | OK |

*ancorante più sollecitato **gruppo di ancoranti (ancoranti specifici)

### 4.1 Rottura dell'acciaio (senza braccio di leva)

| $V^0_{Rk,s}$ [kN] | $k_7$ | $V_{Rk,s}$ [kN] | $\gamma_{M,s}$ | $V_{Rd,s}$ [kN] | $V_{Ed}$ [kN] |
|---|---|---|---|---|---|
| 98.000 | 1.000 | 98.000 | 1.250 | 78.400 | 6.350 |

### 4.2 Rottura per pryout (cono del calcestruzzo)

| $A_{c,N}$ [mm²] | $A^0_{c,N}$ [mm²] | $c_{cr,N}$ [mm] | $s_{cr,N}$ [mm] | $f_{c,cyl}$ [N/mm²] | $k_8$ |
|---|---|---|---|---|---|
| 150 000 | 160 000 | 300 | 600 | 25.00 | 2.000 |

| $h'_{ef}$ [mm] | $c'_{cr,N}$ [mm] | $s'_{cr,N}$ [mm] |
|---|---|---|
| 133 | 200 | 400 |

| $e_{c1,V}$ [mm] | $\psi_{ec1,N}$ | $e_{c2,V}$ [mm] | $\psi_{ec2,N}$ | $\psi_{s,N}$ | $\psi_{re,N}$ | $\psi_{M,N}$ |
|---|---|---|---|---|---|---|
| 0 | 1.000 | 0 | 1.000 | 0.813 | 1.000 | 1.000 |

| $k_1$ | $N^0_{Rk,c}$ [kN] | $\gamma_{M,c,p}$ | $V_{Rd,cp}$ [kN] | $V_{Ed}$ [kN] |
|---|---|---|---|---|
| 7.700 | 59.275 | 1.500 | 60.201 | 25.400 |

### 4.3 Rottura del bordo del calcestruzzo in direzione x+

| $l_f$ [mm] | $d_{nom}$ [mm] | $k_9$ | $\alpha$ | $\beta$ | $f_{c,cyl}$ [N/mm²] |
|---|---|---|---|---|---|
| 200 | 20.0 | 1.700 | 0.163 | 0.077 | 25.00 |

| $c_1$ [mm] | $A_{c,V}$ [mm²] | $A^0_{c,V}$ [mm²] |
|---|---|---|
| 75 | 47 813 | 25 313 |

| $\psi_{s,V}$ | $\psi_{h,V}$ | $\psi_{\alpha,V}$ | $e_{c,V}$ [mm] | $\psi_{ec,V}$ | $\psi_{re,V}$ |
|---|---|---|---|---|---|
| 1.000 | 1.000 | 2.000 | 0 | 1.000 | 1.000 |

| $V^0_{Rk,c}$ [kN] | $k_T$ | $\gamma_{M,c}$ | $V_{Rd,c}$ [kN] | $V_{Ed}$ [kN] |
|---|---|---|---|---|
| 13.524 | 1.0 | 1.500 | 34.062 | 12.700 |

## 5 Spostamenti (ancorante più sollecitato)

Carichi a breve termine:

$N_{Sk}$ = 0.000 [kN] $\delta_N$ = 0.000 [mm]

$V_{Sk}$ = 4.704 [kN] $\delta_V$ = 0.188 [mm]

$\delta_{NV}$ = 0.188 [mm]

Carichi a lungo termine:

$N_{Sk}$ = 0.000 [kN] $\delta_N$ = 0.000 [mm]

$V_{Sk}$ = 4.704 [kN] $\delta_V$ = 0.282 [mm]

$\delta_{NV}$ = 0.282 [mm]

Commenti: Gli spostamenti a trazione risultano validi con metà del valore della coppia di serraggio richiesta per non fessurato calcestruzzo! Gli spostamenti a taglio sono validi trascurando l'attrito tra il calcestruzzo e la piastra d'ancoraggio! Lo spazio derivante dal foro eseguito con perforatore e dalle tolleranze dei fori non viene considerato in questo calcolo!

Gli spostamenti ammissibili dell'ancorante dipendono dalla struttura fissata e devono essere definiti dal progettista!


PROFIS Anchor ( c ) 2003-2009 Hilti AG, FL-9494 Schaan Hilti è un marchio registrato di Hilti AG, Schaan

| | | | |
|---|---|---|---|
| Impresa: | | Pagina: | 5 |
| Progettista: | | Progetto: | |
| Indirizzo: | | Contratto N°: | |
| Telefono I Fax: | \| | Data: | 09/06/2020 |
| E-mail: | | | |

## 6 Attenzione

- Fenomeni di ridistribuzione dei carichi sugli ancoranti derivanti da eventuali deformazioni elastiche della piastra non sono presi in considerazione. Si assume una piastra di ancoraggio sufficientemente rigida in modo che non risulti deformabile sotto l'azione di carichi!
- La verifica del trasferimento dei carichi all'interno del materiale di base è richiesta in accordo con EN 1992-4, Allegato A!
- Il progetto è valido solo se le dimensioni del foro nell'elemento da fissare non è maggiore del valore dato in tabella 6.1 di EN 1992-4! Per diametri maggiori del foro vedere sezione 6.2.2 di EN 1992-4!
- La lista accessori inclusa in questo report di calcolo è da ritenersi solo come informativa dell'utente. In ogni caso, le istruzioni d'uso fornite con il prodotto dovranno essere rispettate per garantire una corretta installazione.
- Per la determinazione di Psi_re,v (rottura di bordo del calcestruzzo) si assume un copriferro per le armature di bordo c = 30 mm
- L'adesione chimica caratteristica dipende dalle temperature di breve e di lungo periodo.
- Contattare Hilti per verificare la fornitura delle barre HIT-V.
- L'armatura di bordo non è necessaria per evitare la modalità di rottura per fessurazione (splitting)
- The characteristic bond resistances depend on the return period (service life in years): 50

# L'ancoraggio risulta verificato!


PROFIS Anchor ( c ) 2003-2009 Hilti AG, FL-9494 Schaan Hilti è un marchio registrato di Hilti AG, Schaan

| | | | |
|---|---|---|---|
| Impresa: | | Pagina: | 6 |
| Progettista: | | Progetto: | |
| Indirizzo: | | Contratto N°: | |
| Telefono I Fax: | \| | Data: | 09/06/2020 |
| E-mail: | | | |

# 7 Dati relativi all'installazione

Piastra d'ancoraggio, acciaio: -
Profilo: IPB / HEB, IPB 100 / HE 100 B; (L x W x T x FT) = 100 mm x 100 mm x 6 mm x 10 mm
Diametro del foro nella piastra: $d_f$ = 22 mm
Spessore della piastra (input): 16 mm
Spessore della piastra raccomandato: non calcolato
Metodo di perforazione: Foro con perforazione a roto-percussione
Pulizia: E' necessaria una pulizia accurata del foro (Premium cleaning)

Tipo e dimensione dell'ancorante: HIT-RE 500 V3 + HIT-V (8.8) M20
Coppia di serraggio: 0.150 kNm

Diametro del foro nel materiale base: 22 mm
Profondità del foro nel materiale base: 200 mm
Spessore minimo del materiale base: 244 mm

## 7.1 Accessori richiesti

Perforazione
- Idoneo per rotopercussione
- Dimensione appropriata della punta del trapano

Pulizia
- Aria compressa con i relativi accessori necessari per soffiare a partire dal fondo del foro.
- Diametro appropriato dello scovolino

Posa
- Il dispenser include il portacartucce e il miscelatore
- Chiave dinamometrica

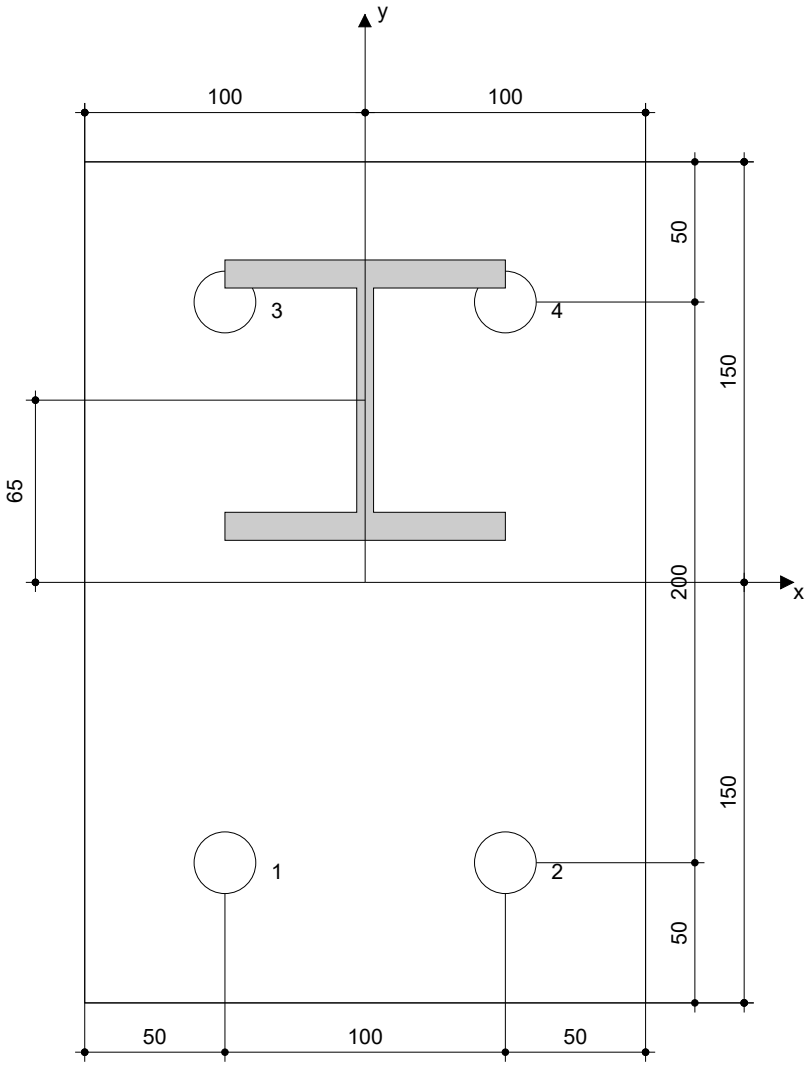


**Coordinate dell'ancorante [mm]**

| Ancorante | x | y | $c_{-x}$ | $c_{+x}$ | $c_{-y}$ | $c_{+y}$ |
|---|---|---|---|---|---|---|
| 1 | -50 | -100 | 75 | 175 | - | 400 |
| 2 | 50 | -100 | 175 | 75 | - | 400 |
| 3 | -50 | 100 | 75 | 175 | - | 200 |
| 4 | 50 | 100 | 175 | 75 | - | 200 |


PROFIS Anchor ( c ) 2003-2009 Hilti AG, FL-9494 Schaan Hilti è un marchio registrato di Hilti AG, Schaan

| | | | |
|---|---|---|---|
| Impresa: | | Pagina: | 7 |
| Progettista: | | Progetto: | |
| Indirizzo: | | Contratto N°: | |
| Telefono I Fax: | \| | Data: | 09/06/2020 |
| E-mail: | | | |

## 8 Osservazioni; doveri del cliente

- Tutte le informazioni e i dati contenuti nel Software riguardano solamente l'uso di prodotti Hilti e si basano su principi, formule e norme di sicurezza in conformità con le indicazioni tecniche, di funzionamento, montaggio e assemblaggio, ecc. della Hilti che devono essere rigorosamente rispettate da parte dell'utente. Tutt i valori in esso contenuti sono valori medi, quindi vanno effettuati test specifici prima di utilizzare il prodotto Hilti in questione. I risultati dei calcoli effettuati mediante il software si basano essenzialmente sui dati che l'utente ha inserito. Di conseguenza l'utente è l'unico responsabile per l'assenza di errori, la completezza e la pertinenza dei dati che vanno immessi. Inoltre, l'utente ha la responsabilità di far controllare e correggere i risultati dei calcoli da parte di un esperto, con particolare riguardo al rispetto di norme e autorizzazioni, prima di utilizzarli per uno scopo specifico. Il software serve solo come un compendio per interpretare le norme e i permessi, senza alcuna garanzia circa l'assenza di errori, la correttezza e la pertinenza dei risultati o di idoneità per una specifica applicazione.
- L'utente deve applicare tutti gli accorgimenti necessari e ragionevoli per prevenire o limitare i danni causati dal software. In particolare, l'utente deve organizzare un backup periodico dei programmi e dei dati e, se necessario, effettuare gli aggiornamenti del software offerti da Hilti in maniera regolare. Se non si utilizza la funzione di aggiornamento automatico del software, l'utente deve assicurarsi di utilizzare l'ultima versione e quindi di mantenere aggiornato il Software effettuando aggiornamenti manuali dal sito web Hilti. Hilti non è responsabile per le conseguenze derivanti da una violazione colposa di responsabilità da parte dell'utente, come il recupero di dati o programmi persi o danneggiati.


PROFIS Anchor ( c ) 2003-2009 Hilti AG, FL-9494 Schaan  Hilti è un marchio registrato di Hilti AG, Schaan